(12) INTERNATIONAL APPLICATION PUBLISHED UNDER THE PATENT COOPERATION TREATY (PCT)

(19) World Intellectual Property Organization
International Bureau

(43) International Publication Date
27 November 2008 (27.11.2008)

PCT

(10) International Publication Number
WO 2008/144402 A3

(51) International Patent Classification:
B01J 8/04 (2006.01) *B01J 23/66* (2006.01)
B01J 8/06 (2006.01) *B01J 23/68* (2006.01)
B01J 20/02 (2006.01) *B01J 27/24* (2006.01)
B01J 20/04 (2006.01) *B01J 27/25* (2006.01)
B01J 20/08 (2006.01) *C07D 301/10* (2006.01)
B01J 20/32 (2006.01) *B01D 53/04* (2006.01)
B01J 21/04 (2006.01)

(21) International Application Number:
PCT/US2008/063722

(22) International Filing Date: 15 May 2008 (15.05.2008)

(25) Filing Language: English

(26) Publication Language: English

(30) Priority Data:
60/938,890 18 May 2007 (18.05.2007) US

(71) Applicant *(for SM only)*: **SHELL OIL COMPANY** [US/US]; One Shell Plaza, P.O. Box 2463, Houston, TX 77252-2463 (US).

(71) Applicant *(for all designated States except US)*: **SHELL INTERNATIONALE RESEARCH MAATSCHAPPIJ B.V.** [NL/NL]; Carel van Bylandtlaan 30, NL-2596 HR The Hague (NL).

(72) Inventor; and

(75) Inventor/Applicant *(for US only)*: **MATUSZ, Marek** [US/US]; 14515 Meeting Lane, Houston, TX 77084 (US).

(74) Agent: **HOLTHUS, Lisa, K.**; Shell Oil Company, One Shell Plaza, P.O. Box 2463, Houston, TX 77252-2463 (US).

(81) Designated States *(unless otherwise indicated, for every kind of national protection available)*: AE, AG, AL, AM, AO, AT, AU, AZ, BA, BB, BG, BH, BR, BW, BY, BZ, CA, CH, CN, CO, CR, CU, CZ, DE, DK, DM, DO, DZ, EC, EE, EG, ES, FI, GB, GD, GE, GH, GM, GT, HN, HR, HU, ID, IL, IN, IS, JP, KE, KG, KM, KN, KP, KR, KZ, LA, LC, LK, LR, LS, LT, LU, LY, MA, MD, ME, MG, MK, MN, MW, MX, MY, MZ, NA, NG, NI, NO, NZ, OM, PG, PH, PL, PT, RO, RS, RU, SC, SD, SE, SG, SK, SL, SM, SV, SY, TJ, TM, TN, TR, TT, TZ, UA, UG, US, UZ, VC, VN, ZA, ZM, ZW.

[Continued on next page]

(54) Title: A REACTOR SYSTEM, AN ABSORBENT AND A PROCESS FOR REACTING A FEED

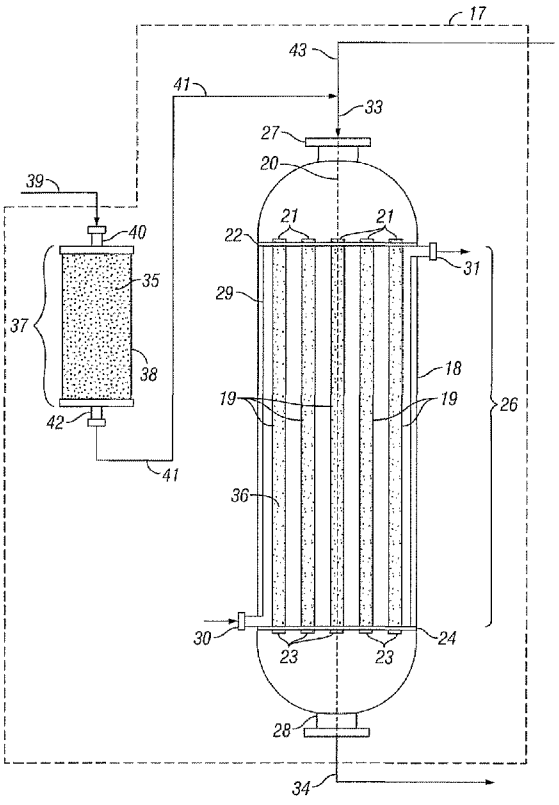

FIG. 1

(57) Abstract: The present invention provides a reactor system comprising: - one or more purification zones comprising an absorbent which comprises silver, an alkali or alkaline earth metal, and a support material having a surface area of more than 20 m2/g, and - a reaction zone comprising a catalyst, which reaction zone is positioned downstream from the one or more purification zones; an absorbent; a process for reacting a feed comprising one or more feed components; and a process for preparing a 1,2-diol, a 1,2-diol ether, a 1,2-carbonate, or an alkanolamine.

WO 2008/144402 A3

(84) Designated States *(unless otherwise indicated, for every kind of regional protection available)*: ARIPO (BW, GH, GM, KE, LS, MW, MZ, NA, SD, SL, SZ, TZ, UG, ZM, ZW), Eurasian (AM, AZ, BY, KG, KZ, MD, RU, TJ, TM), European (AT, BE, BG, CH, CY, CZ, DE, DK, EE, ES, FI, FR, GB, GR, HR, HU, IE, IS, IT, LT, LU, LV, MC, MT, NL, NO, PL, PT, RO, SE, SI, SK, TR), OAPI (BF, BJ, CF, CG, CI, CM, GA, GN, GQ, GW, ML, MR, NE, SN, TD, TG).

Published:

— *with international search report*

— *before the expiration of the time limit for amending the claims and to be republished in the event of receipt of amendments*

(88) Date of publication of the international search report:
9 April 2009