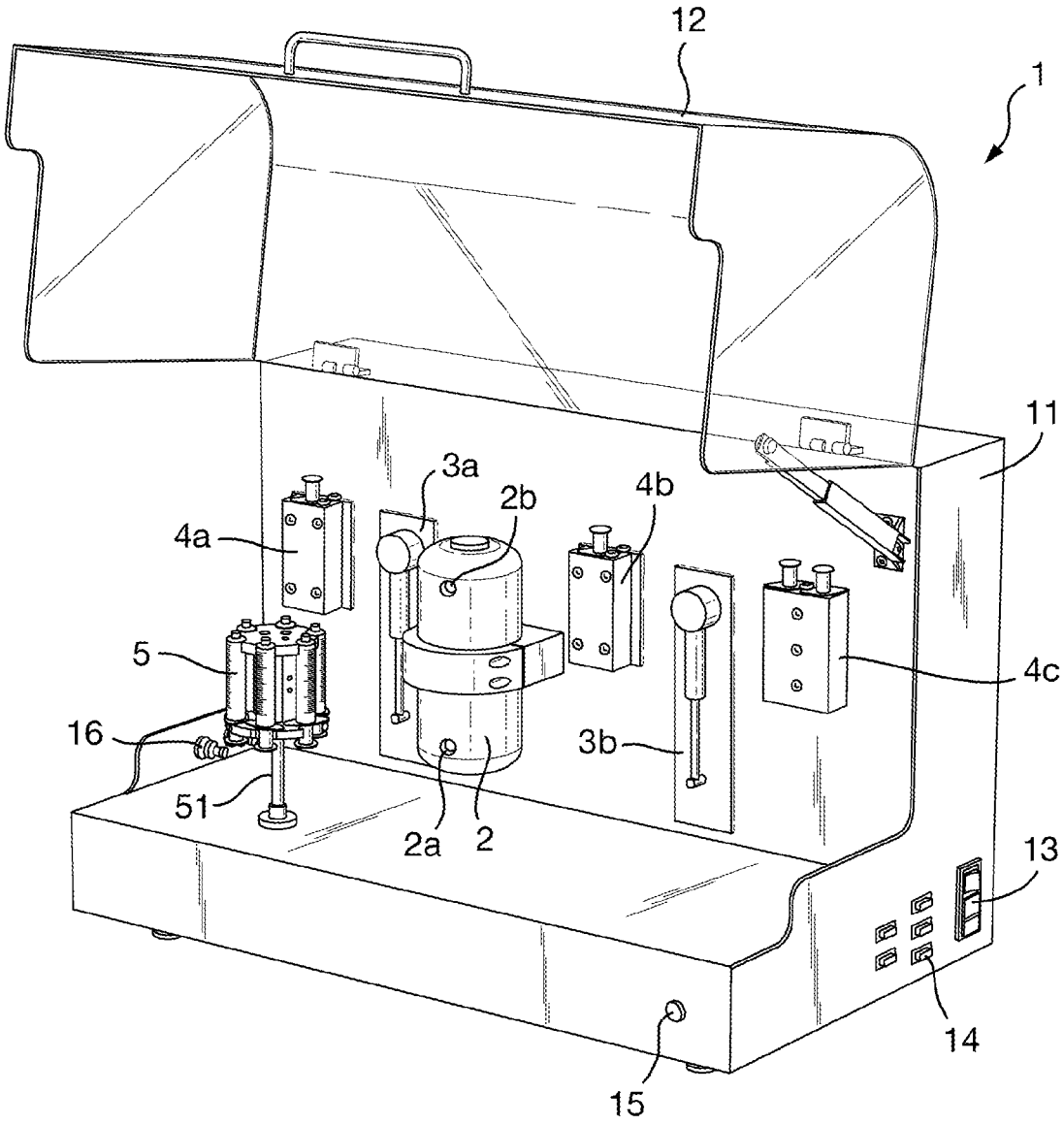

Fig. 1

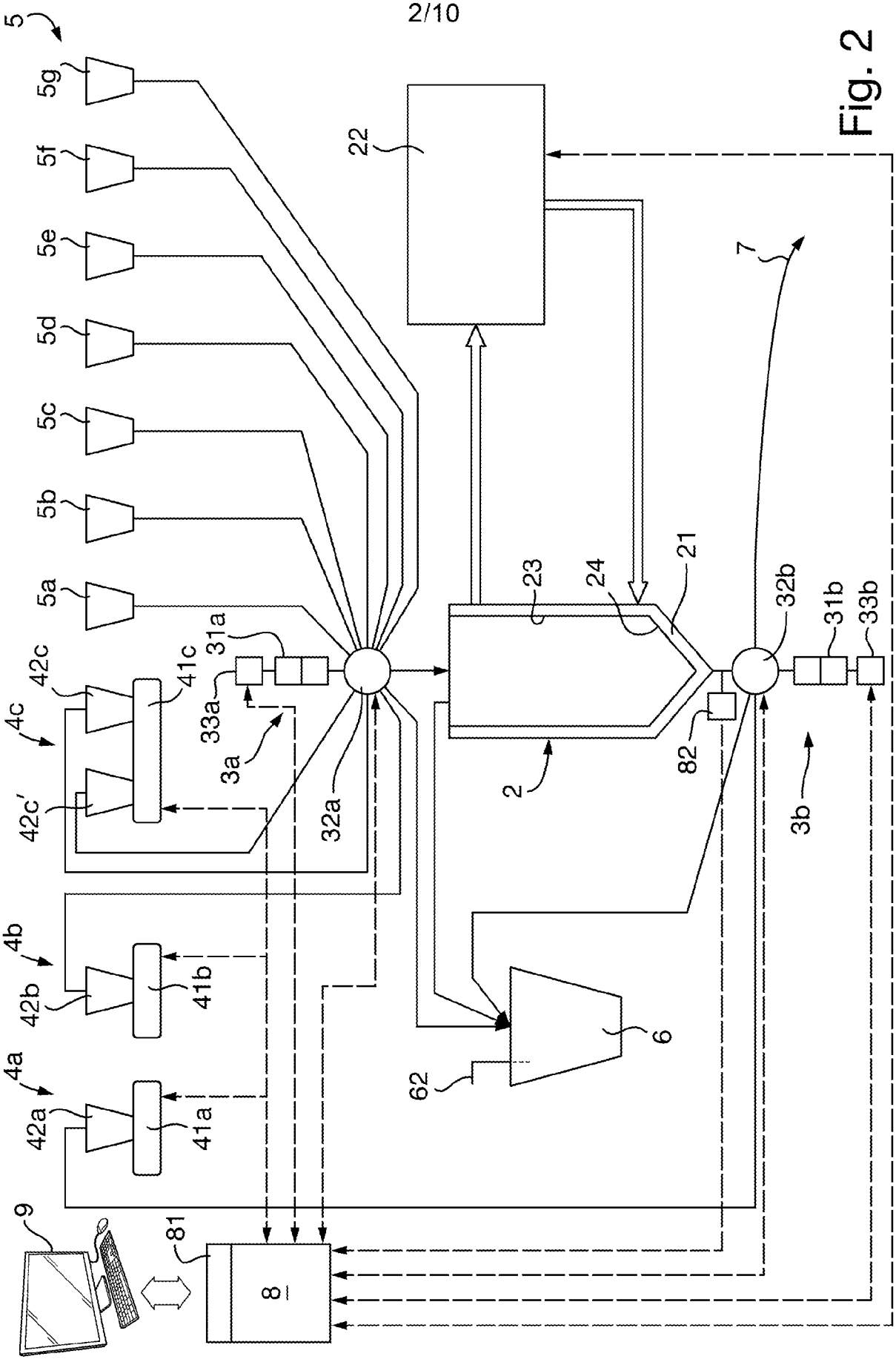
5
5g
5f
5e
5d
5c
5b
5a
22
7
23
24
21
32b
31b
33b
31a
33a
3a
32a
42c
41c
4c
42c'
2
82
3b
4b
42b
41b
6
62
4a
42a
41a
9
81
8

Fig. 2

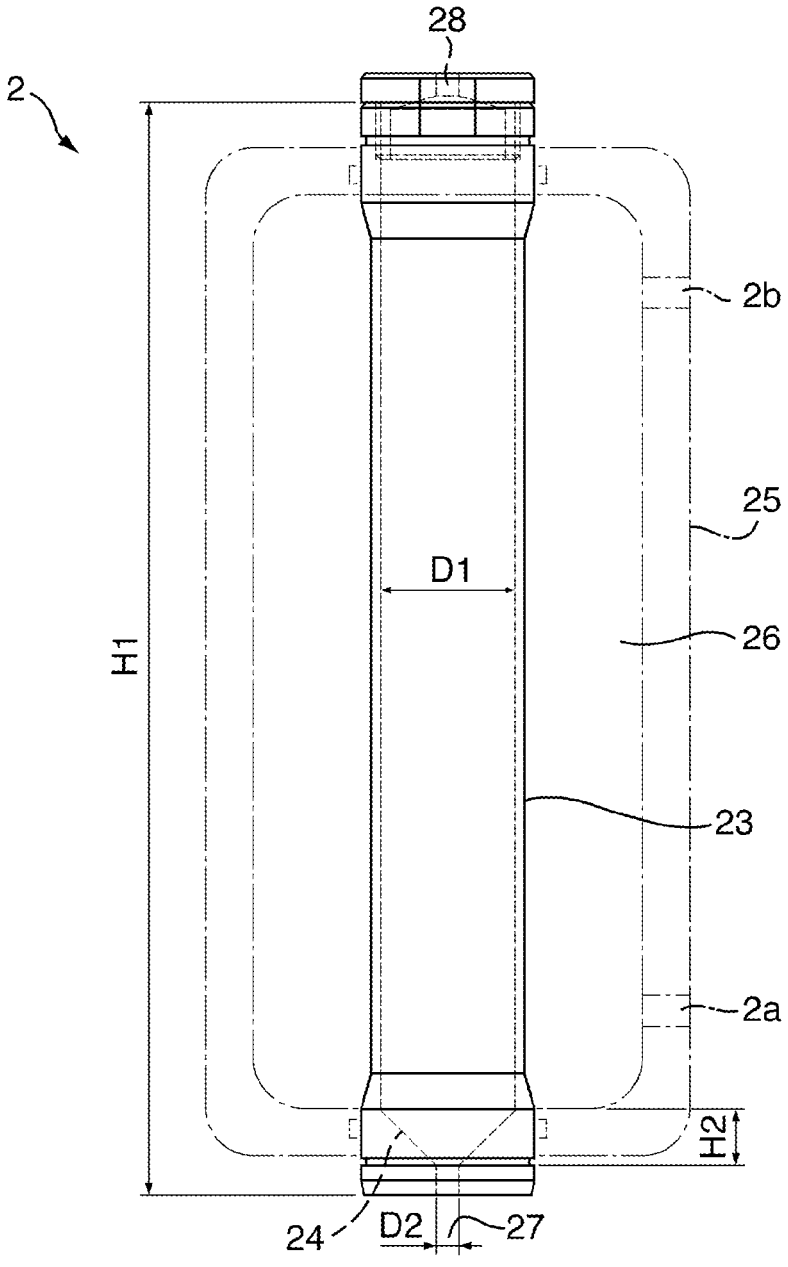

Fig. 3

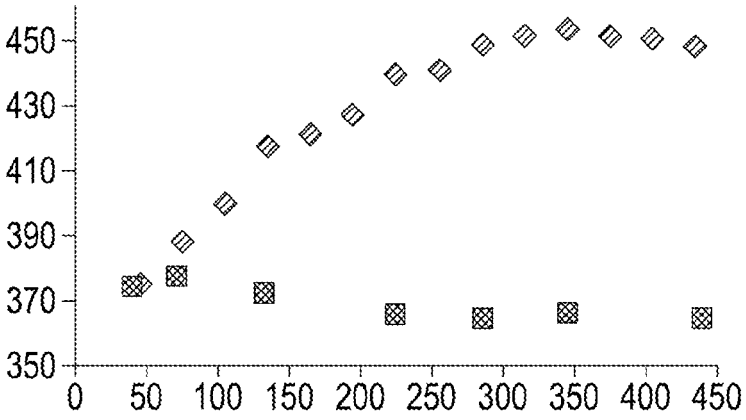

Fig. 4

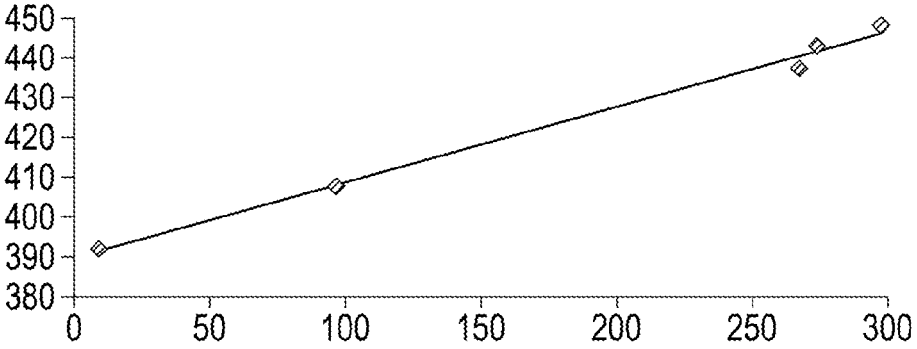

Fig. 5

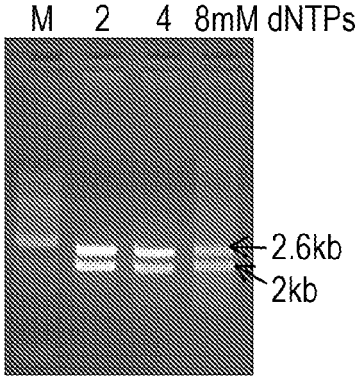

Fig. 6

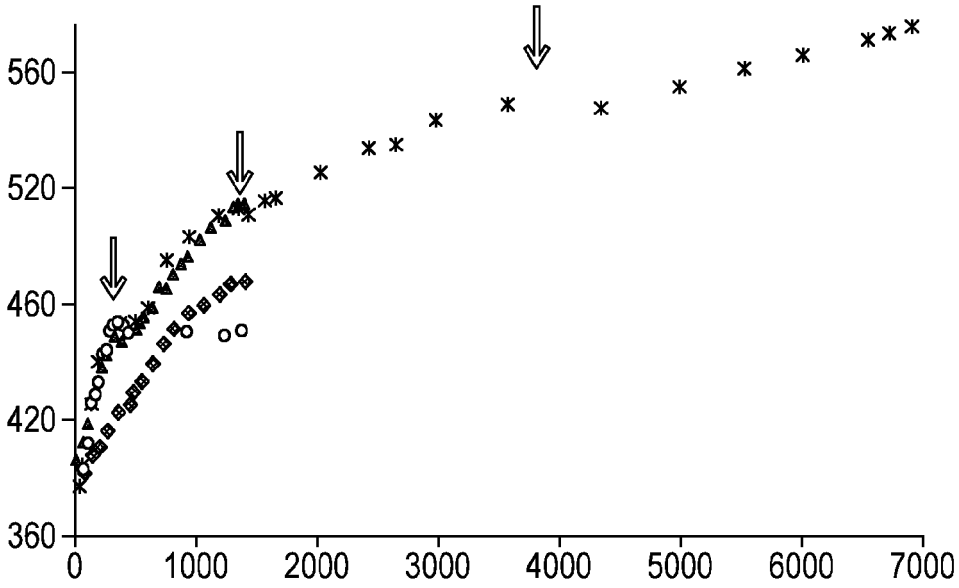
560
520
460
420
360
0
1000
2000
3000
4000
5000
6000
7000

Fig. 7

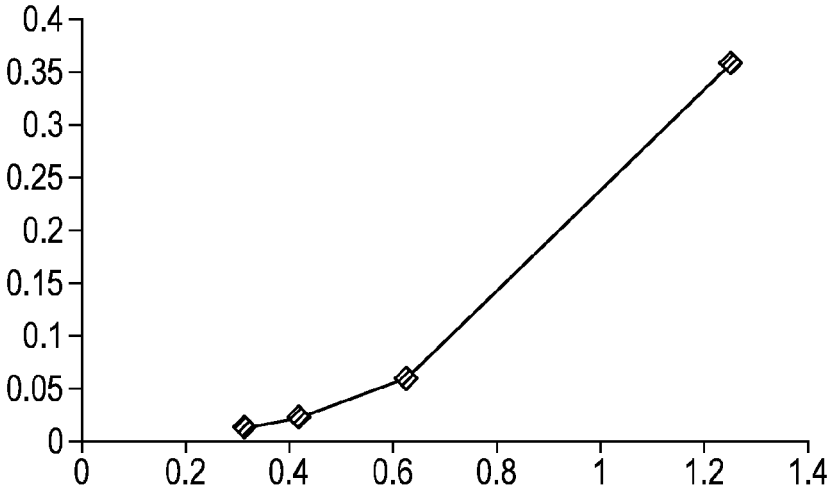
0.4
0.35
0.3
0.25
0.2
0.15
0.1
0.05
0
0
0.2
0.4
0.6
0.8
1
1.2
1.4

Fig. 8

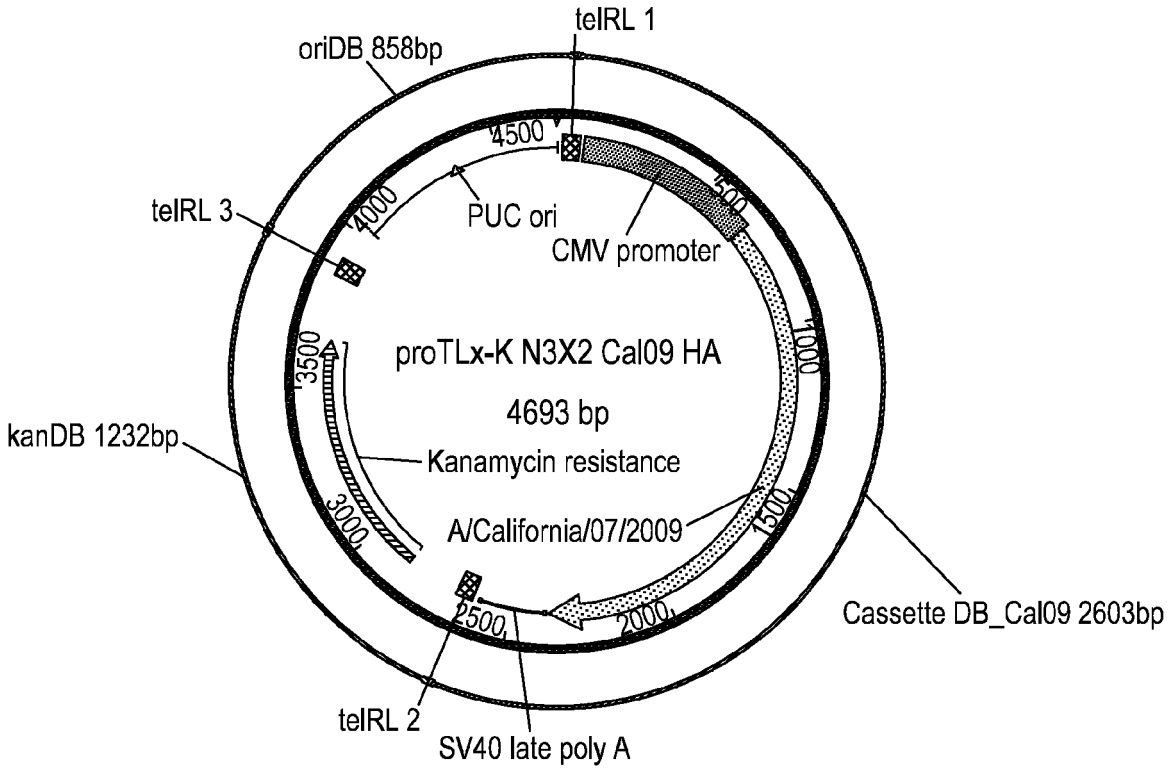
teIRL 1
oriDB 858bp
4500
500
4000
PUC ori
CMV promoter
teIRL 3
1000
3500
proTLx-K N3X2 Cal09 HA
4693 bp
kanDB 1232bp
Kanamycin resistance
3000
A/California/07/2009
1500
2500
2000
Cassette DB_Cal09 2603bp
teIRL 2
SV40 late poly A

Fig. 9

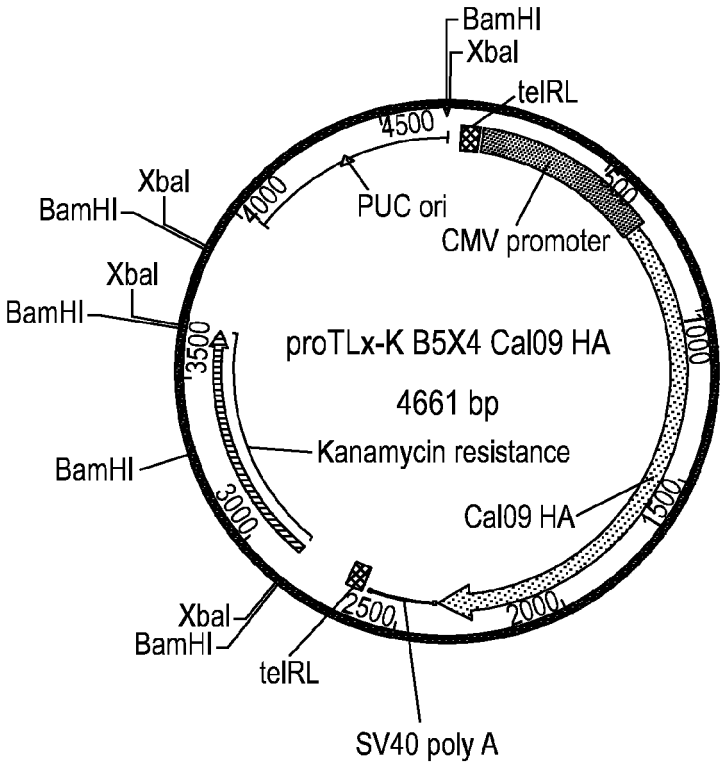
BamHI
XbaI
telRL
4500
500
1000
1500
2000
2500
3000
3500
4000
PUC ori
CMV promoter
XbaI
BamHI
XbaI
BamHI
proTLx-K B5X4 Cal09 HA
4661 bp
Kanamycin resistance
BamHI
Cal09 HA
XbaI
BamHI
telRL
SV40 poly A

Fig. 10

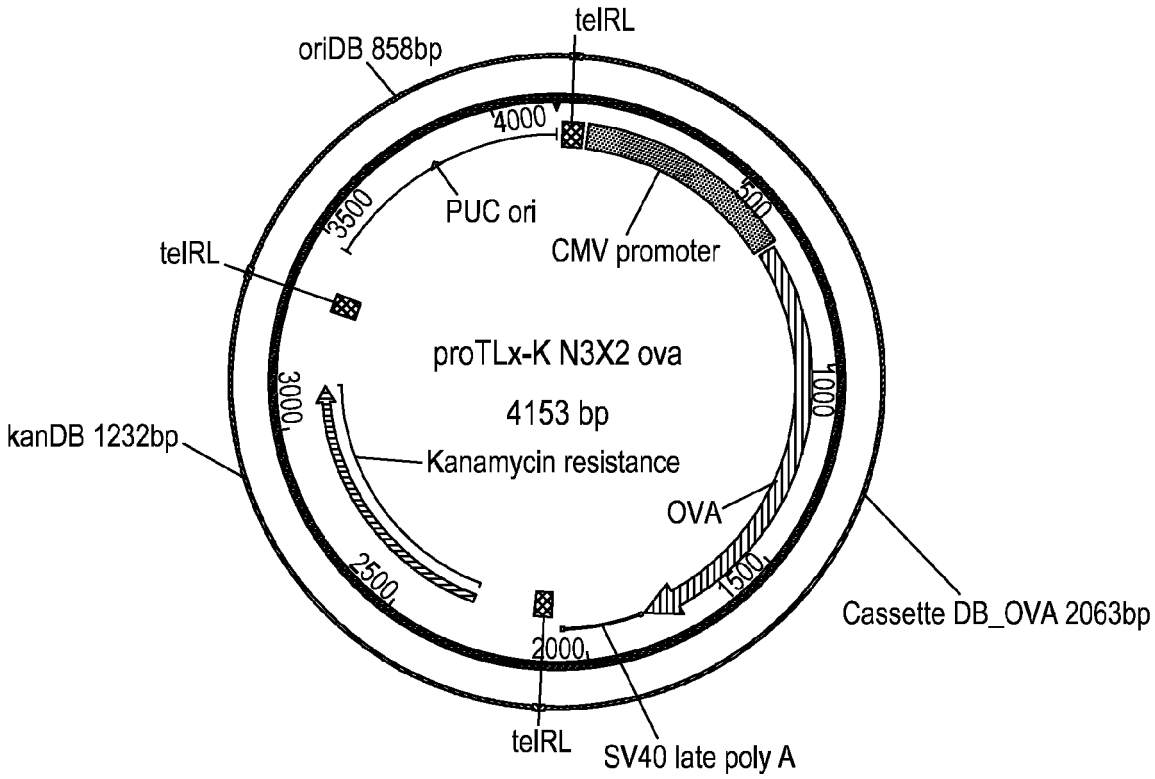
telRL
oriDB 858bp
4000
3500
PUC ori
CMV promoter
500
telRL
proTLx-K N3X2 ova
4153 bp
3000
1000
kanDB 1232bp
Kanamycin resistance
OVA
2500
1500
Cassette DB_OVA 2063bp
2000
telRL
SV40 late poly A

Fig. 11

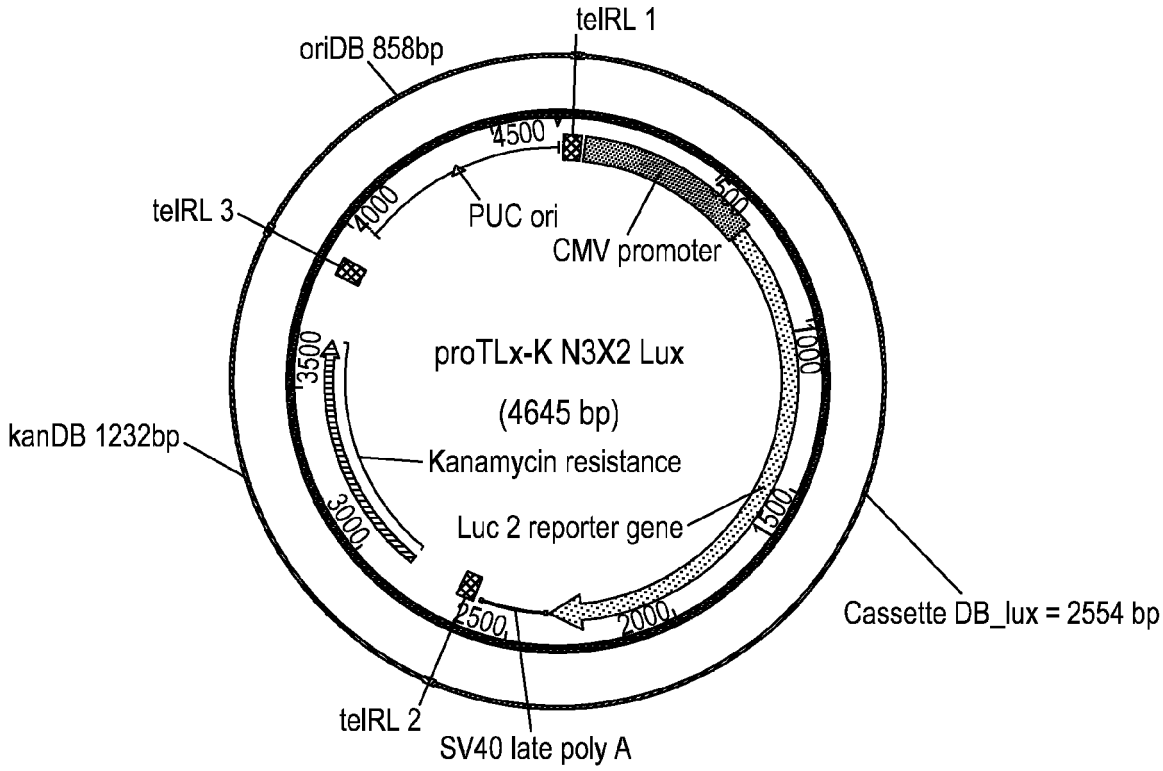
teIRL 1
oriDB 858bp
4500
500
1000
1500
2000
2500
3000
3500
4000
teIRL 3
PUC ori
CMV promoter
proTLx-K N3X2 Lux
(4645 bp)
Kanamycin resistance
Luc 2 reporter gene
kanDB 1232bp
Cassette DB_lux = 2554 bp
teIRL 2
SV40 late poly A

Fig. 12

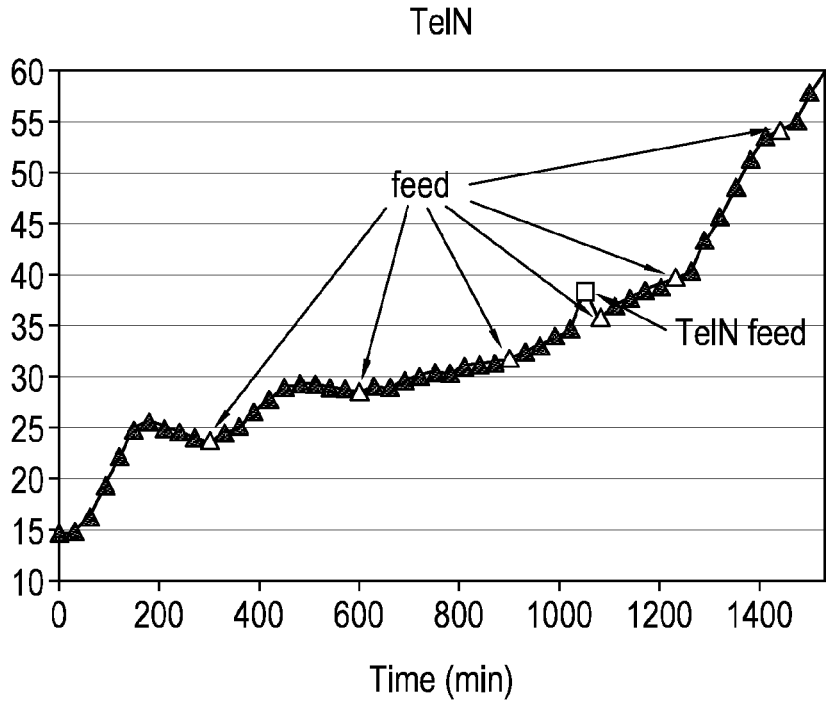
TelN
60
55
50
45
40
35
30
25
20
15
10
0
200
400
600
800
1000
1200
1400
Time (min)
feed
TelN feed

Fig. 13