Figure 1

OTS Impulse Sealer



Figure 2

Honey Straw Sealing Machine

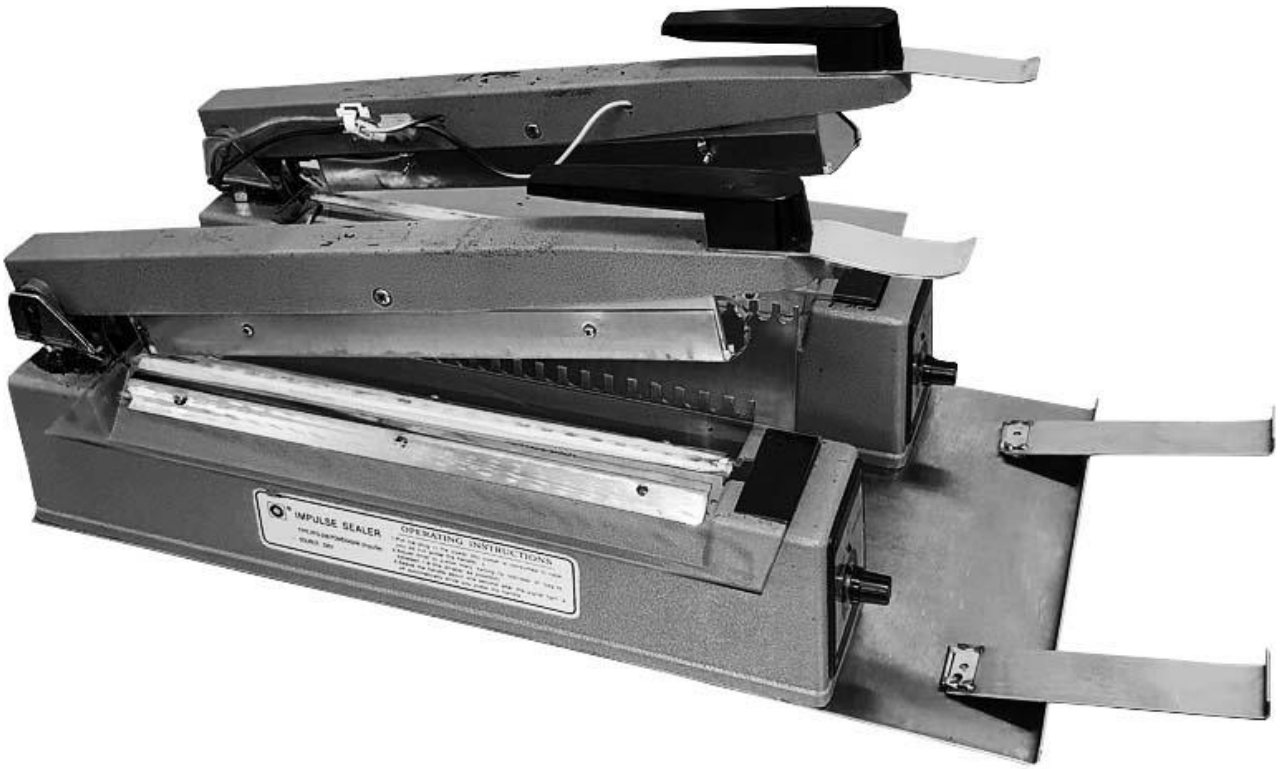

Figure 3

Sealing The Straws Filled With Honey and Held in place for cutting

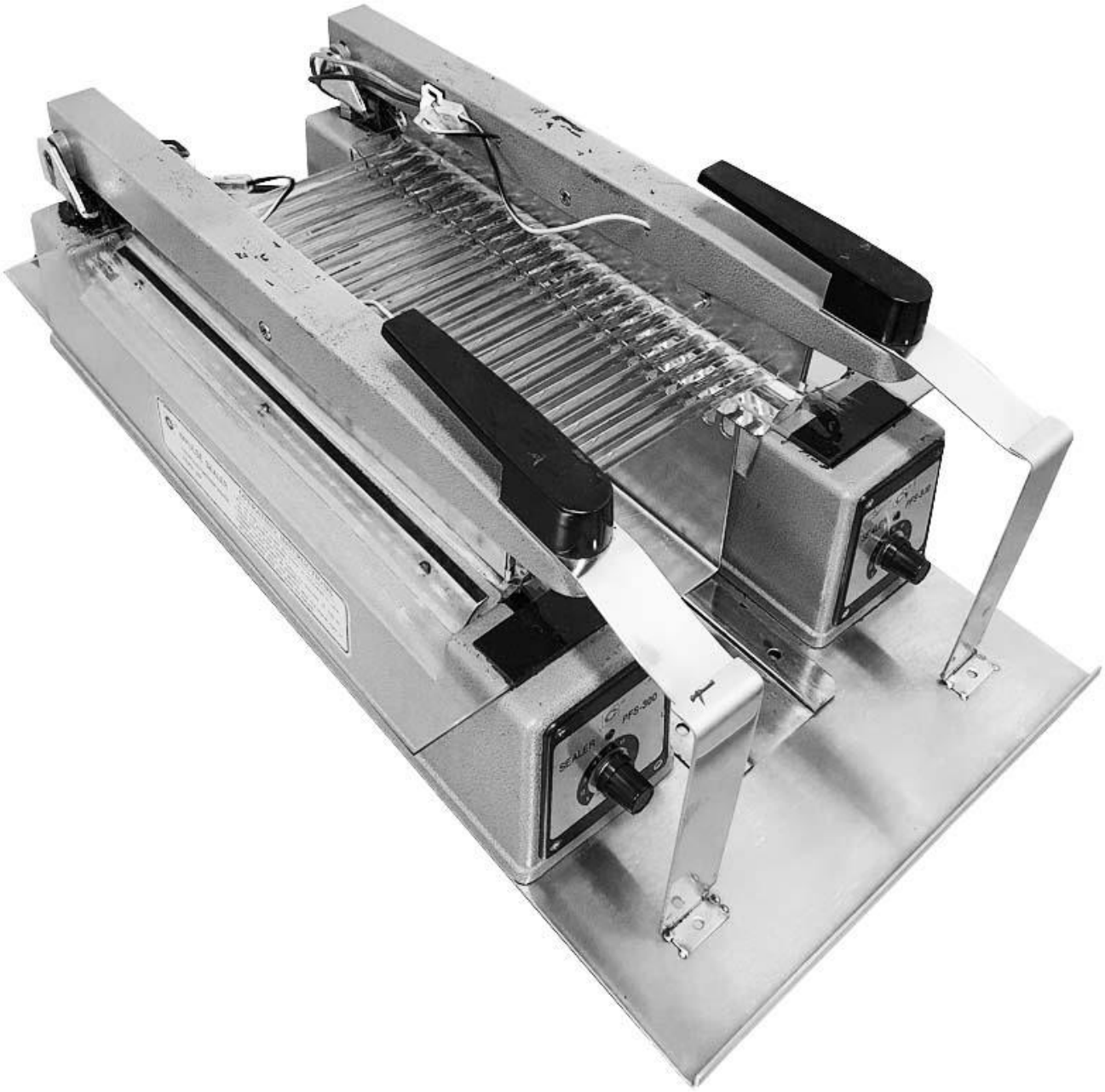

Figure 4

Honey Straws Released from Machine



Figure 5

Schematic Breakdown of the Honey Straw Sealing Machine

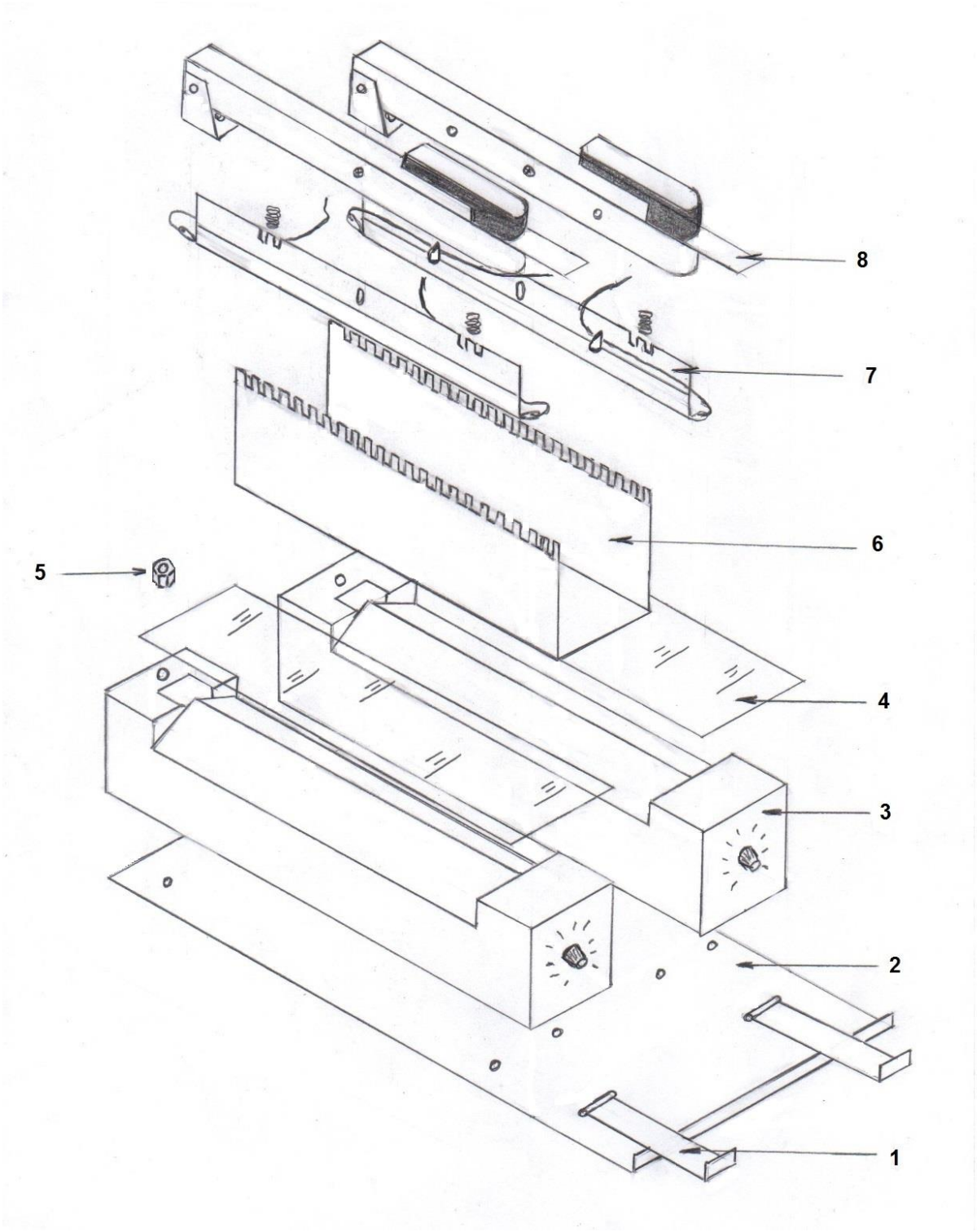

1. Stainless Steel Clip Arm
2. Stainless Steel Base Plate
3. Impulse Sealer
4. Glass Plate
5. Spacer Nut
6. Stainless Steel Straw spacer
7. Sealer Blade
8. Stainless Steel Sealer Arm Extender