Fig. 1

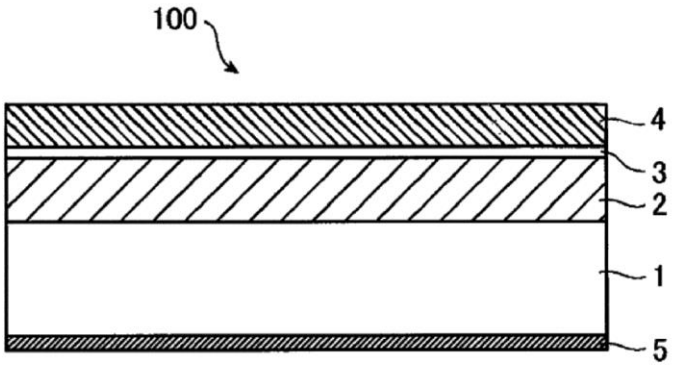

Fig. 2(a)

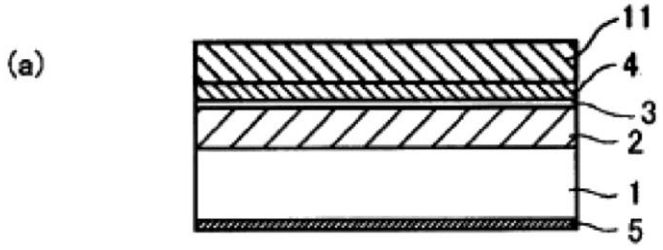

Fig. 2(b)

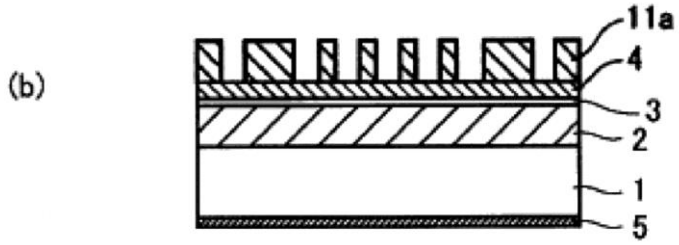

Fig. 2(c)

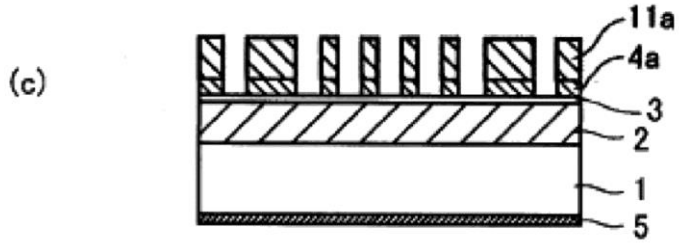

Fig. 2(d)

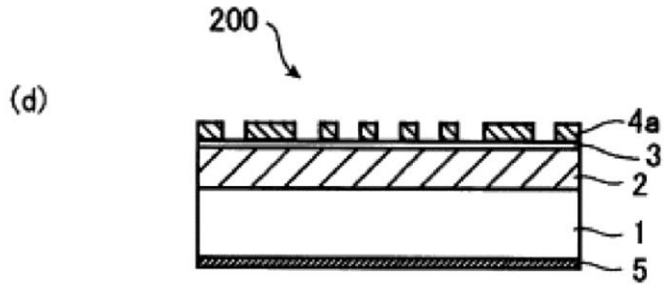

Fig. 3

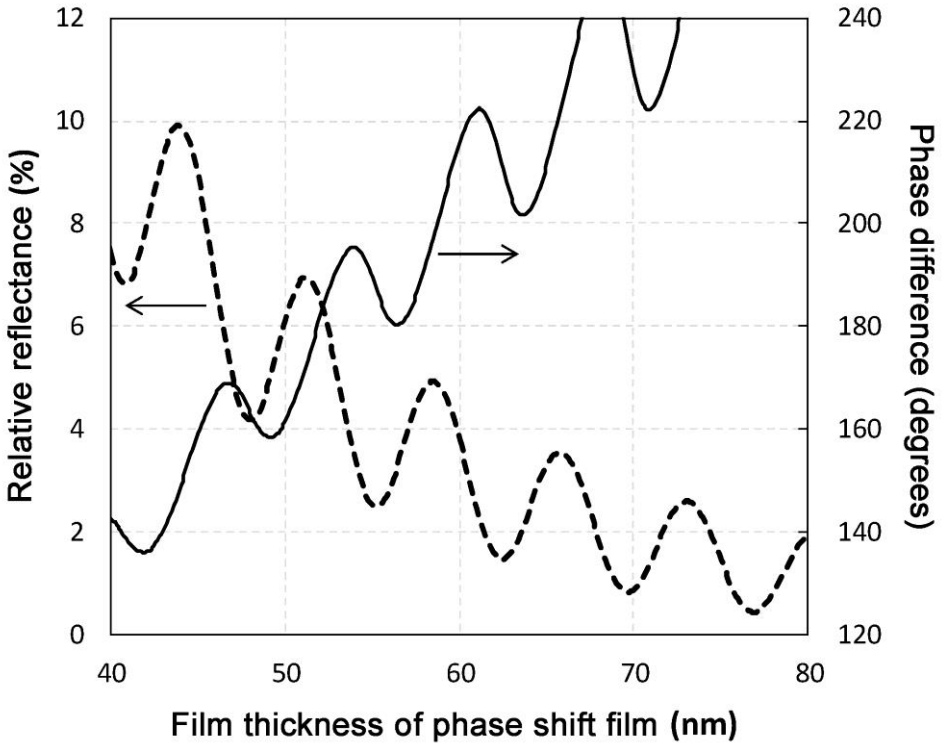
Relative reflectance (%)
Phase difference (degrees)
Film thickness of phase shift film (nm)
0
2
4
6
8
10
12
120
140
160
180
200
220
240
40
50
60
70
80

Fig. 4

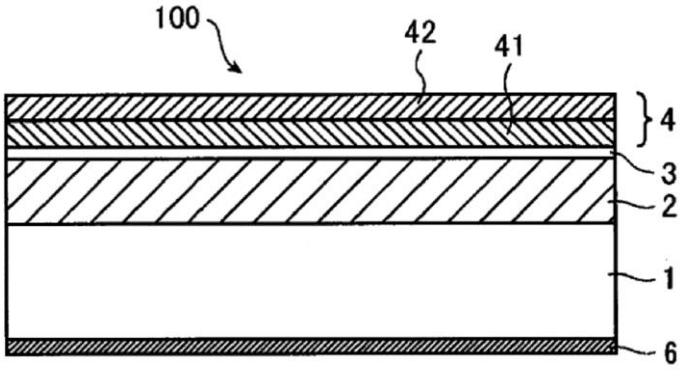
100
42
41
4
3
2
1
6

Fig. 5(a)

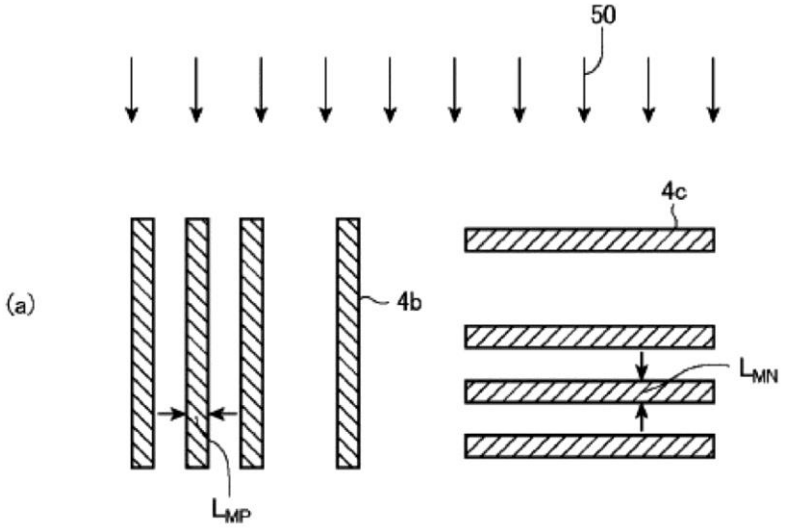

Fig. 5(b)

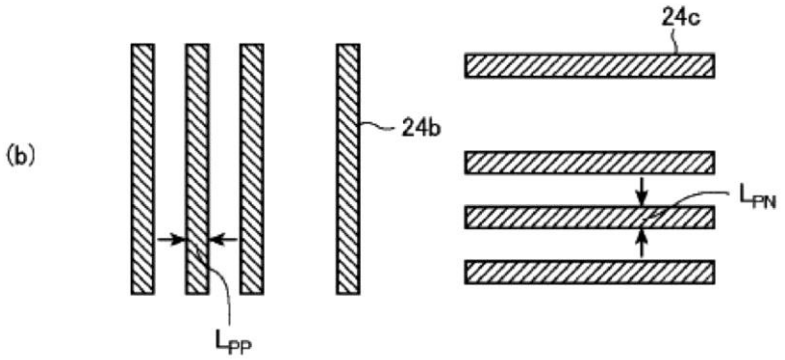

Fig. 6

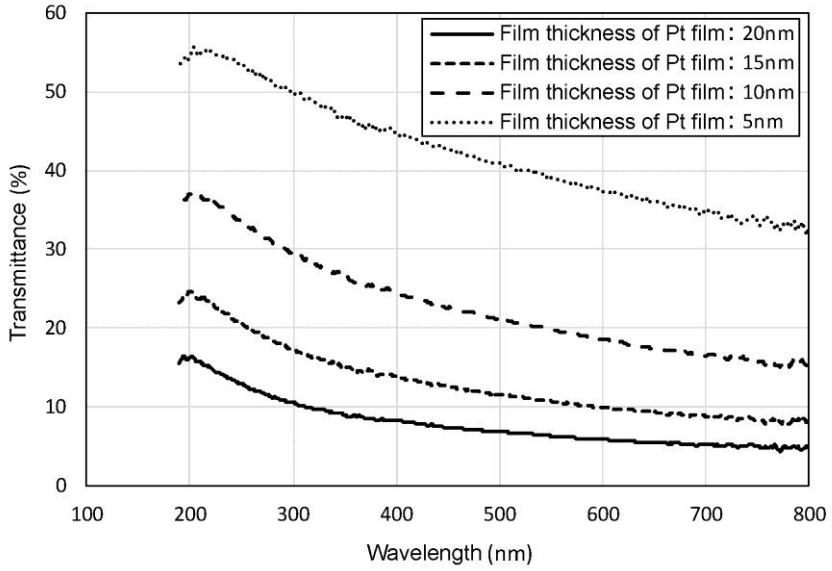
Film thickness of Pt film: 20nm
Film thickness of Pt film: 15nm
Film thickness of Pt film: 10nm
Film thickness of Pt film: 5nm
Transmittance (%)
Wavelength (nm)
0
10
20
30
40
50
60
100
200
300
400
500
600
700
800

Fig. 7

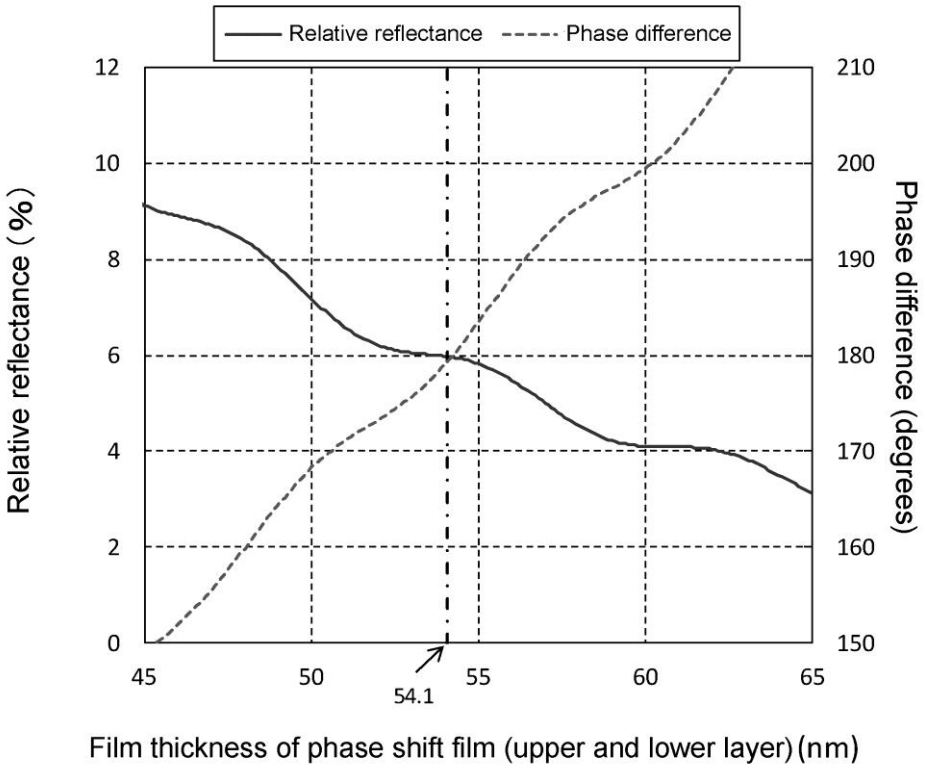
Relative reflectance
Phase difference
Relative reflectance (%)
Phase difference (degrees)
Film thickness of phase shift film (upper and lower layer) (nm)
54.1
0
2
4
6
8
10
12
150
160
170
180
190
200
210
45
50
55
60
65