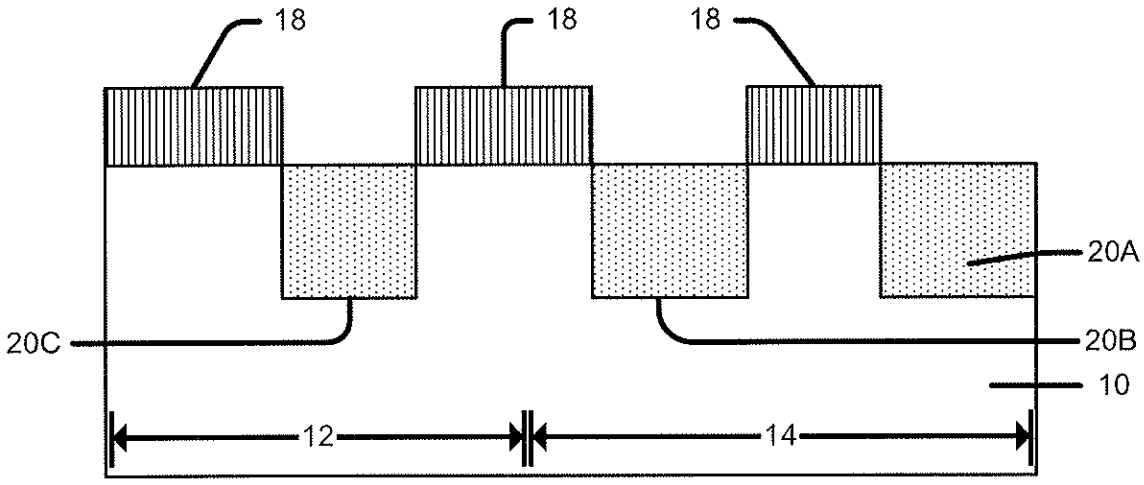


FIGURE 1

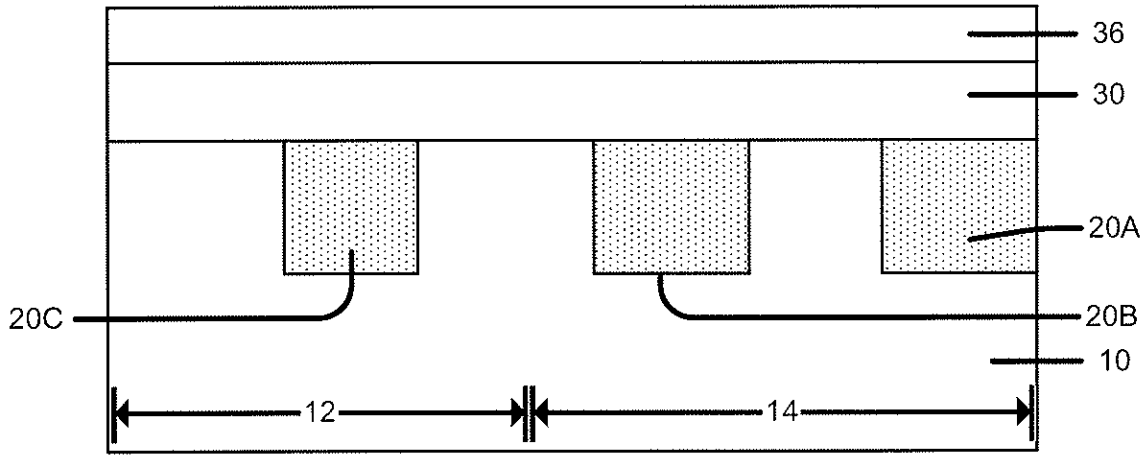


FIGURE 2

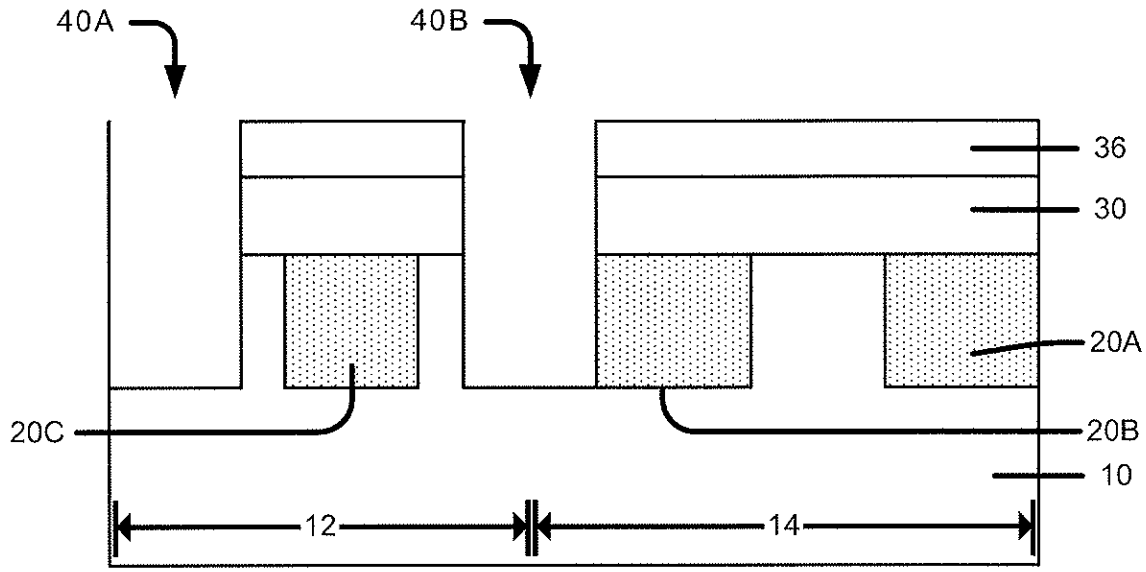


FIGURE 3

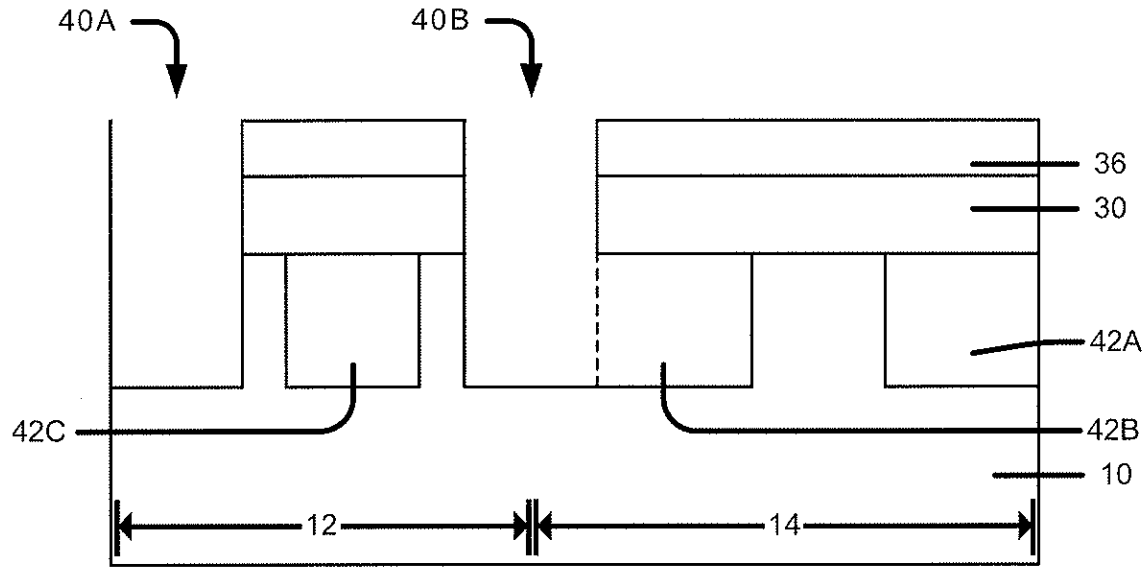


FIGURE 4

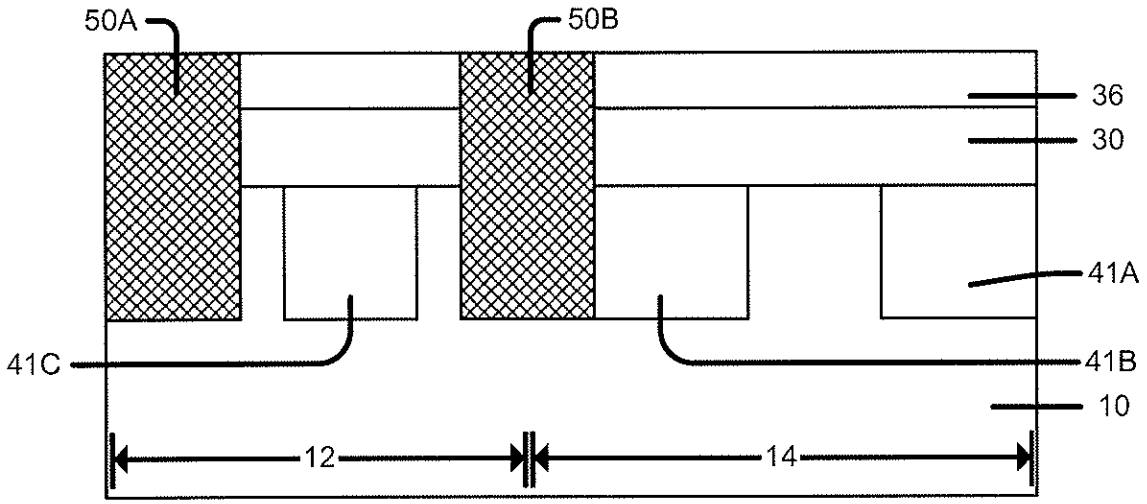


FIGURE 5A

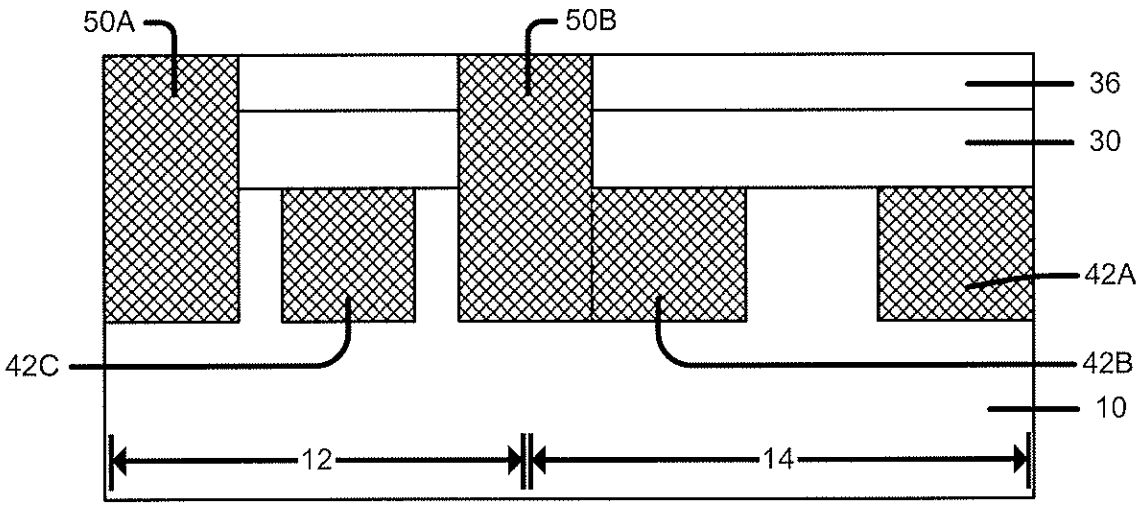


FIGURE 5B

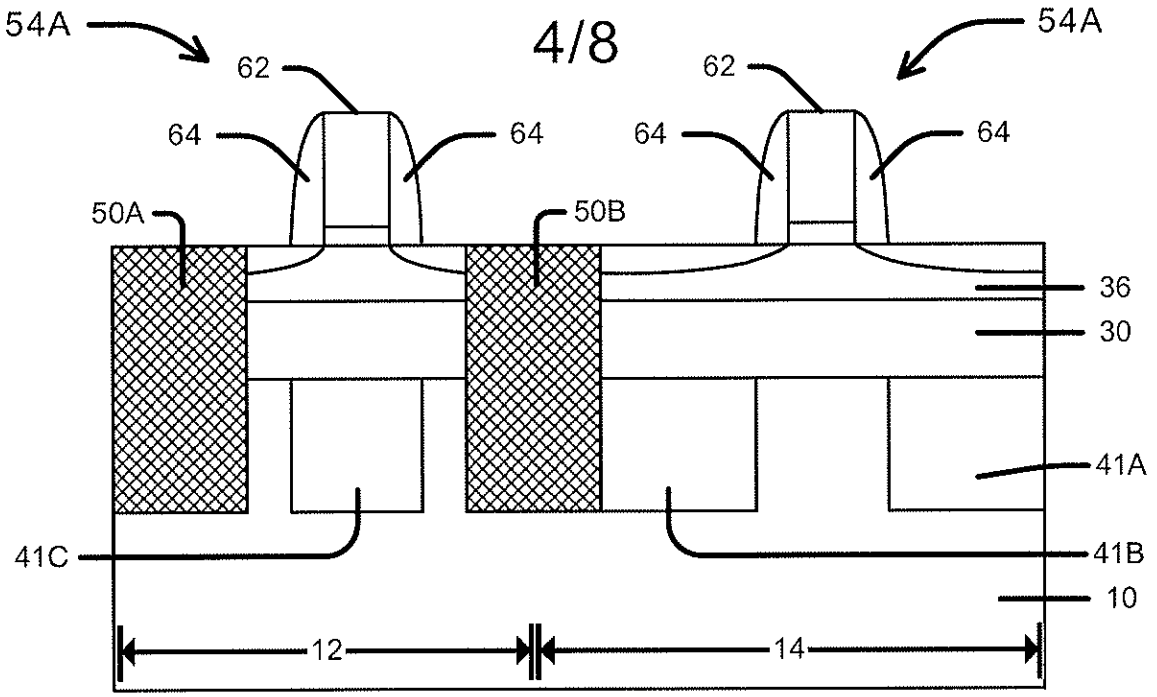


FIGURE 6A

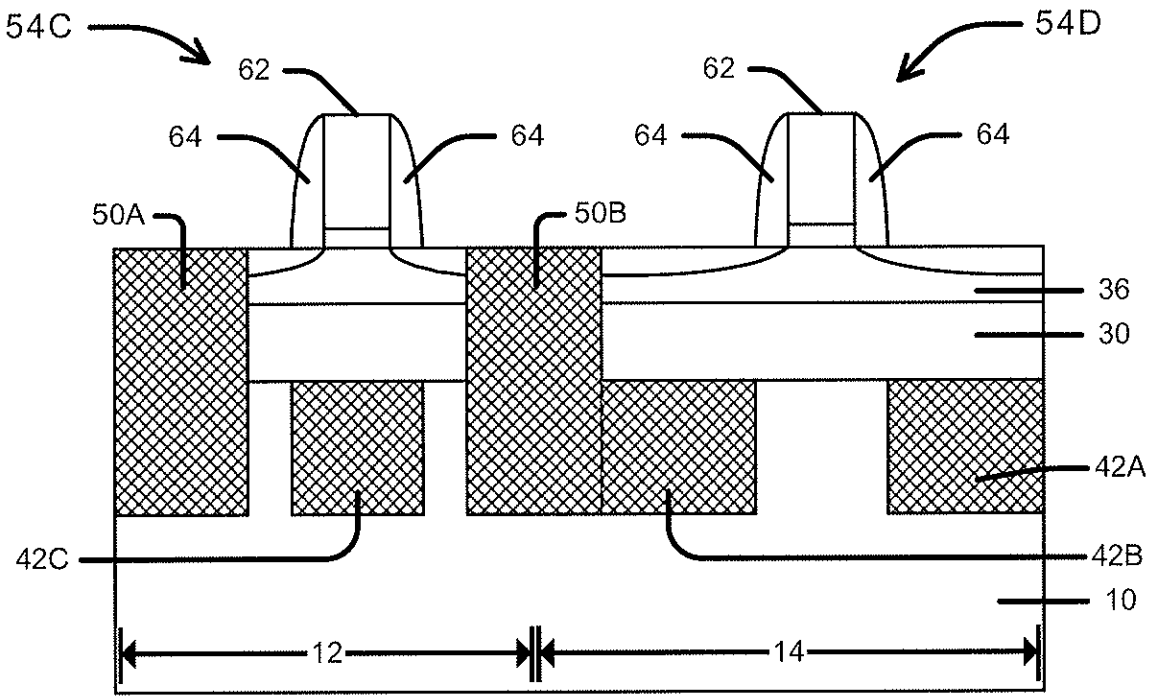


FIGURE 6B

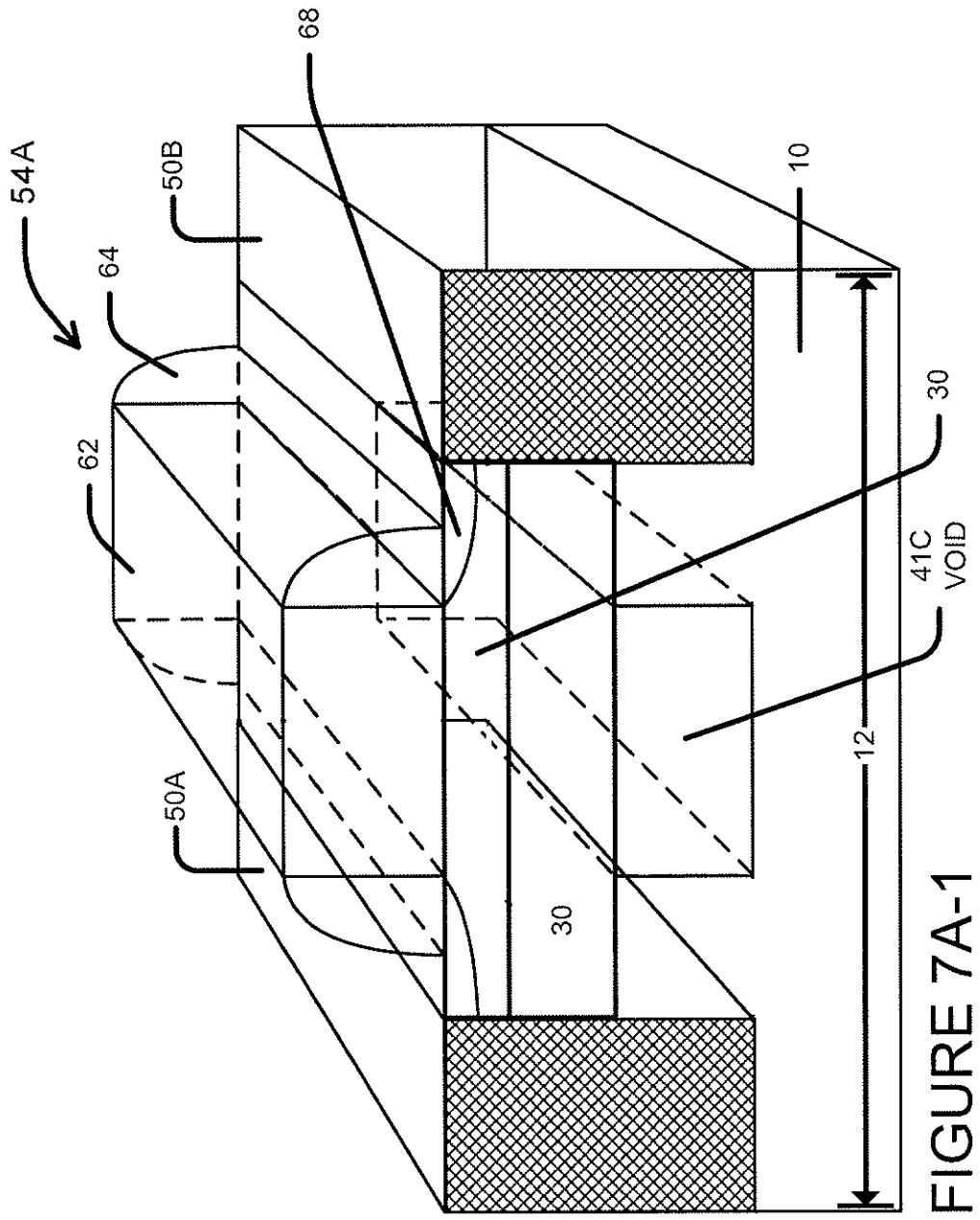


FIGURE 7A-1

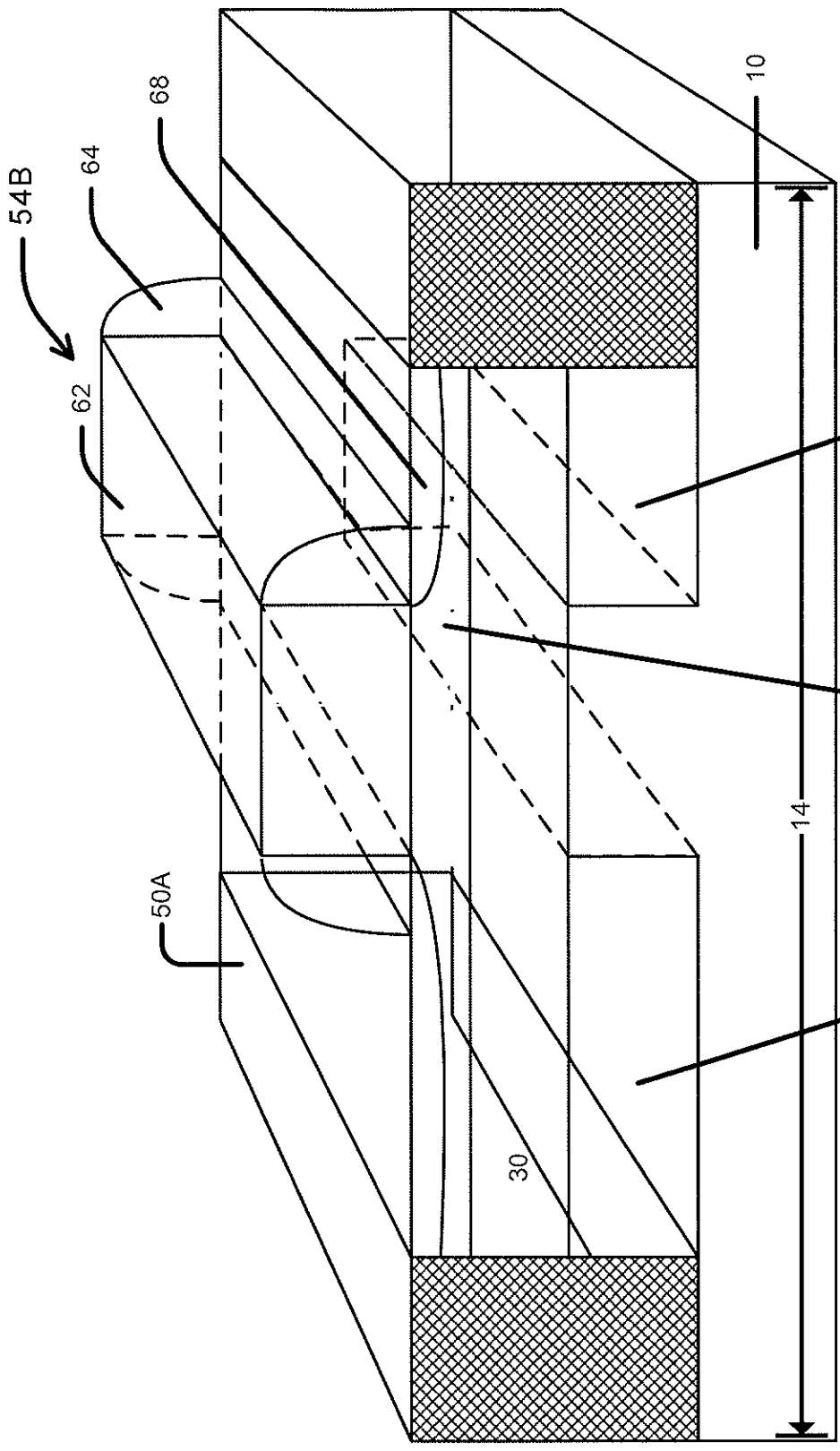


FIGURE 7A-2

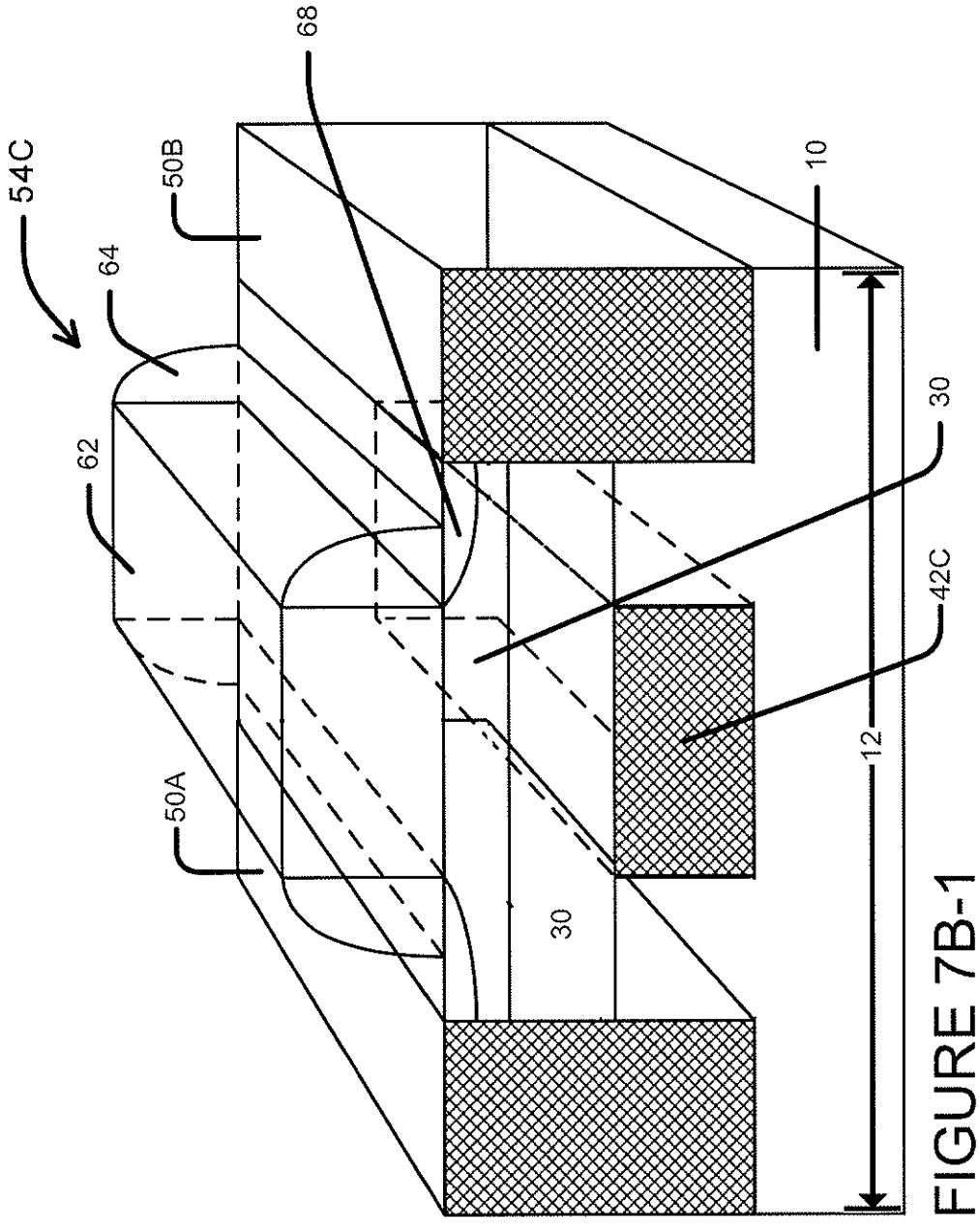


FIGURE 7B-1

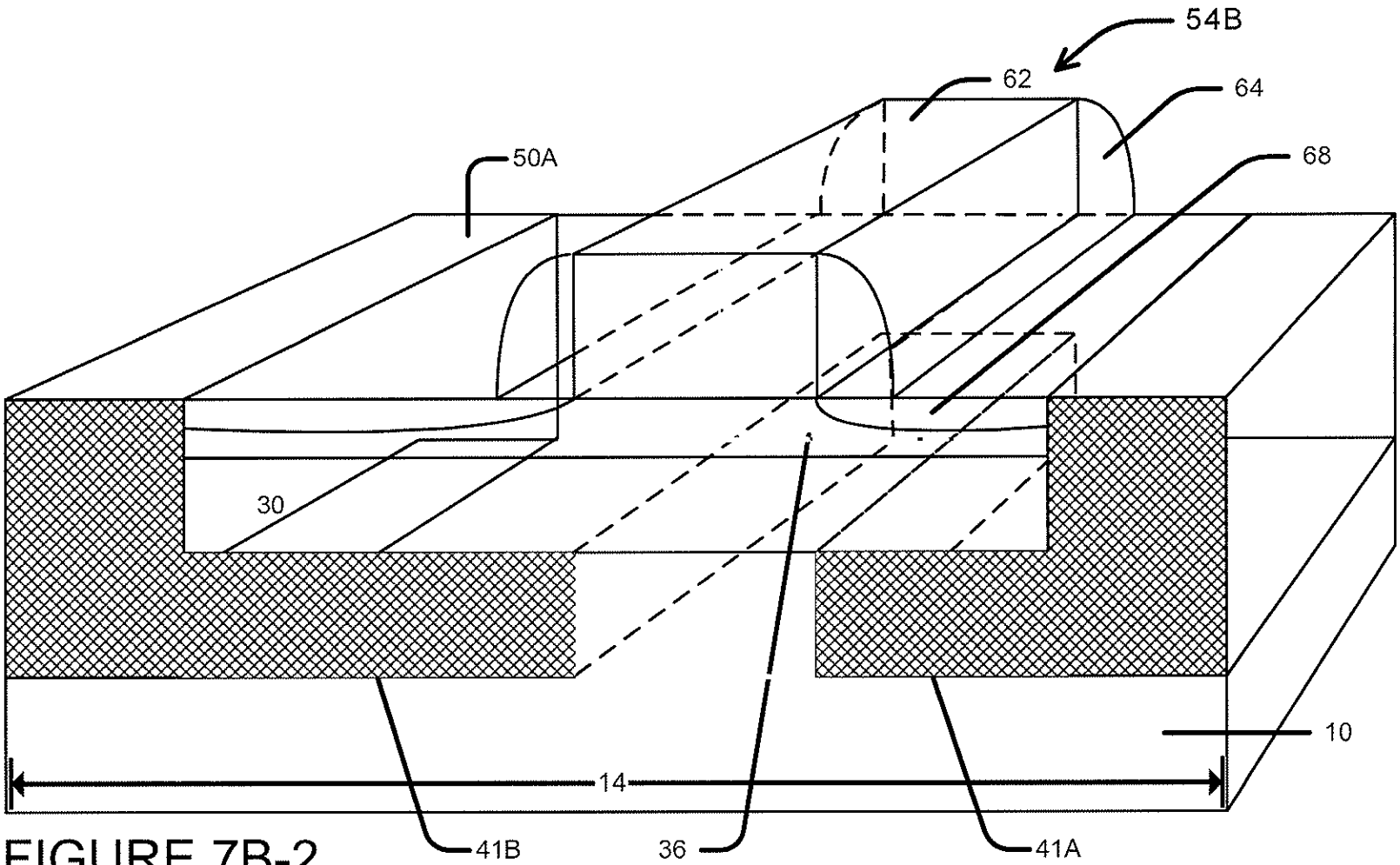


FIGURE 7B-2