(12) INTERNATIONAL APPLICATION PUBLISHED UNDER THE PATENT COOPERATION TREATY (PCT)

(19) World Intellectual Property Organization
International Bureau

(43) International Publication Date
19 August 2004 (19.08.2004)

PCT

(10) International Publication Number
WO 2004/069412 A1

(51) International Patent Classification[7]: B01L 3/00, C12Q 1/68

(21) International Application Number: PCT/US2004/002435

(22) International Filing Date: 28 January 2004 (28.01.2004)

(25) Filing Language: English

(26) Publication Language: English

(30) Priority Data:
10/355,397 31 January 2003 (31.01.2003) US

(71) Applicant *(for all designated States except US)*: **HEWLETT-PACKARD DEVELOPMENT COMPANY, L.P.** [US/US]; 20555 S.H. 249, Houston, TX 77070 (US).

(72) Inventors; and

(75) Inventors/Applicants *(for US only)*: **PEASE, Grant** [US/US]; 7425 Hoodview Circle, Corvallis, OR 97330 (US). **GHOZEIL, Adam, L.** [US/US]; 3730 NW Roosevelt Dr., Corvallis, OR 97330 (US). **DUNFIELD, John, Stephen** [US/US]; 1325 NW Heather Dr., Corvallis, OR 97330 (US). **CHILDERS, Winthrop, D.** [US/US]; 9855 Fox Valley Way, San Diego, CA 92127 (US). **TYVOLL, David** [US/US]; 6451 Dowling Drive, La Jolla, CA 92037 (US). **SEXTON, Douglas, A.** [US/US]; 5612 Ladybird Lane, La Jolla, CA 92037 (US). **CRIVELLI, Paul** [US/US]; 7824 Mission Bonita Drive, San Diego, CA 92120 (US).

(74) Agents: **HAYMOND, W., Bradley** et al.; Hewlett-Packard Company, Intellectual Property Administration, P.O. Box 272400, Mail Stop 35, Fort Collins, CO 80527-2400 (US).

(81) Designated States *(unless otherwise indicated, for every kind of national protection available)*: AE, AG, AL, AM, AT, AU, AZ, BA, BB, BG, BR, BW, BY, BZ, CA, CH, CN, CO, CR, CU, CZ, DE, DK, DM, DZ, EC, EE, EG, ES, FI, GB, GD, GE, GH, GM, HR, HU, ID, IL, IN, IS, JP, KE, KG, KP, KR, KZ, LC, LK, LR, LS, LT, LU, LV, MA, MD, MG, MK, MN, MW, MX, MZ, NA, NI, NO, NZ, OM, PG, PH, PL, PT, RO, RU, SC, SD, SE, SG, SK, SL, SY, TJ, TM, TN, TR, TT, TZ, UA, UG, US, UZ, VC, VN, YU, ZA, ZM, ZW.

(84) Designated States *(unless otherwise indicated, for every kind of regional protection available)*: ARIPO (BW, GH, GM, KE, LS, MW, MZ, SD, SL, SZ, TZ, UG, ZM, ZW), Eurasian (AM, AZ, BY, KG, KZ, MD, RU, TJ, TM), European (AT, BE, BG, CH, CY, CZ, DE, DK, EE, ES, FI, FR, GB, GR, HU, IE, IT, LU, MC, NL, PT, RO, SE, SI, SK, TR), OAPI (BF, BJ, CF, CG, CI, CM, GA, GN, GQ, GW, ML, MR, NE, SN, TD, TG).

Published:
— *with international search report*
— *before the expiration of the time limit for amending the claims and to be republished in the event of receipt of amendments*

[Continued on next page]

(54) Title: MICROFLUIDIC DEVICE WITH THIN-FILM ELECTRONIC DEVICES

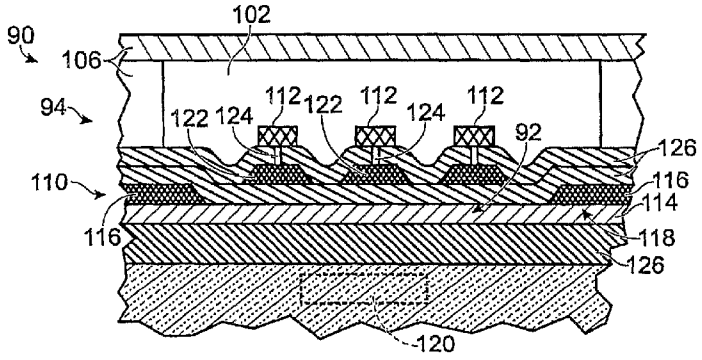

(57) Abstract: A microfluidic device (90) for analysis of a sample. The microfluidic device includes a substrate portion (94) that at least partially defines a chamber (102) for receiving the sample. The substrate portion (94) includes a substrate (98) having a surface (96). The substrate portion (94) also includes a plurality of thin-film layers (110) formed on the substrate (98) adjacent the surface (96). The thin-film layers (110) form a plurality of electronic devices. Each of at least two of the electronic devices is formed by a different set of the thin-film layers (110). The at least two electronic devices may include 1) a temperature control device for controlling the temperature of fluid in the chamber (102), and 2) an other electronic device configured to sense or modify a property of fluid in the chamber (102).

WO 2004/069412 A1

For two-letter codes and other abbreviations, refer to the "Guidance Notes on Codes and Abbreviations" appearing at the beginning of each regular issue of the PCT Gazette.