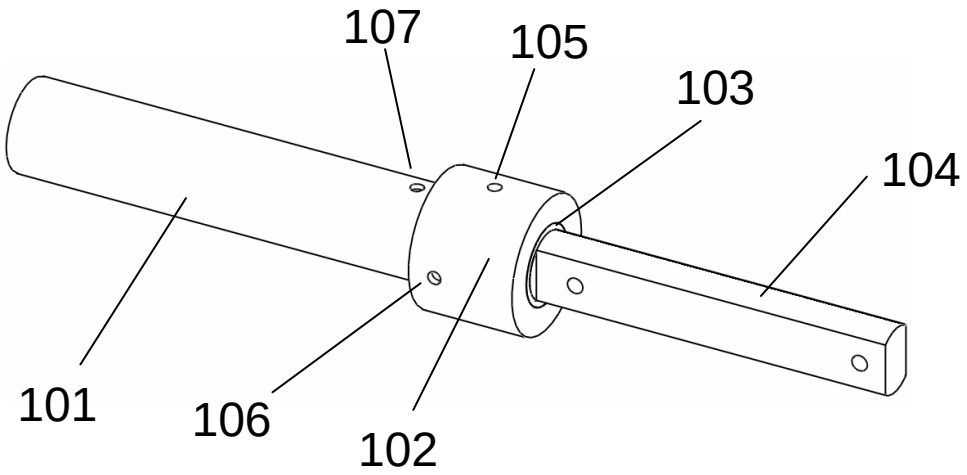

Figure 1

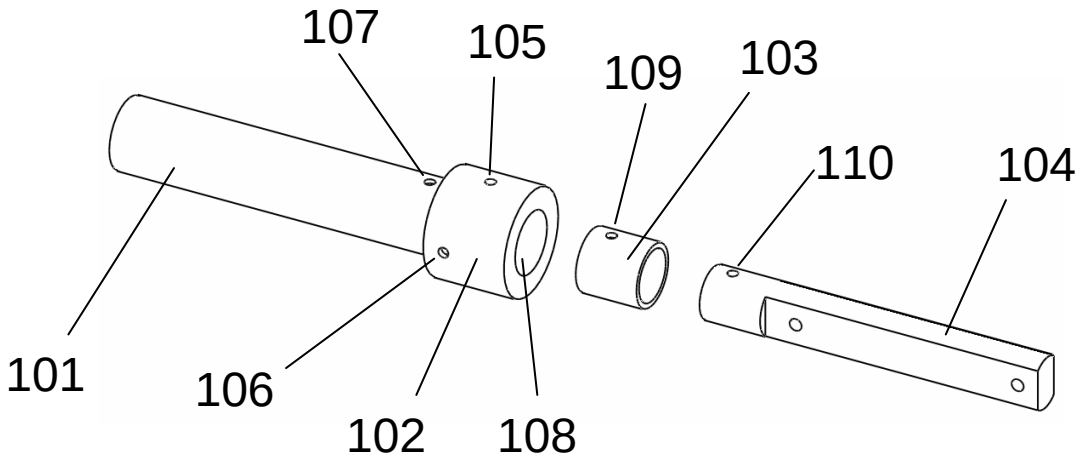

Figure 2

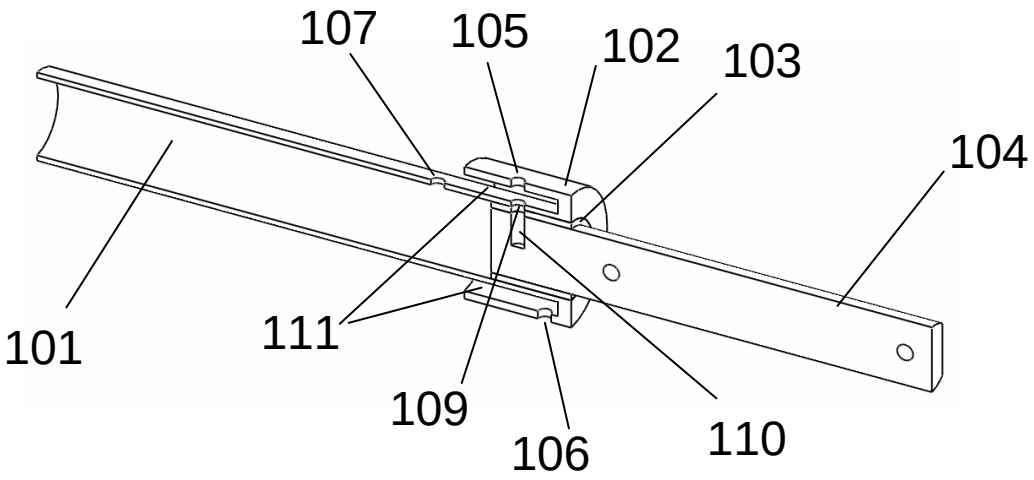

Figure 3

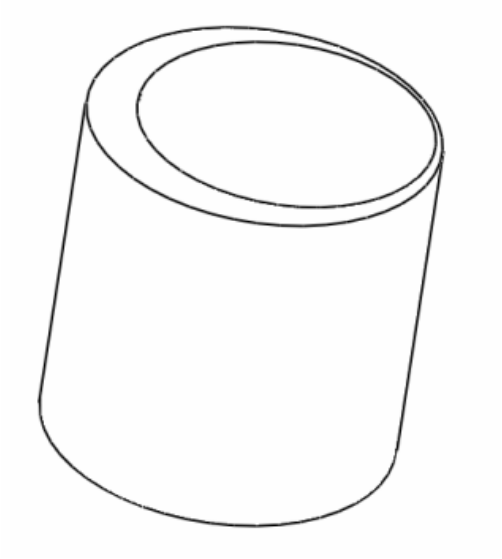

Figure 4

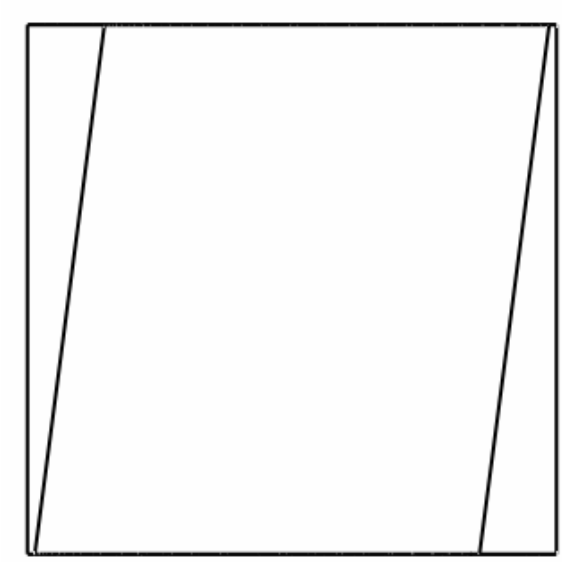

Figure 5

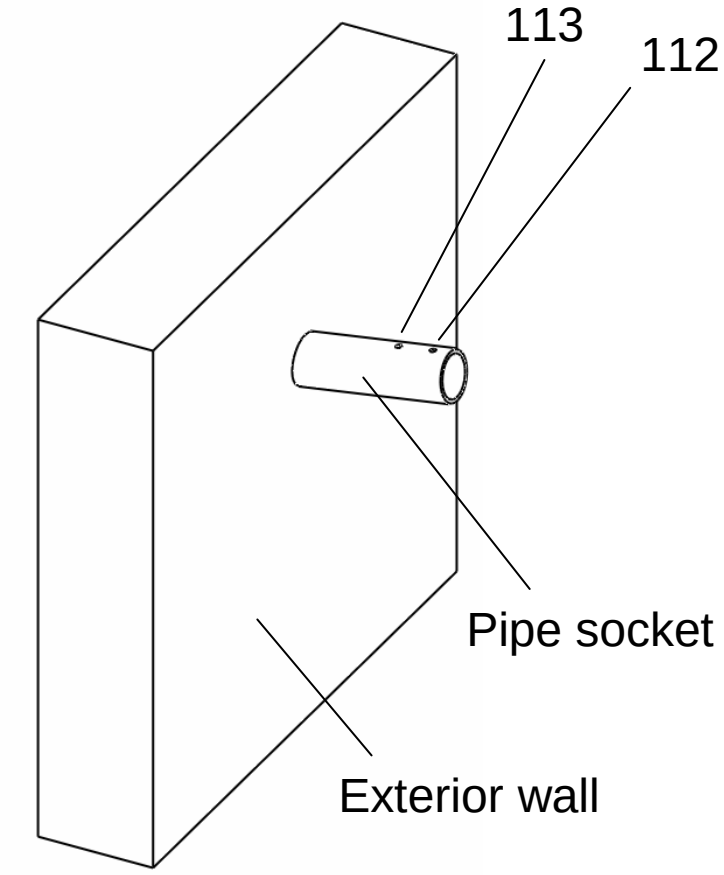

Figure 6

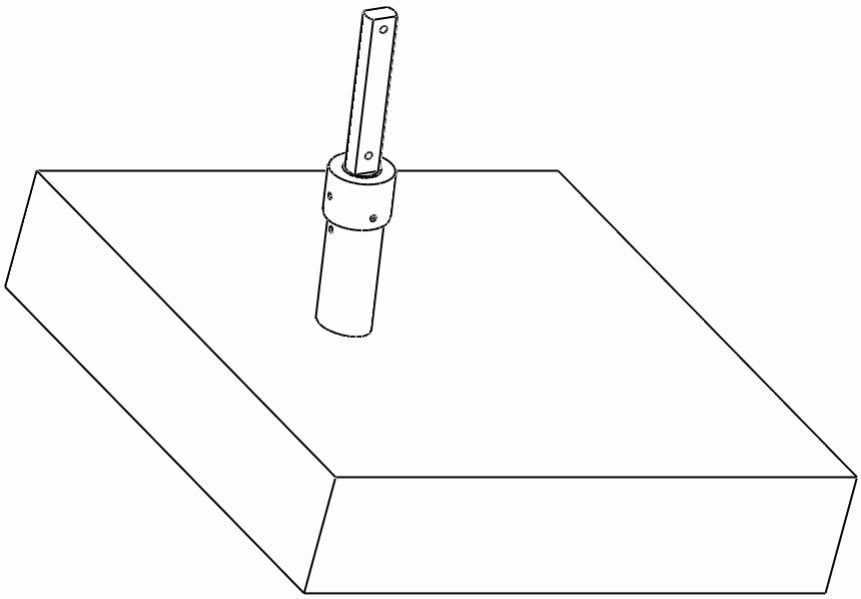

Figure 7

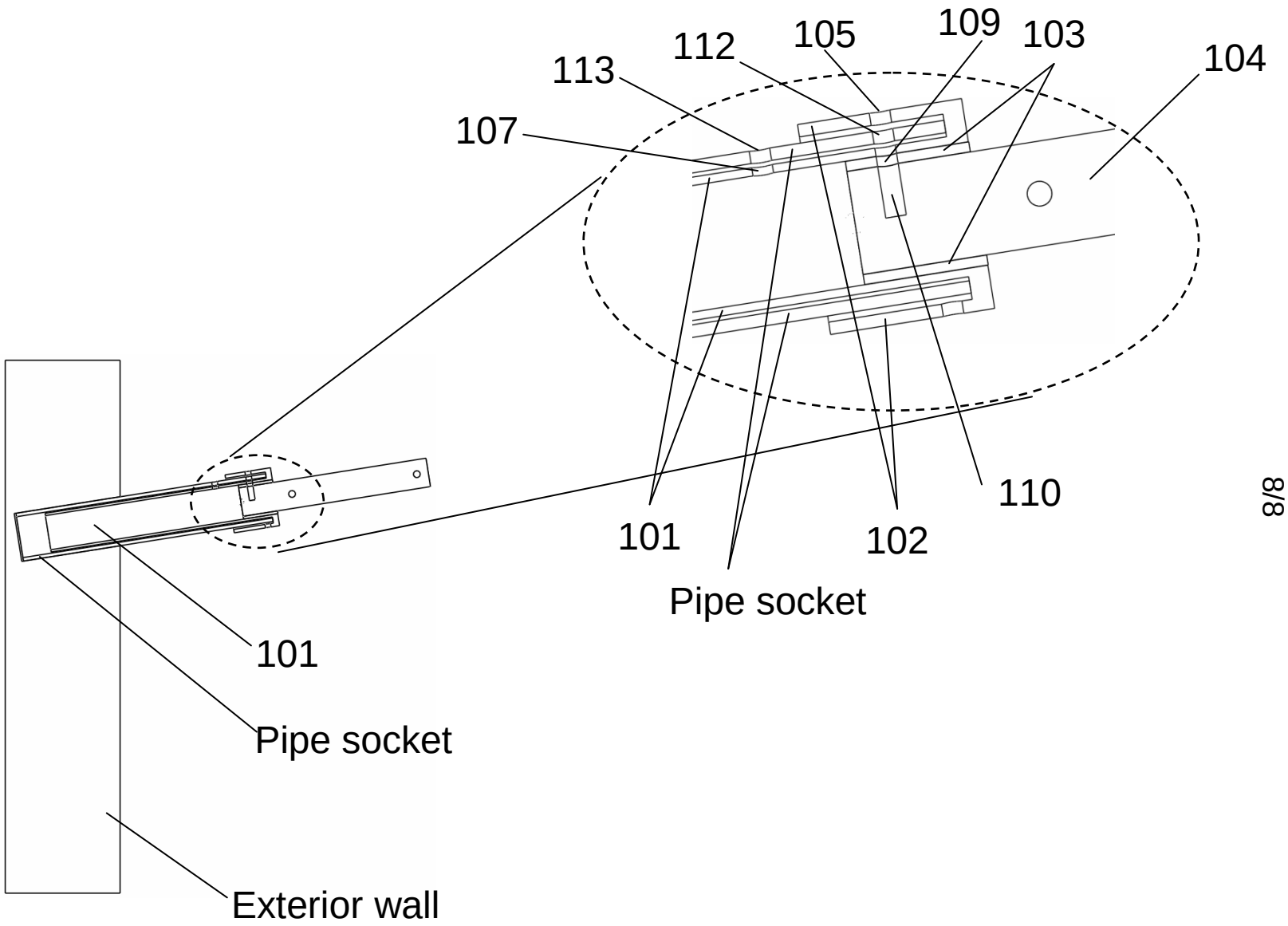
112
105
109
103
104
113
107
110
101
102
Pipe socket
101
Pipe socket
Exterior wall

Figure 8