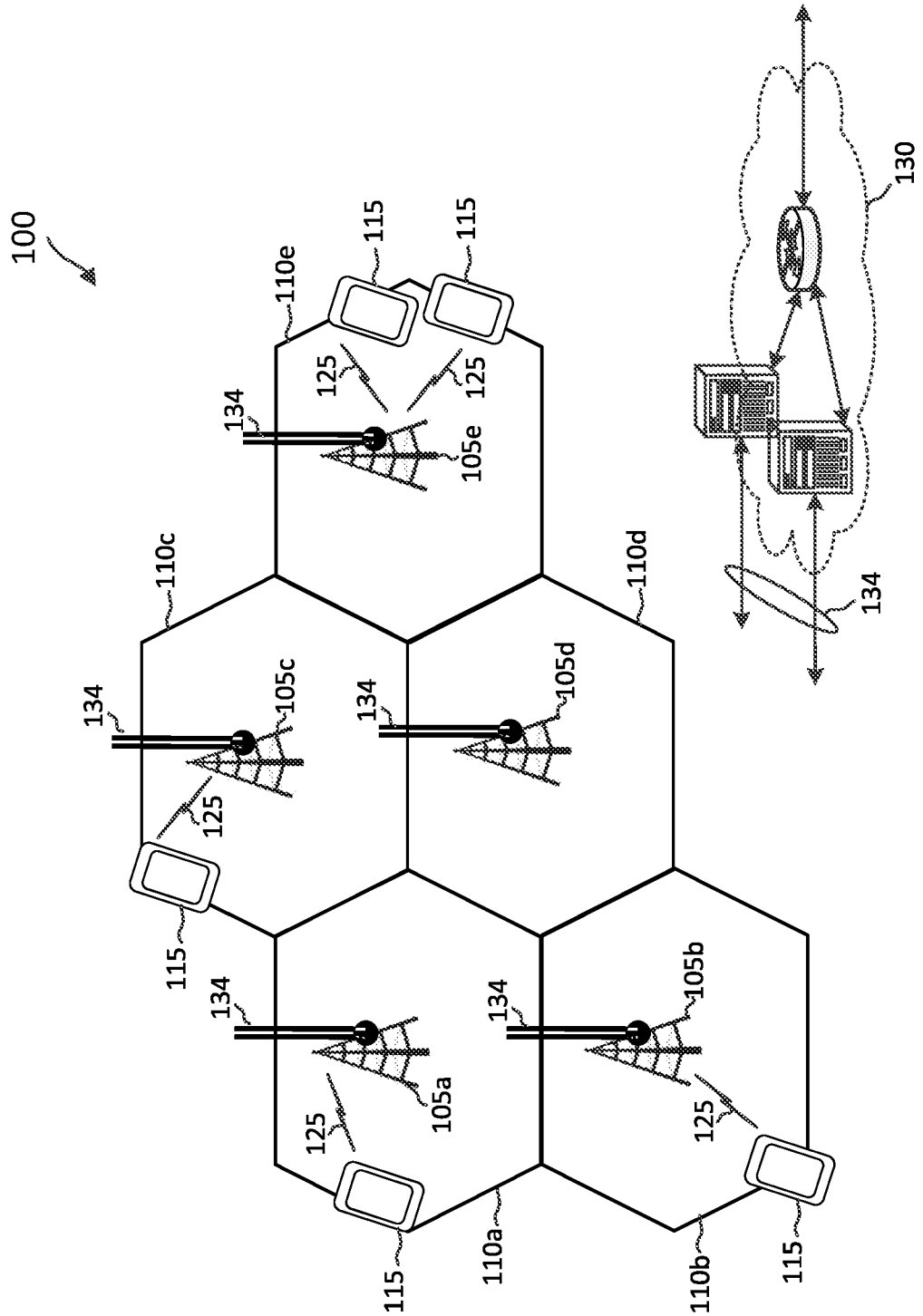
100
110a
110b
110c
110d
110e
105a
105b
105c
105d
105e
115
125
130
134

FIG. 1

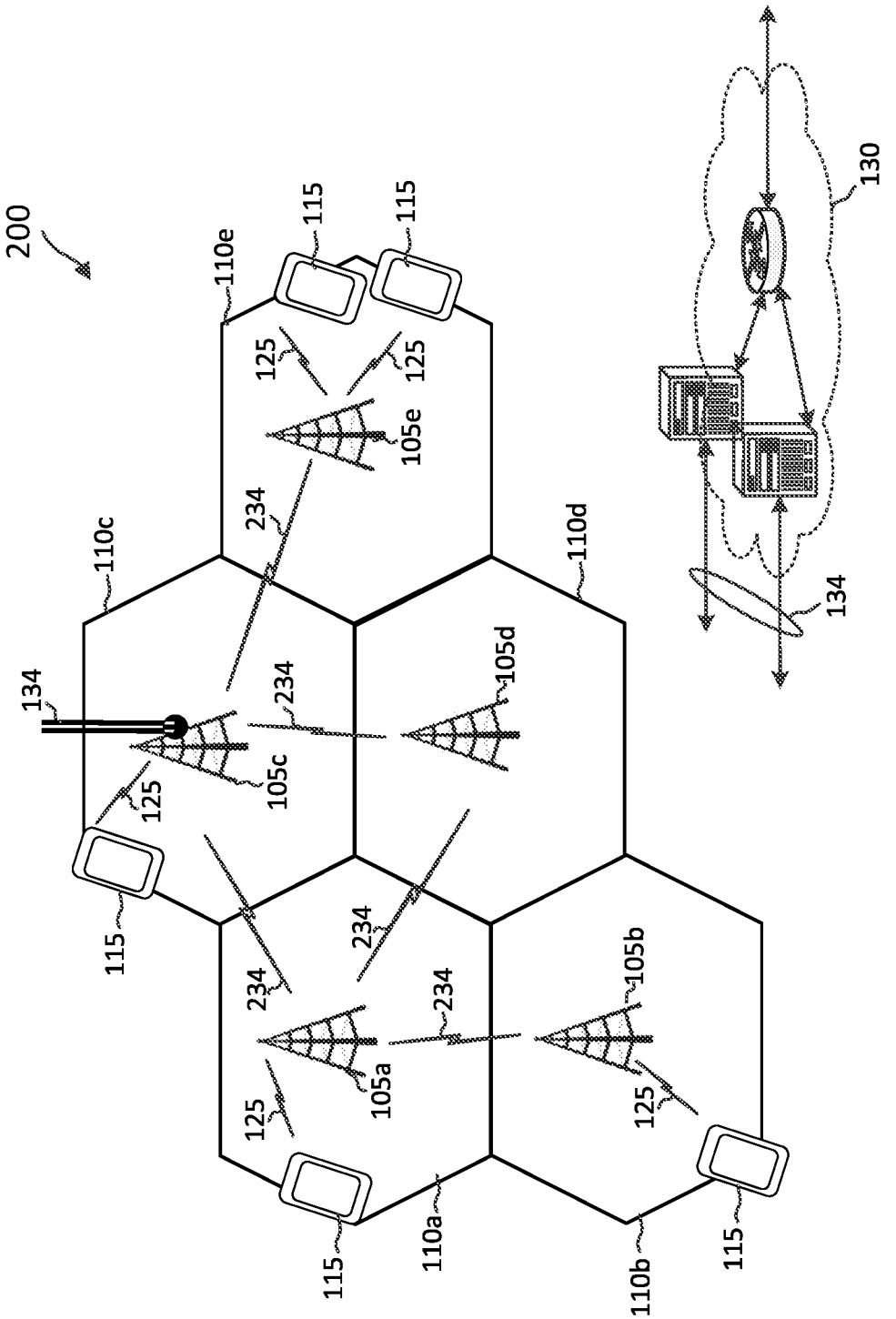
200
110e
115
115
125
125
105e
234
110c
110d
130
134
234
105d
105c
125
115
234
234
234
105b
105a
125
125
115
110a
110b
115
134

FIG. 2

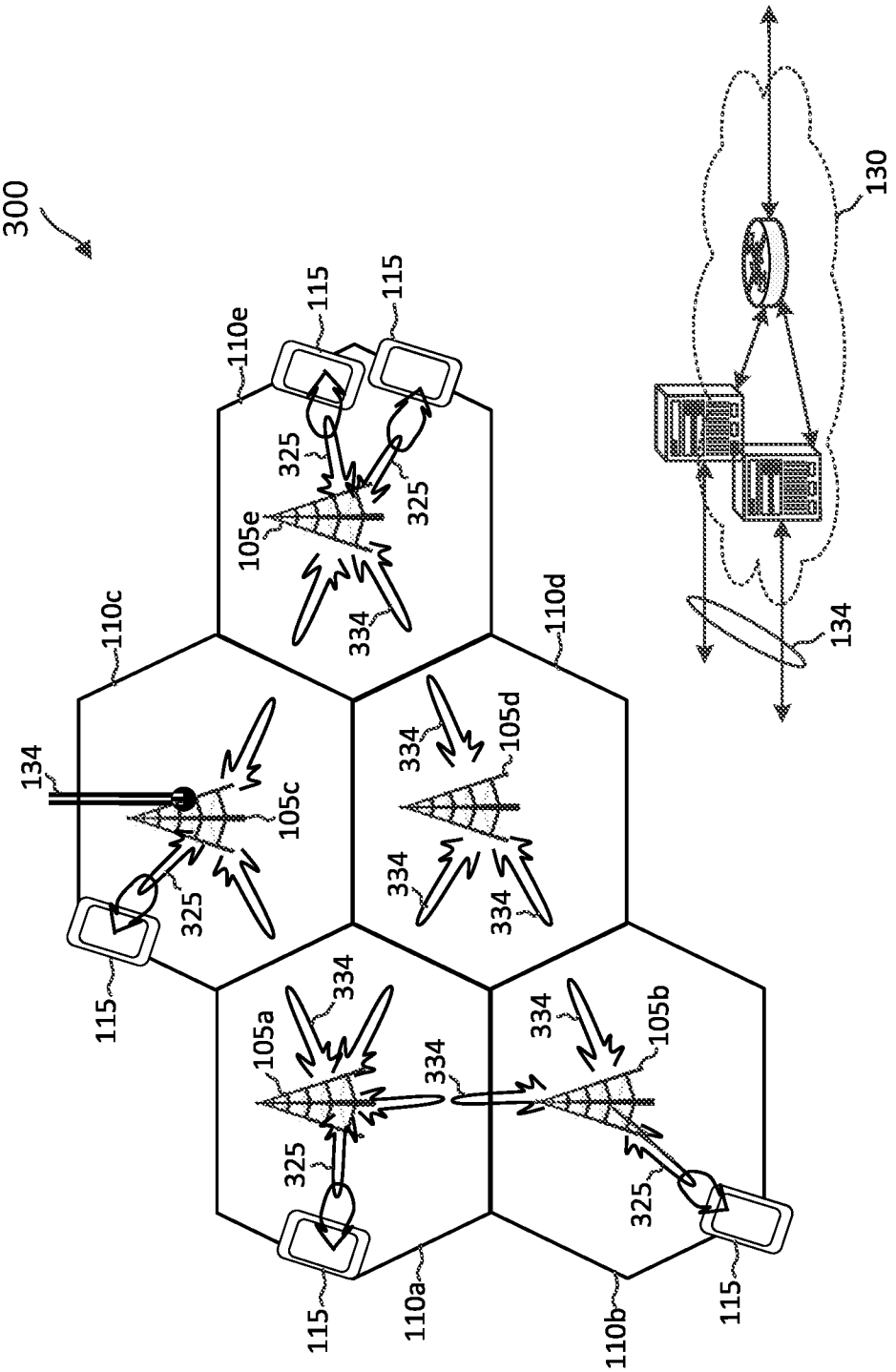
300
130
134
134
110a
110b
110c
110d
110e
115
115
115
115
105a
105b
105c
105d
105e
325
325
325
325
325
334
334
334
334
334
334
334

FIG. 3

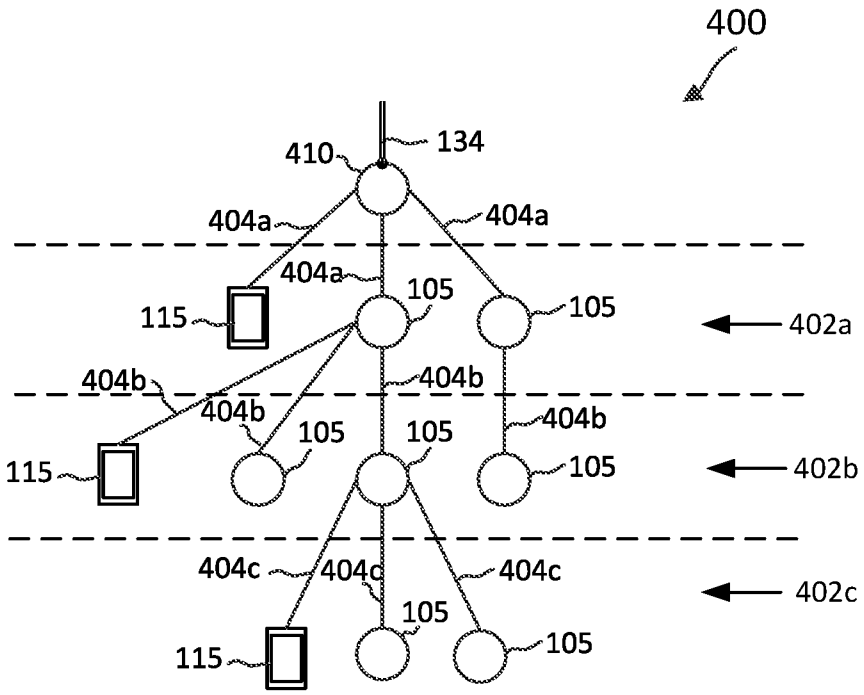
400
410
134
404a
404a
404a
105
105
115
402a
404b
404b
404b
105
105
105
115
402b
404c
404c
404c
105
105
115
402c

FIG. 4

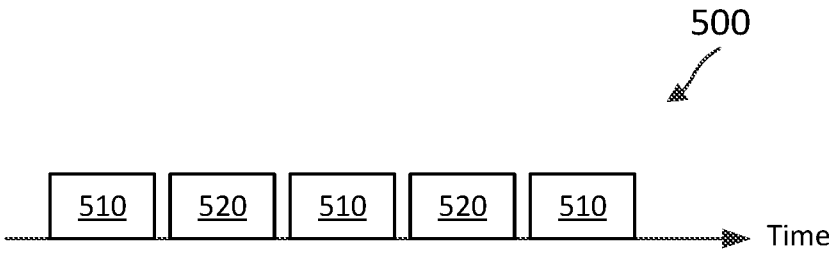
500
510
520
510
520
510
Time

FIG. 5

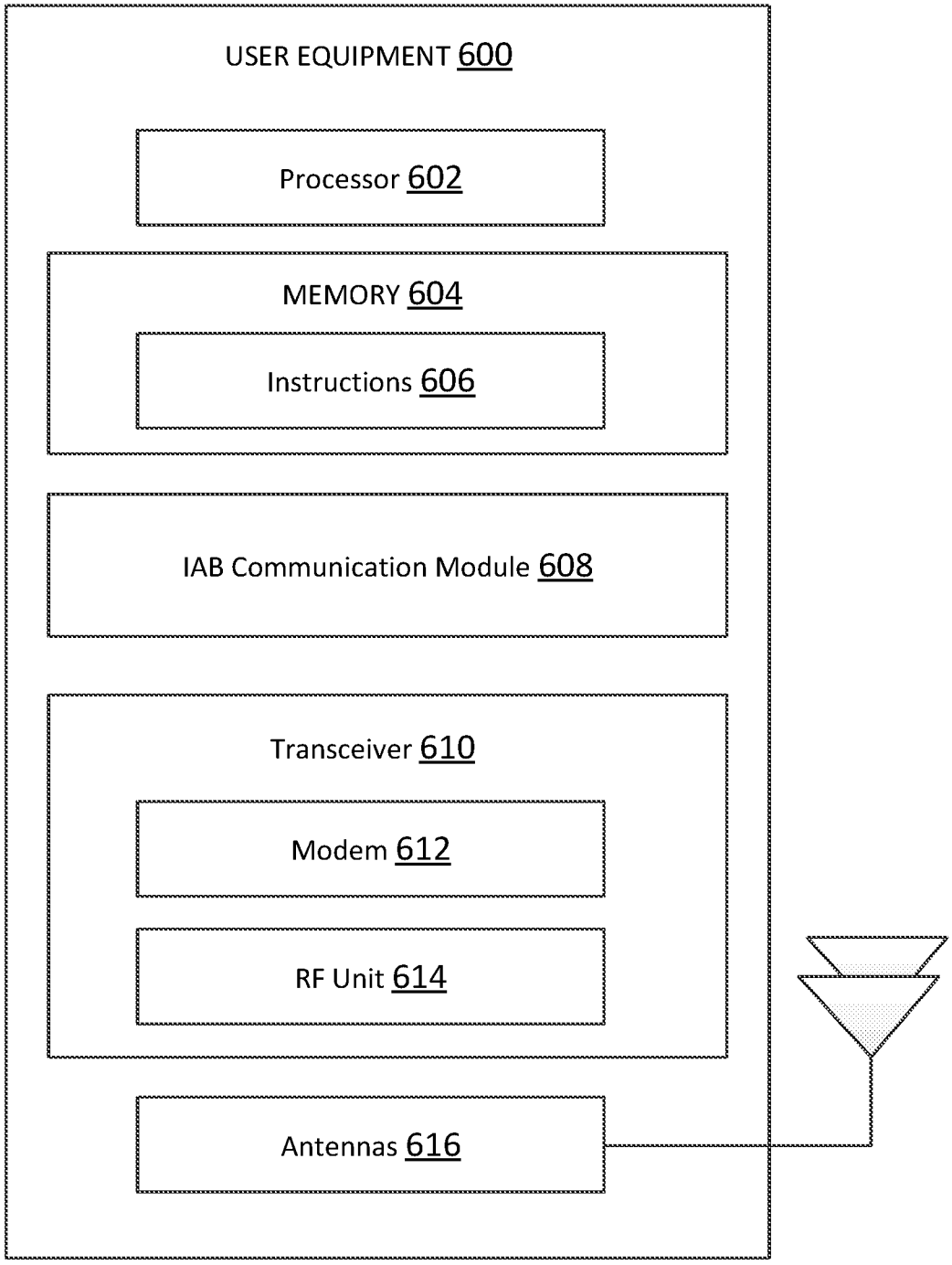
USER EQUIPMENT 600
Processor 602
MEMORY 604
Instructions 606
IAB Communication Module 608
Transceiver 610
Modem 612
RF Unit 614
Antennas 616

FIG. 6

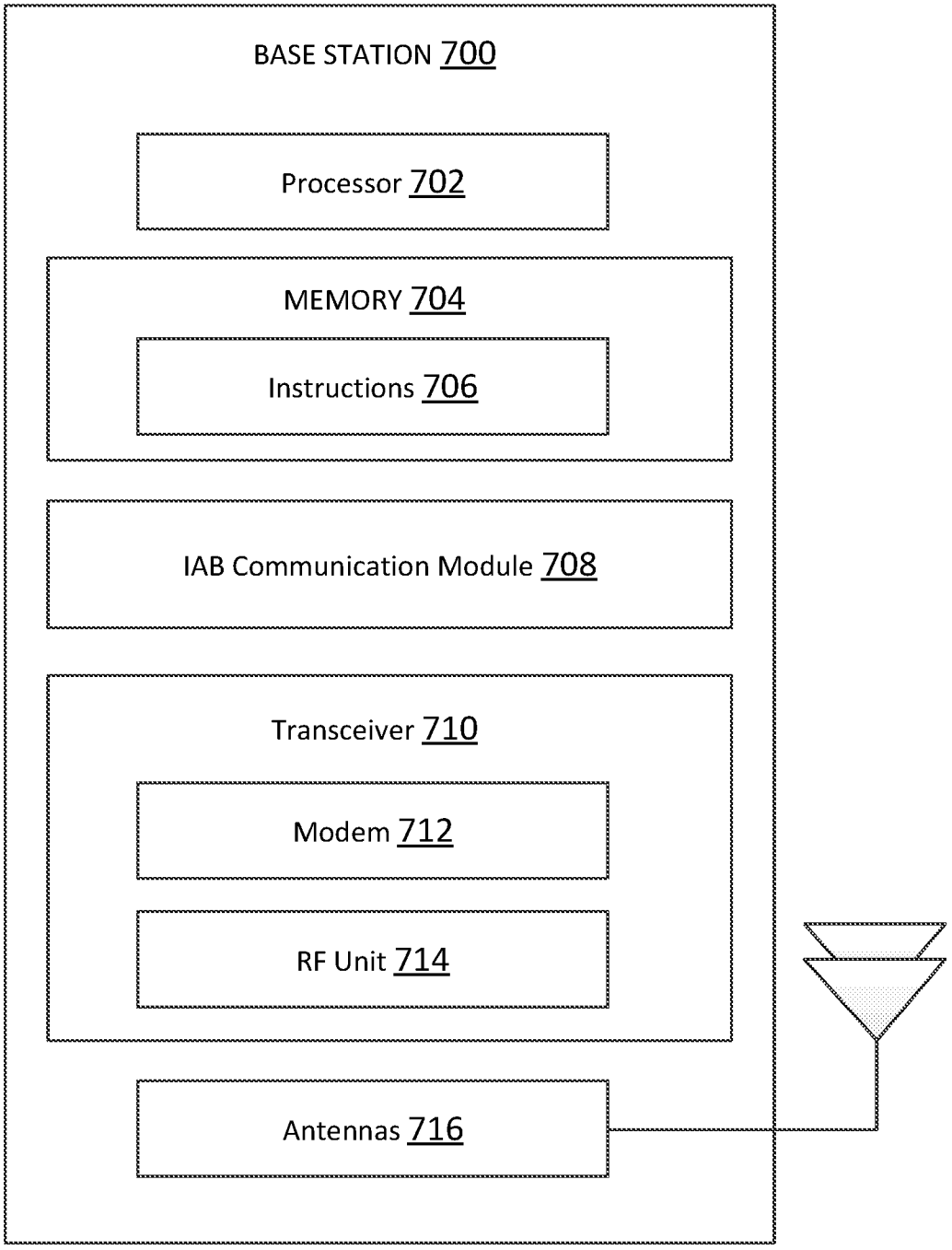
BASE STATION 700
Processor 702
MEMORY 704
Instructions 706
IAB Communication Module 708
Transceiver 710
Modem 712
RF Unit 714
Antennas 716

FIG. 7

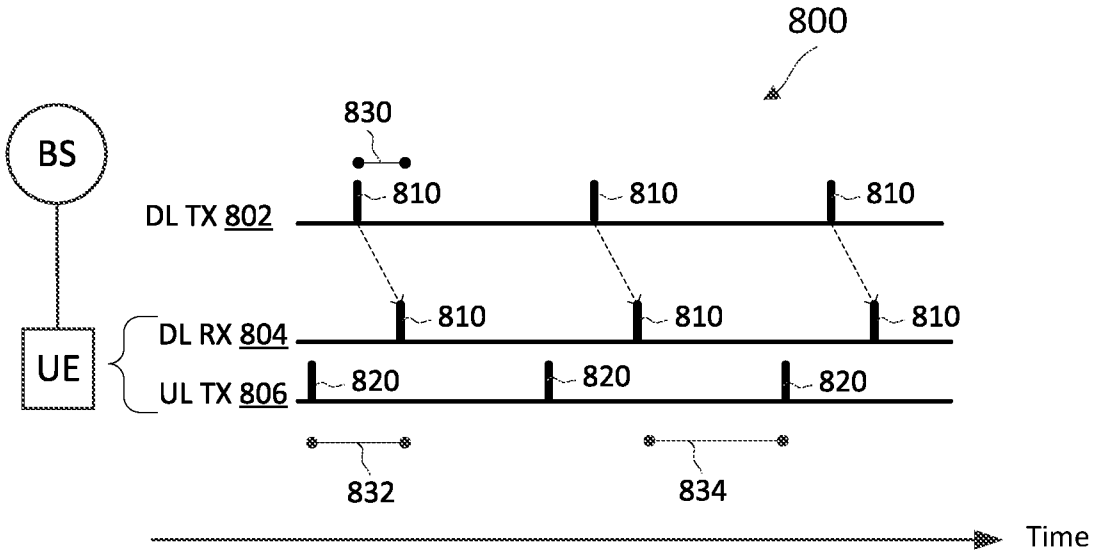
800
BS
UE
830
DL TX 802
DL RX 804
UL TX 806
810
820
832
834
Time

FIG. 8

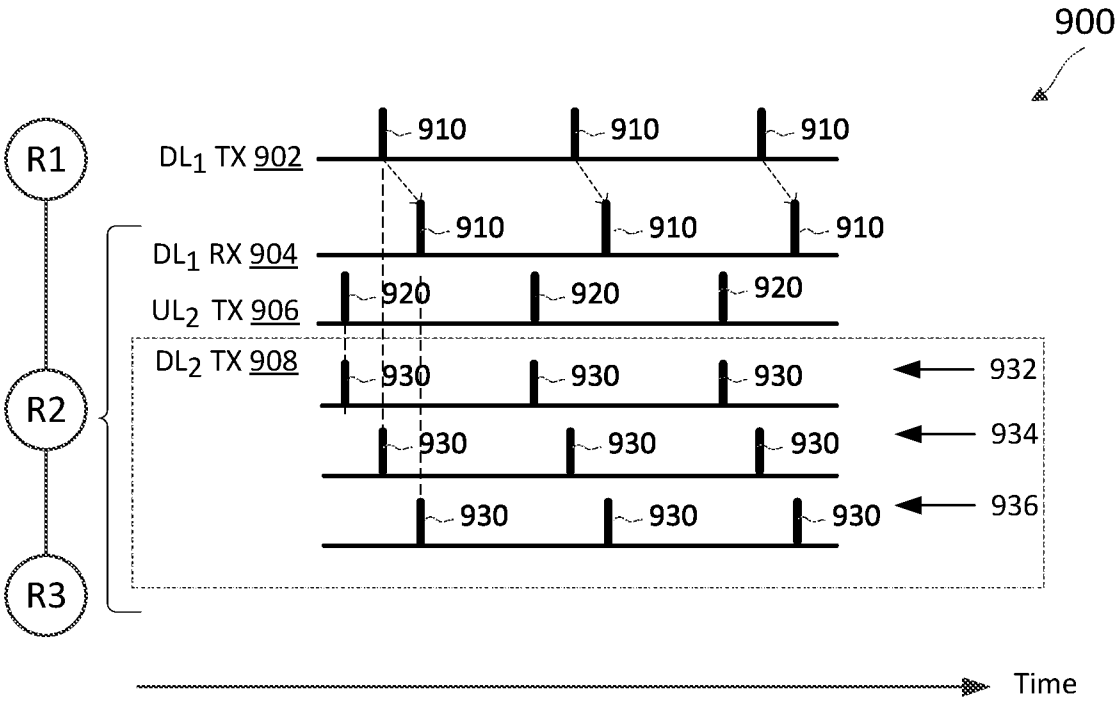
900
R1
R2
R3
DL1 TX 902
DL1 RX 904
UL2 TX 906
DL2 TX 908
910
920
930
932
934
936
Time

FIG. 9

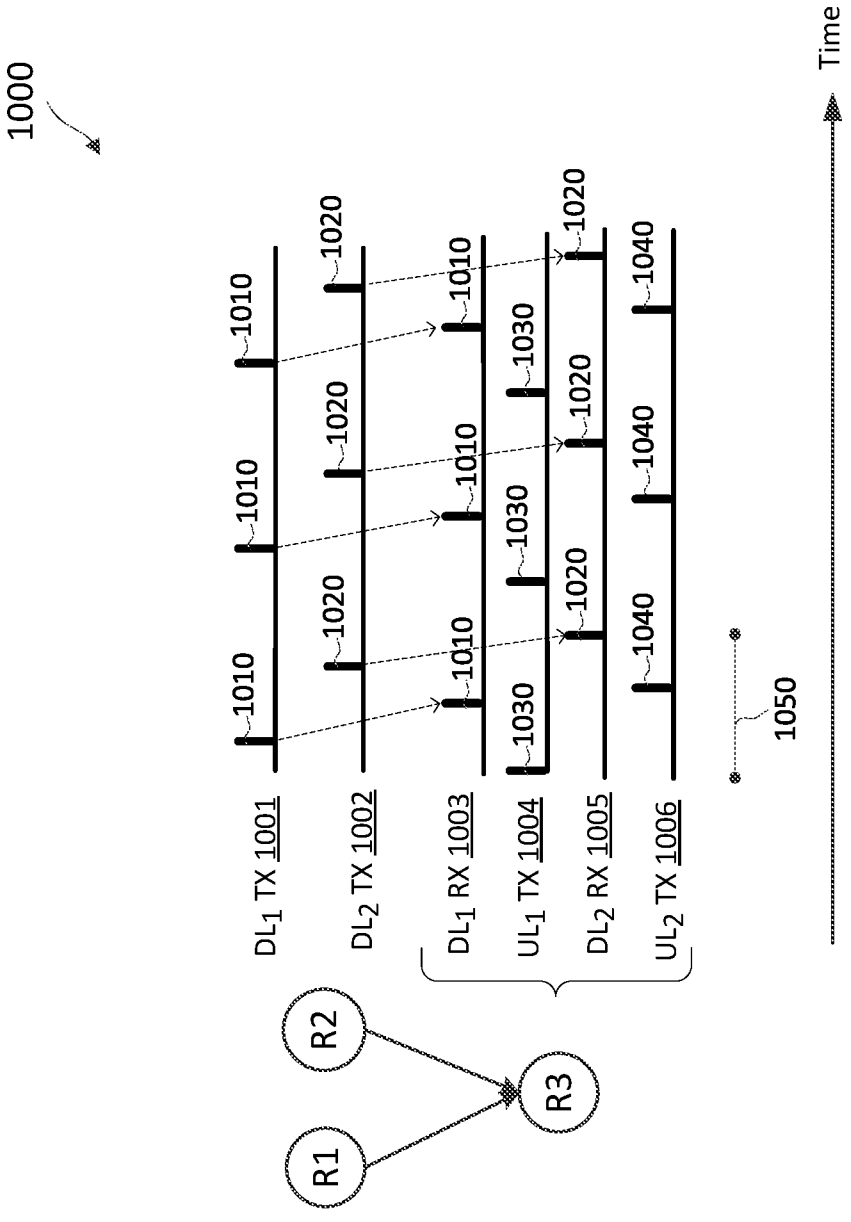
1000
Time
DL1 TX 1001
DL2 TX 1002
DL1 RX 1003
UL1 TX 1004
DL2 RX 1005
UL2 TX 1006
1010
1020
1030
1040
1050
R1
R2
R3

FIG. 10

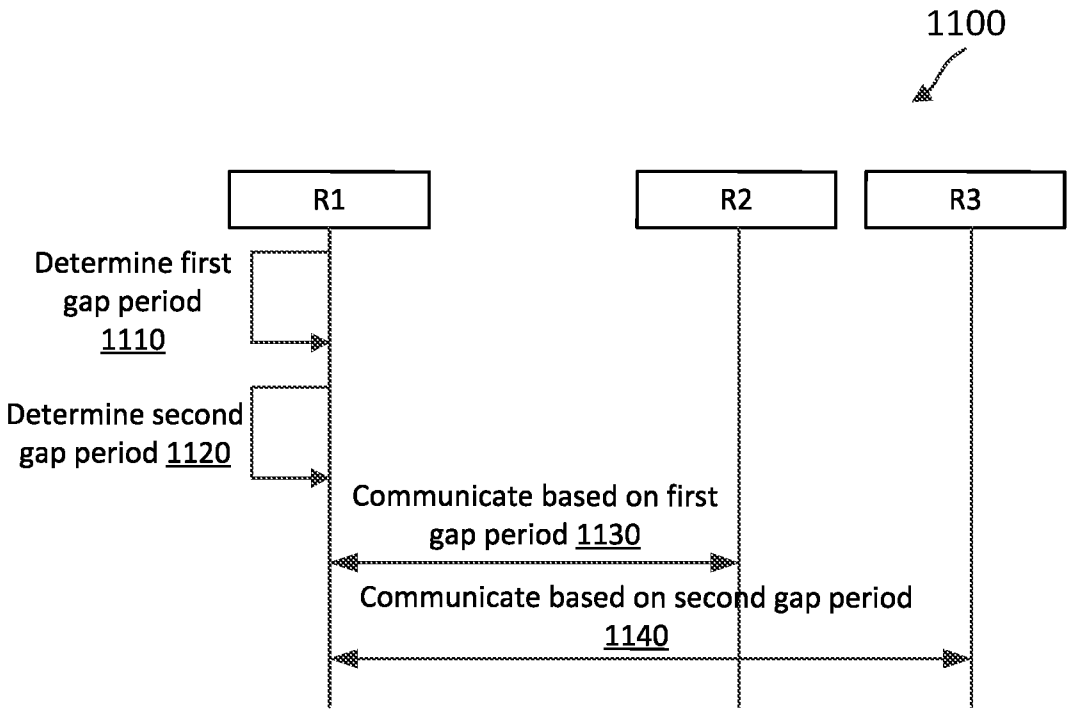
1100
R1
R2
R3
Determine first gap period 1110
Determine second gap period 1120
Communicate based on first gap period 1130
Communicate based on second gap period 1140

FIG. 11

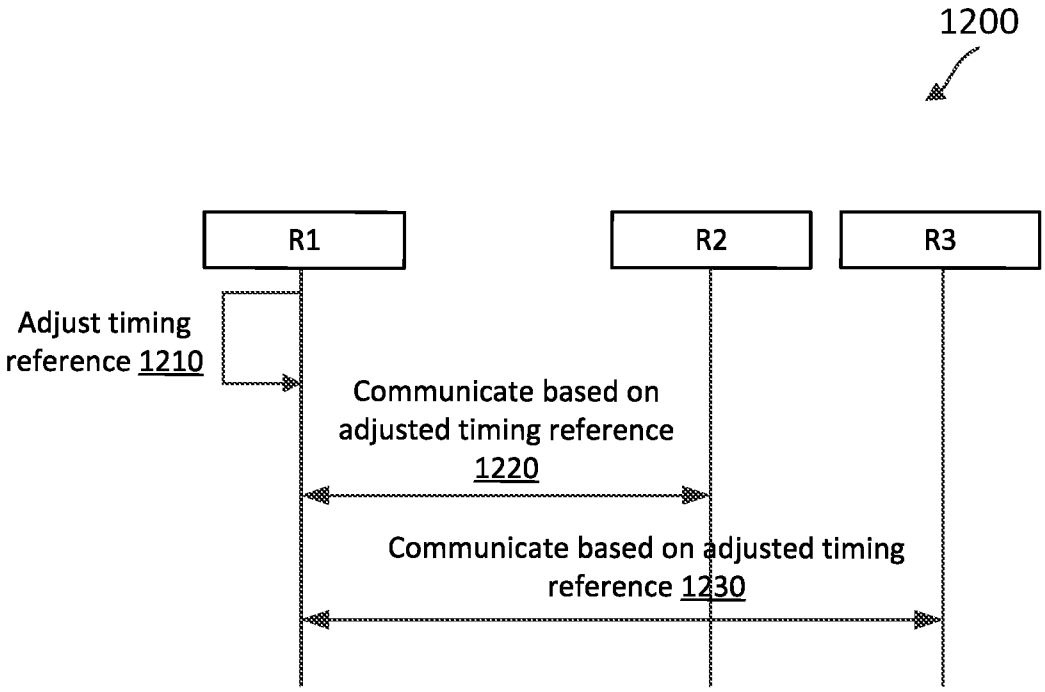
1200
R1
R2
R3
Adjust timing reference 1210
Communicate based on adjusted timing reference 1220
Communicate based on adjusted timing reference 1230

FIG. 12

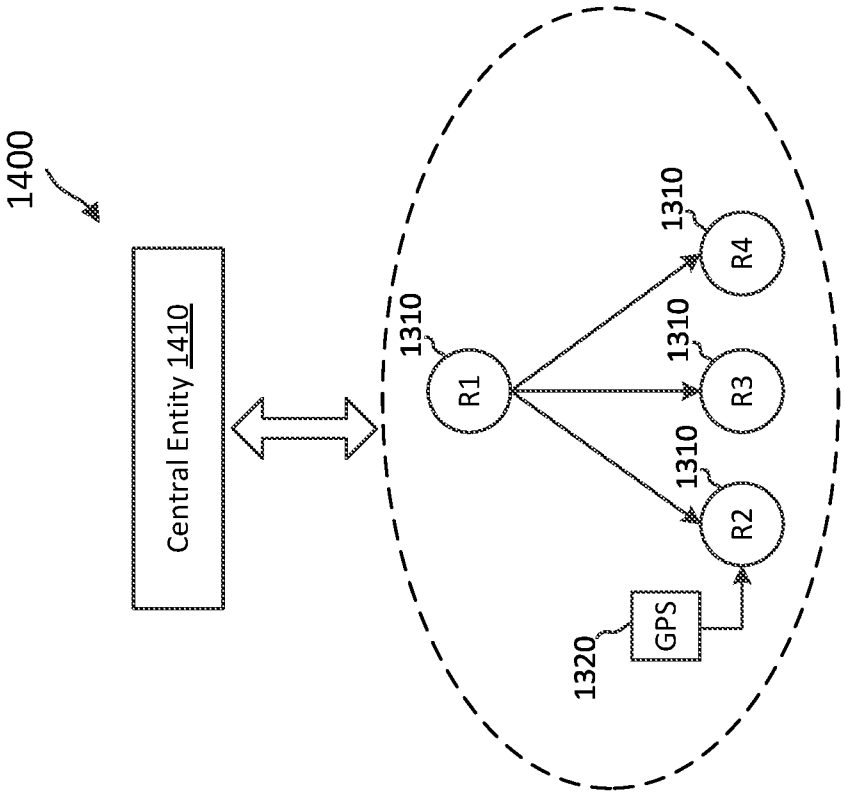
1400
Central Entity 1410
1310
R1
1310
R4
1310
R3
1310
R2
1320
GPS

FIG. 14

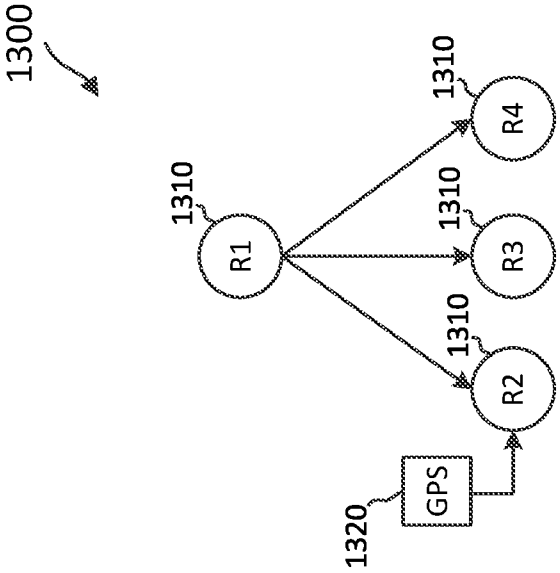
1300
1310
R1
1310
R4
1310
R3
1310
R2
1320
GPS

FIG. 13

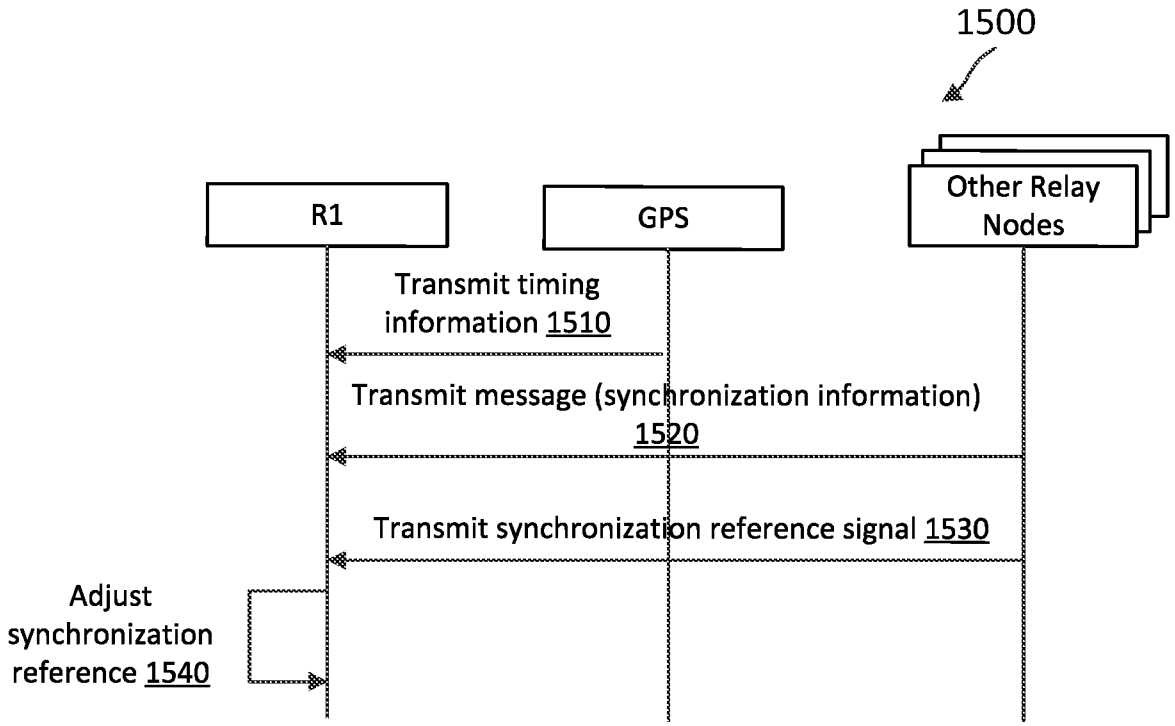
1500
R1
GPS
Other Relay Nodes
Transmit timing information 1510
Transmit message (synchronization information) 1520
Transmit synchronization reference signal 1530
Adjust synchronization reference 1540

FIG. 15

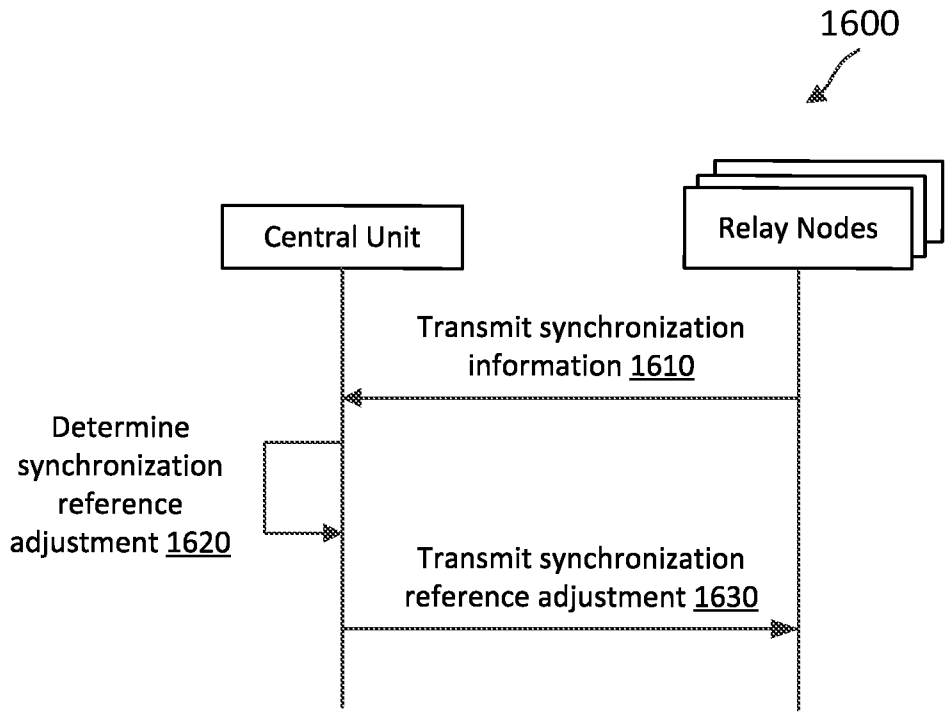
1600
Central Unit
Relay Nodes
Transmit synchronization information 1610
Determine synchronization reference adjustment 1620
Transmit synchronization reference adjustment 1630

FIG. 16

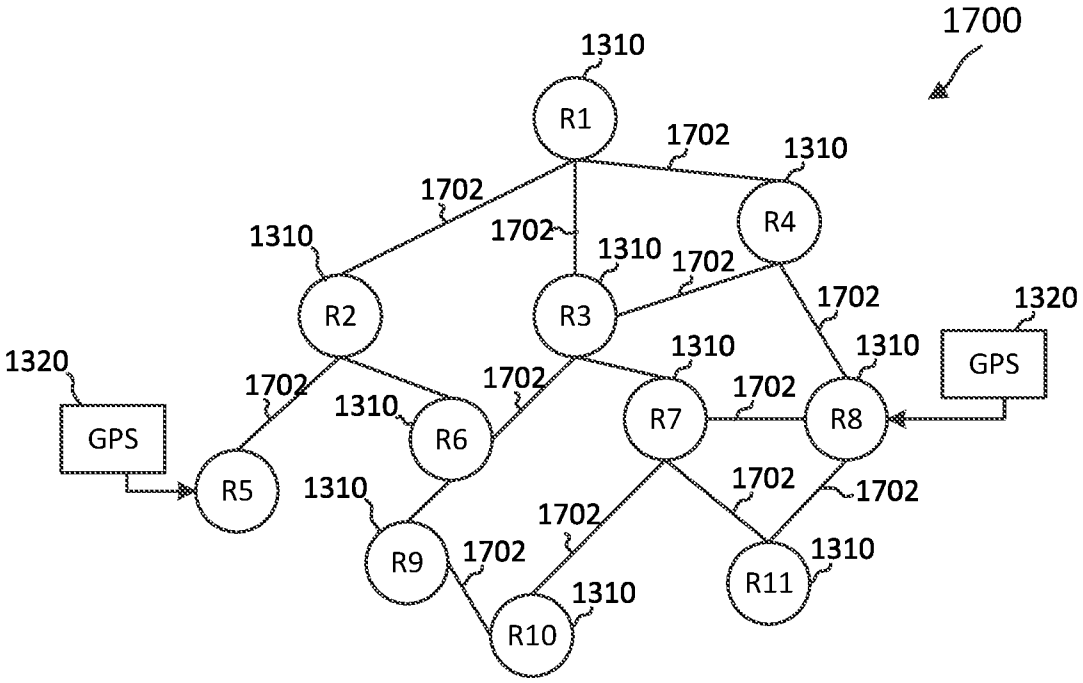
1700
1310
R1
1702
1310
R4
1702
1310
1702
1310
R2
R3
1702
1320
GPS
1320
1310
1310
1702
1702
1310
R6
R7
1702
R8
GPS
R5
1310
1702
1702
1702
R9
1702
1310
R11
1310
R10

FIG. 17

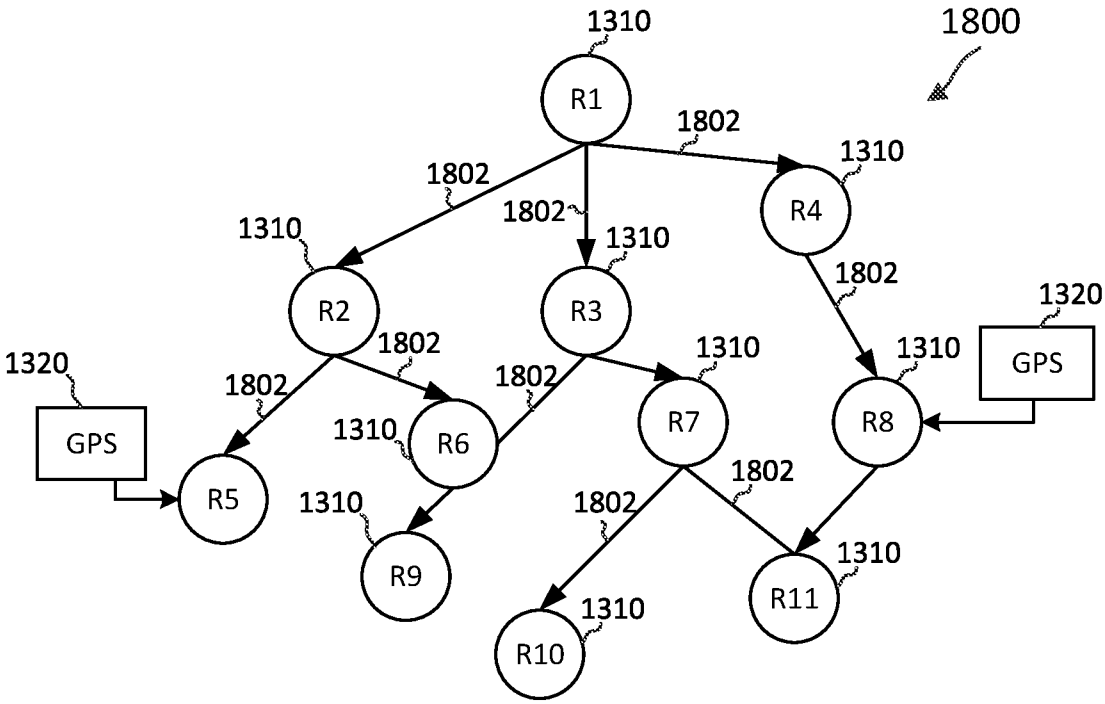
1800
1310
R1
1802
1310
1802
R4
1802
1310
1310
1802
R2
R3
1320
GPS
1802
1310
1310
1320
1802
1802
R7
R8
GPS
1310
R6
R5
1802
1310
1802
R9
1310
R11
1310
R10

FIG. 18

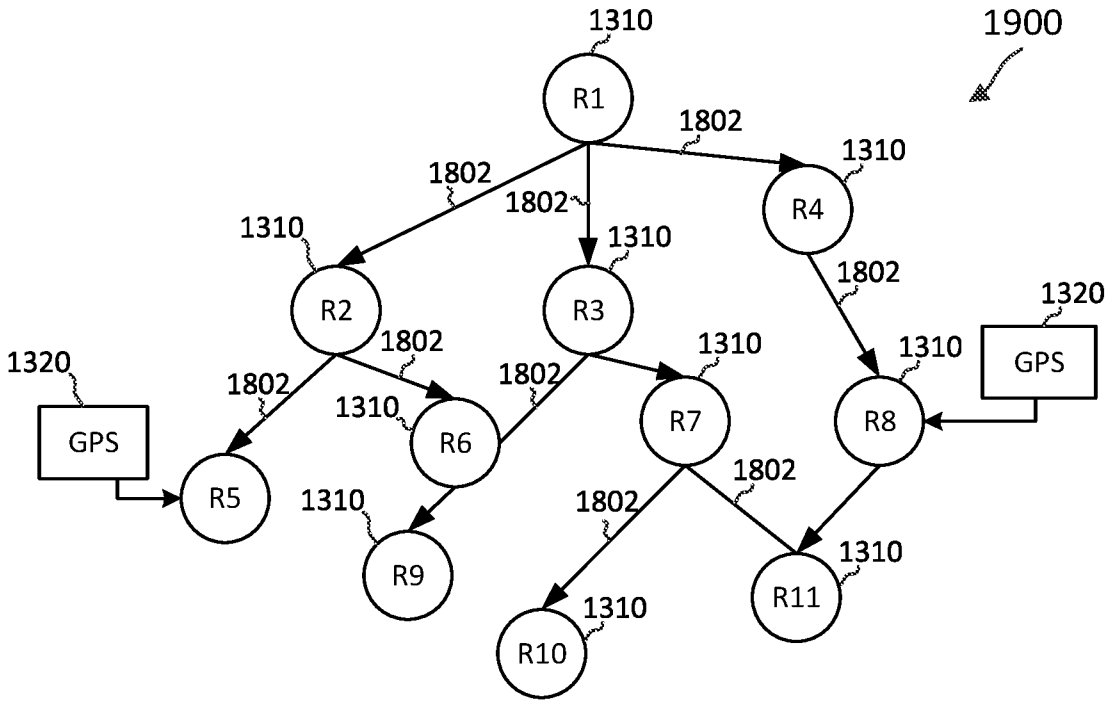
1900
1310
R1
1802
1310
R4
1802
1802
1310
R2
1310
R3
1802
1320
GPS
1802
1310
1310
1320
GPS
1802
1802
1310
R6
R7
R8
R5
1310
1802
1802
R9
1310
R11
1310
R10

FIG. 19

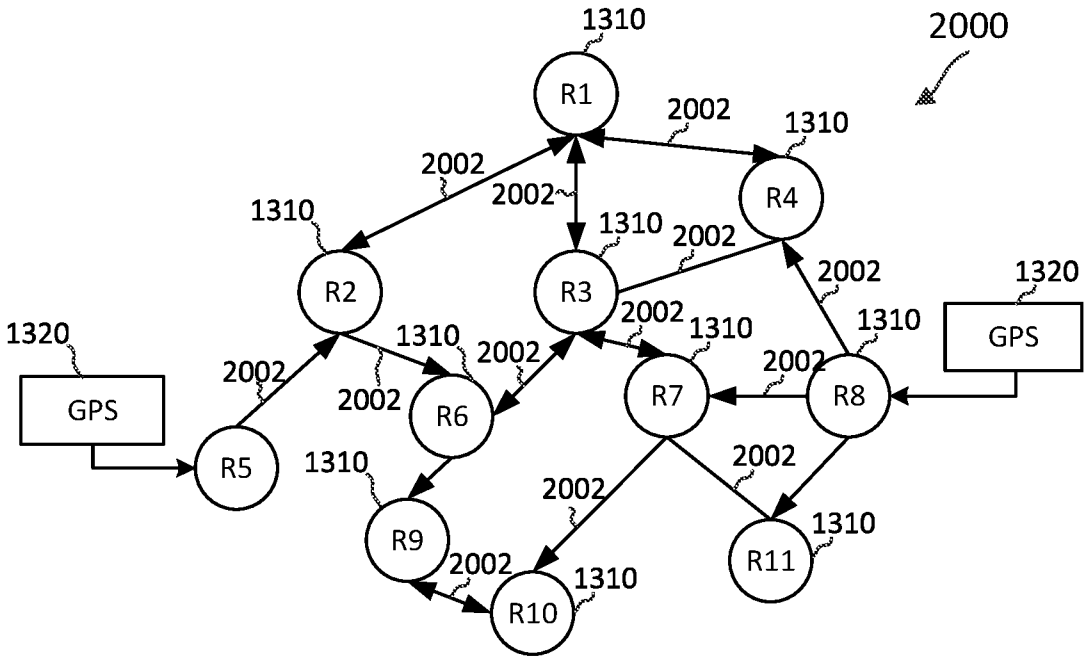
2000
1310
R1
2002
1310
2002
R4
2002
1310
1310
2002
R2
R3
2002
1320
GPS
1320
2002
1310
1310
2002
1310
2002
GPS
2002
2002
R6
R7
R8
R5
1310
2002
2002
R9
1310
R11
2002
1310
R10

FIG. 20

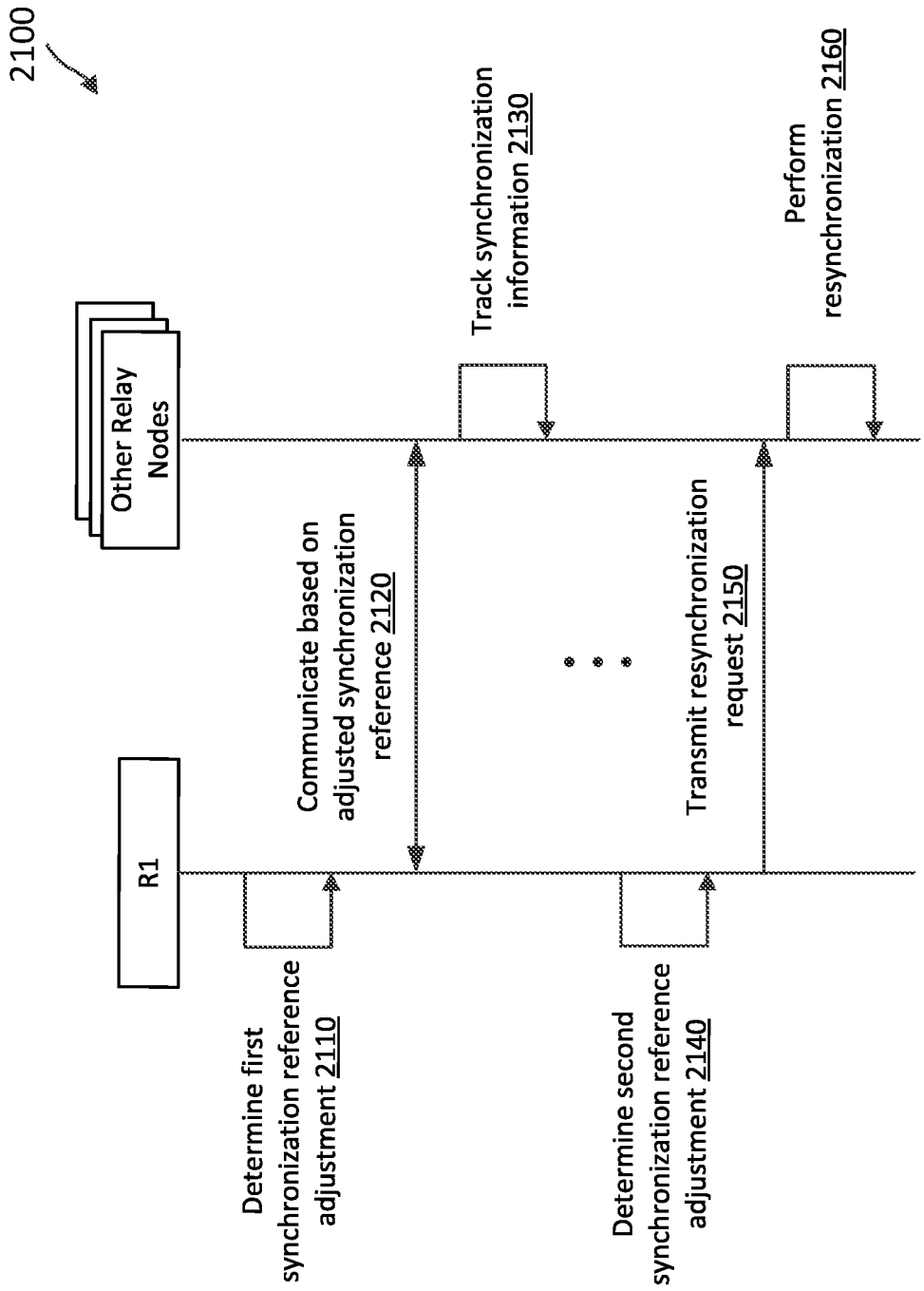
2100
Other Relay Nodes
R1
Track synchronization information 2130
Perform resynchronization 2160
Communicate based on adjusted synchronization reference 2120
Transmit resynchronization request 2150
Determine first synchronization reference adjustment 2110
Determine second synchronization reference adjustment 2140

FIG. 21

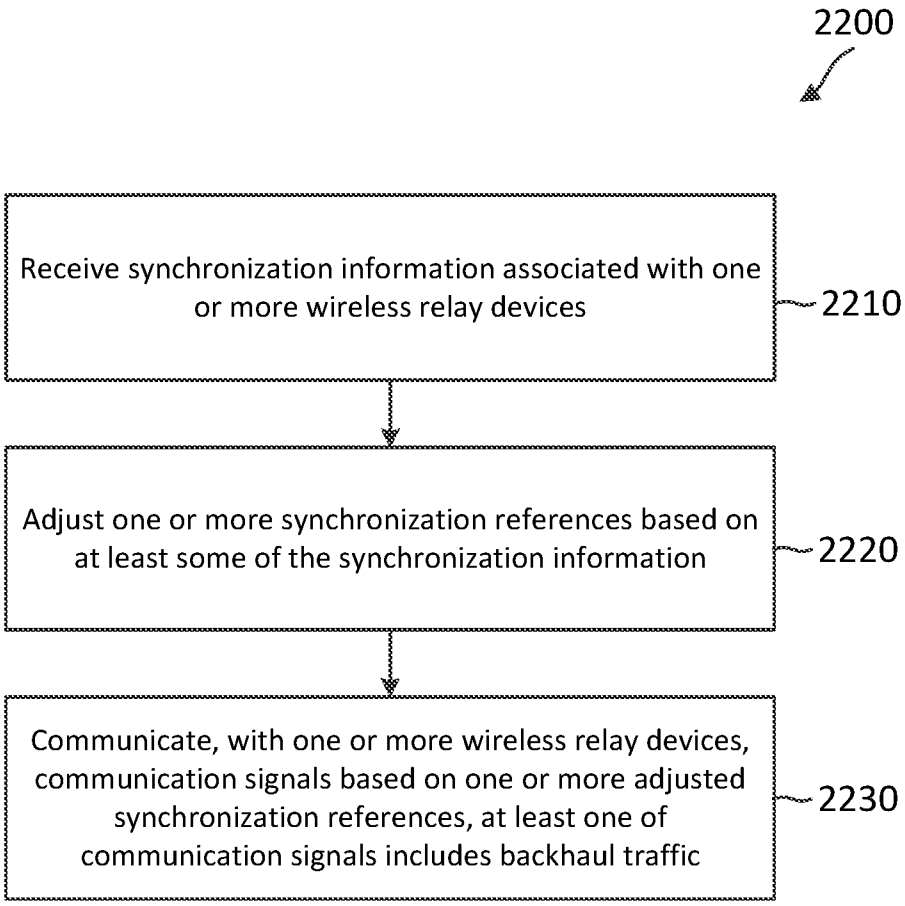
2200
Receive synchronization information associated with one or more wireless relay devices
2210
Adjust one or more synchronization references based on at least some of the synchronization information
2220
Communicate, with one or more wireless relay devices, communication signals based on one or more adjusted synchronization references, at least one of communication signals includes backhaul traffic
2230

FIG. 22

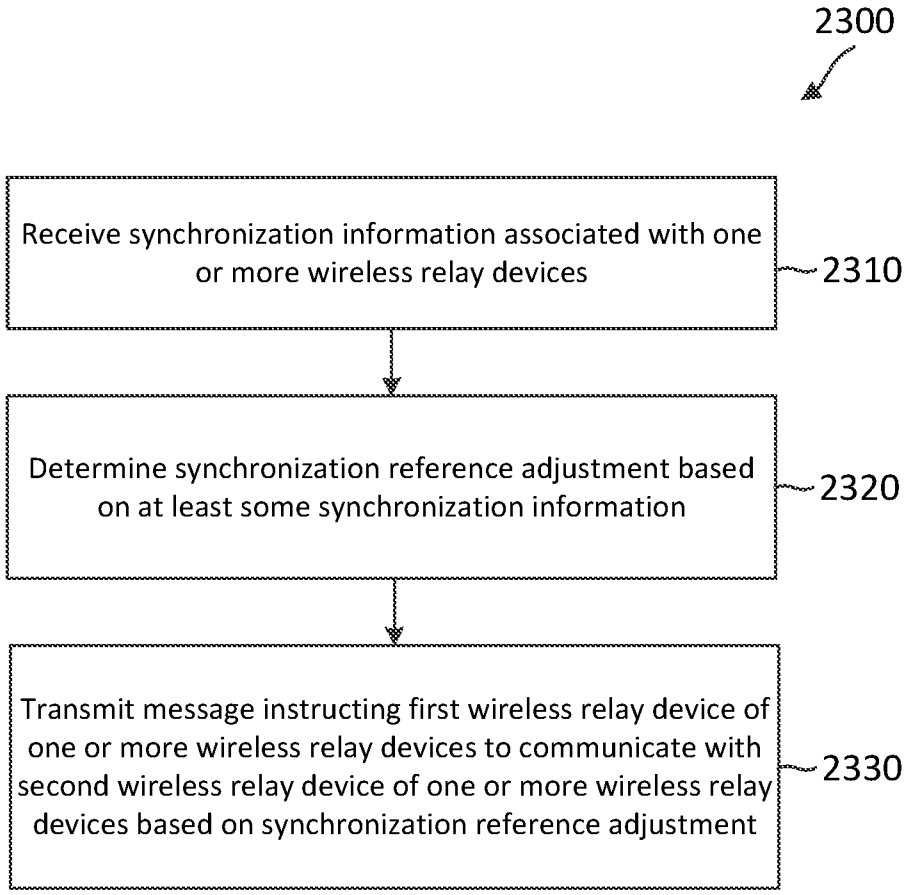
2300
Receive synchronization information associated with one or more wireless relay devices
2310
Determine synchronization reference adjustment based on at least some synchronization information
2320
Transmit message instructing first wireless relay device of one or more wireless relay devices to communicate with second wireless relay device of one or more wireless relay devices based on synchronization reference adjustment
2330

FIG. 23