FIG.1

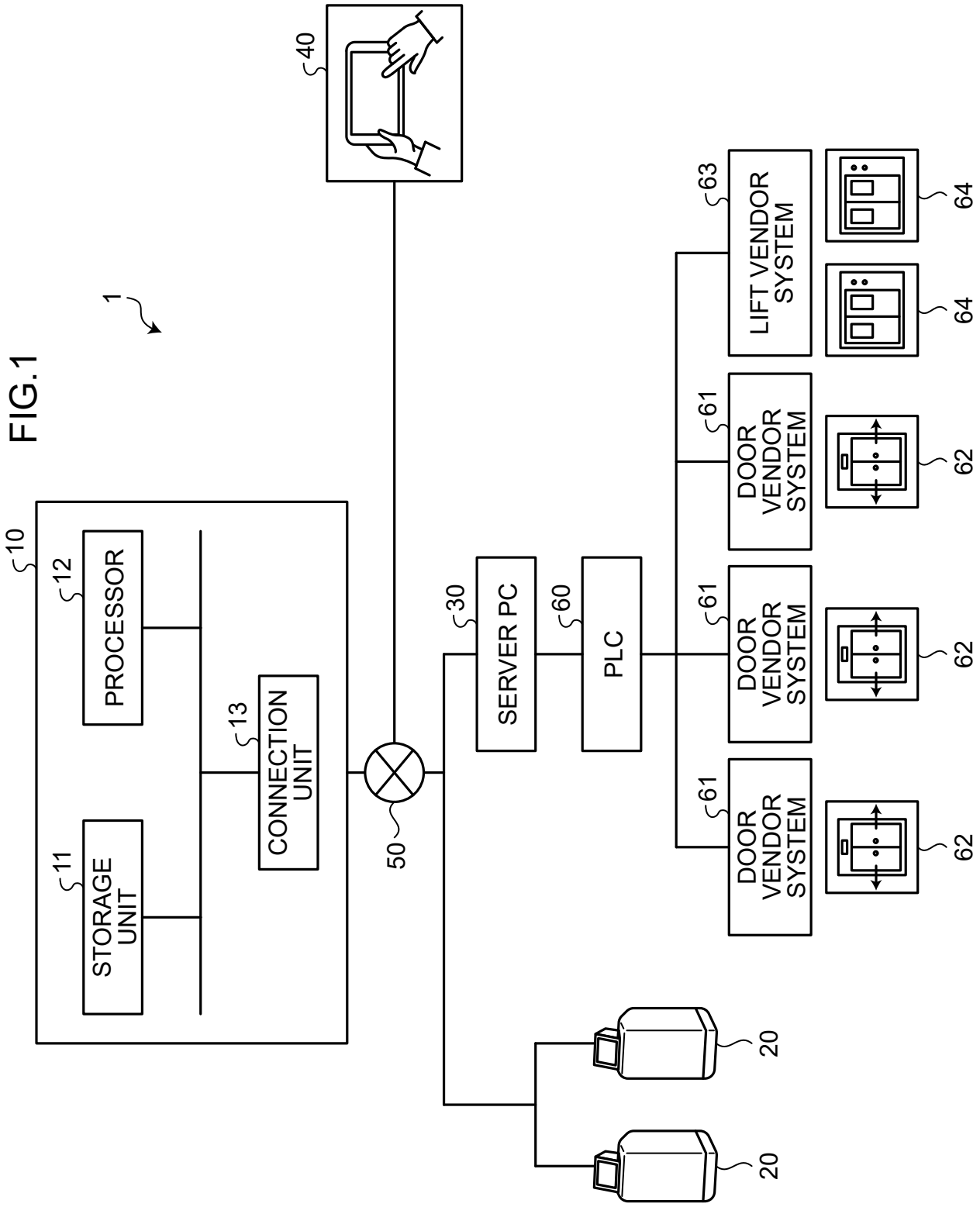
1
10
12
PROCESSOR
11
STORAGE UNIT
13
CONNECTION UNIT
50
40
30
SERVER PC
60
PLC
61
DOOR VENDOR SYSTEM
61
DOOR VENDOR SYSTEM
61
DOOR VENDOR SYSTEM
63
LIFT VENDOR SYSTEM
62
62
62
64
64
20
20

FIG.2

TASK IDENTIFICATION INFORMATION	NAME OF TASK	ROBOT IDENTIFICATION INFORMATION	STATE OF ROBOT	DESTINA-TION	TASK REQUEST TIME	TASK START TIME	TASK END TIME	STATE OF TASK
00-0000-0011	CALL TASK	AA-xyz	reserved	○○	XX:XX	XX:XY	ZZ:AA	CANCEL
00-0000-0012	SEQUENTIAL DELIVERY TASK	BB-abc	reserved	□□	YY:YY	YY:YZ	AA:BB	COMPLETE
⋮								

FIG.3

ROBOT IDENTIFICATION INFORMATION	BATTERY INFORMATION	CONNECTION INFORMATION	DOOR INFORMATION	STATE OF ROBOT	NAME OF TASK	TASK IDENTIFICATION INFORMATION
AA-xxx	MIDDLE		OPEN	free	-	-
AB-xyy	LOW		OPEN	reserved	SEQUENTIAL DELIVERY TASK	00-0000-0012

⋮

FIG.4

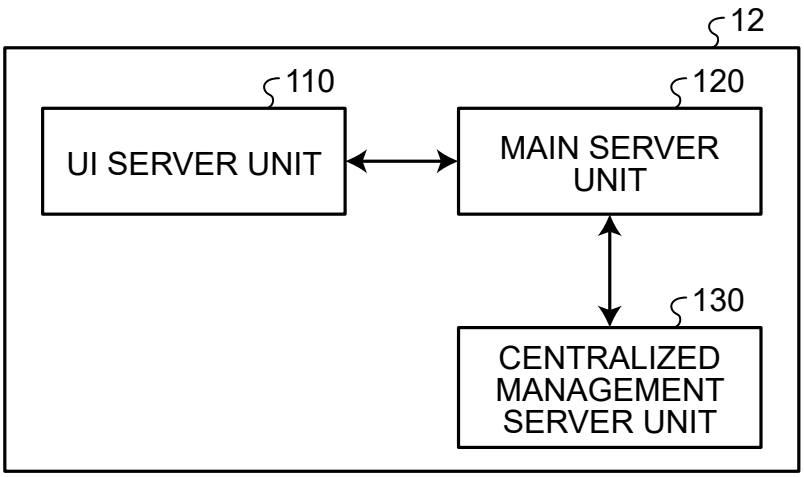
12
110
120
UI SERVER UNIT
MAIN SERVER UNIT
130
CENTRALIZED MANAGEMENT SERVER UNIT

FIG.5

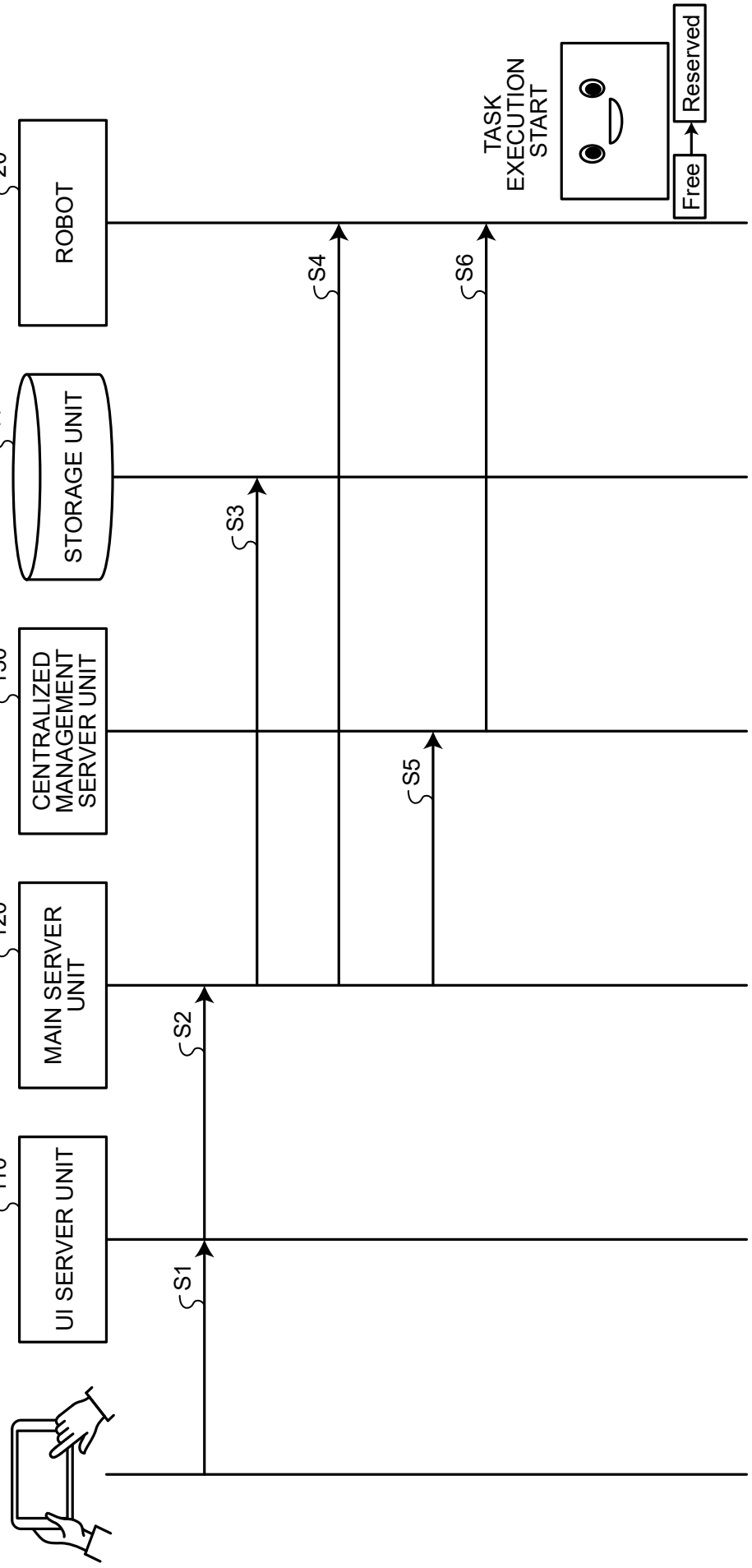
UI SERVER UNIT
110
MAIN SERVER UNIT
120
CENTRALIZED MANAGEMENT SERVER UNIT
130
STORAGE UNIT
11
ROBOT
20
S1
S2
S3
S4
S5
S6
TASK EXECUTION START
Free
Reserved

FIG.6

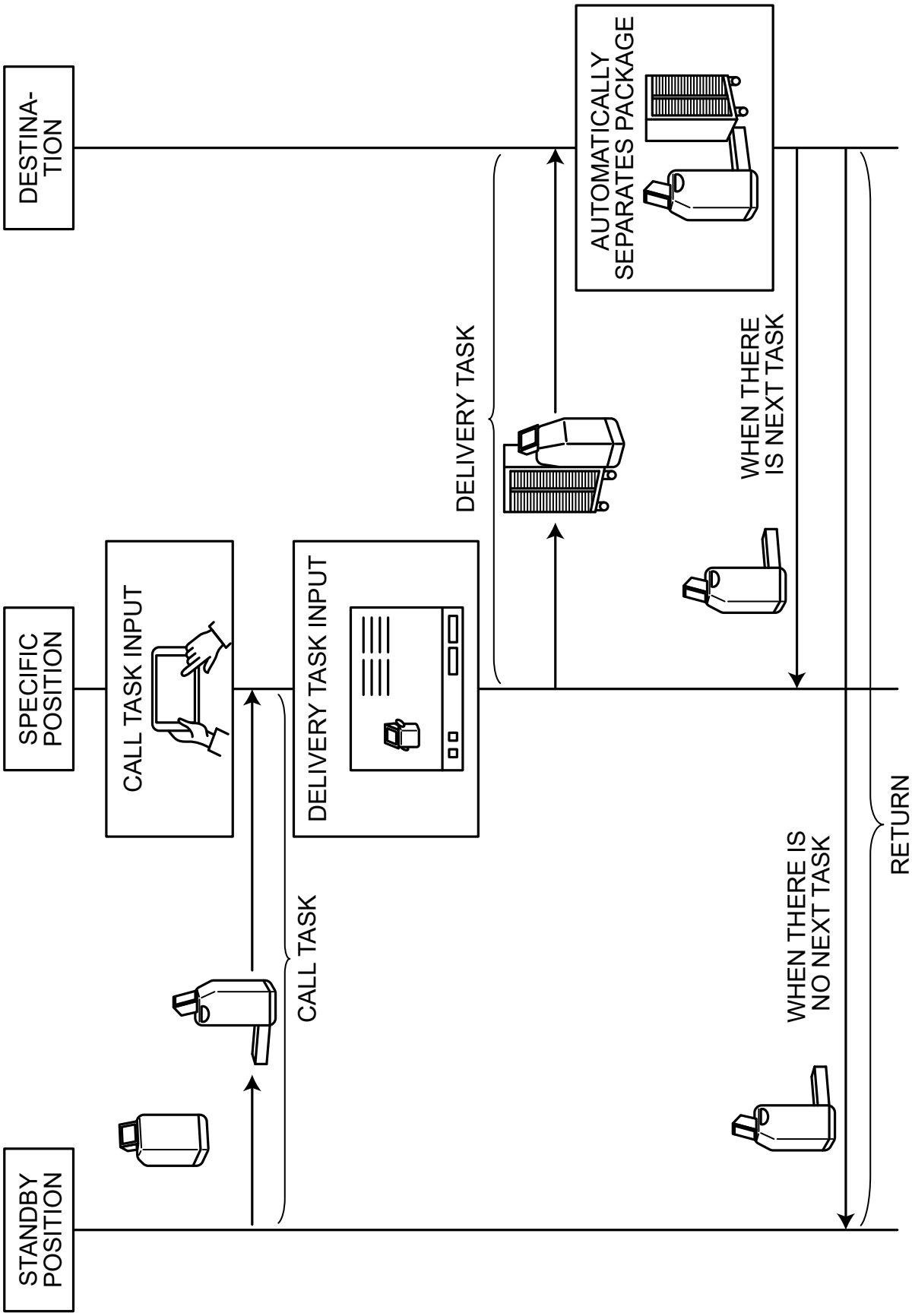
STANDBY POSITION
SPECIFIC POSITION
DESTINA-TION
CALL TASK INPUT
DELIVERY TASK INPUT
AUTOMATICALLY SEPARATES PACKAGE
CALL TASK
DELIVERY TASK
WHEN THERE IS NEXT TASK
WHEN THERE IS NO NEXT TASK
RETURN

FIG.7

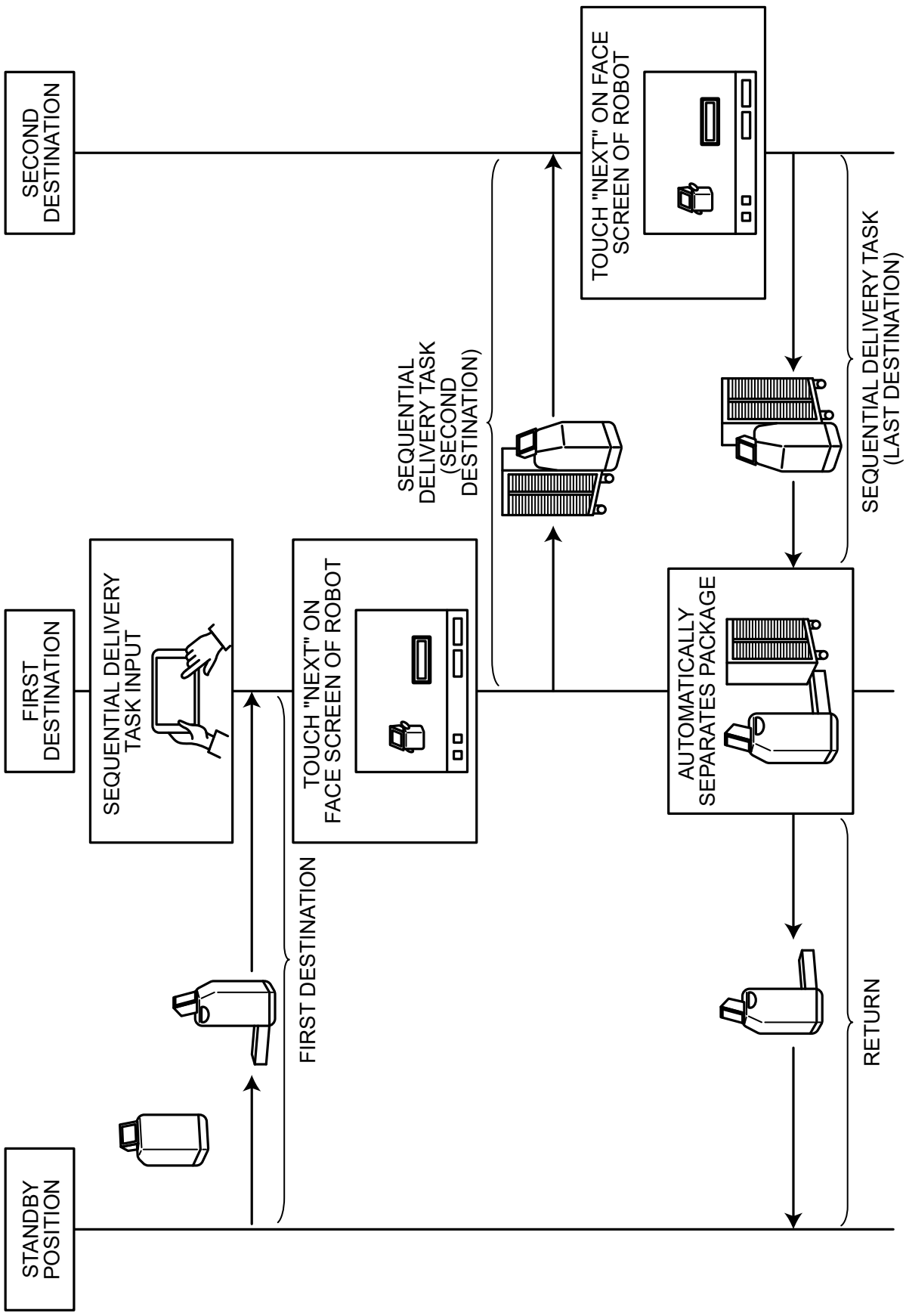
STANDBY POSITION
FIRST DESTINATION
SECOND DESTINATION
SEQUENTIAL DELIVERY TASK INPUT
TOUCH "NEXT" ON FACE SCREEN OF ROBOT
TOUCH "NEXT" ON FACE SCREEN OF ROBOT
AUTOMATICALLY SEPARATES PACKAGE
FIRST DESTINATION
SEQUENTIAL DELIVERY TASK (SECOND DESTINATION)
SEQUENTIAL DELIVERY TASK (LAST DESTINATION)
RETURN

FIG.8

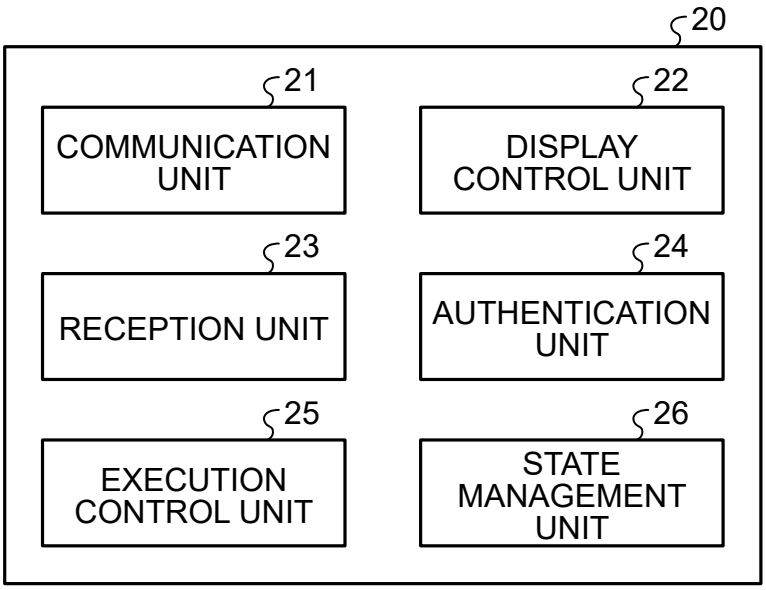
20
21
COMMUNICATION UNIT
22
DISPLAY CONTROL UNIT
23
RECEPTION UNIT
24
AUTHENTICATION UNIT
25
EXECUTION CONTROL UNIT
26
STATE MANAGEMENT UNIT

FIG.9

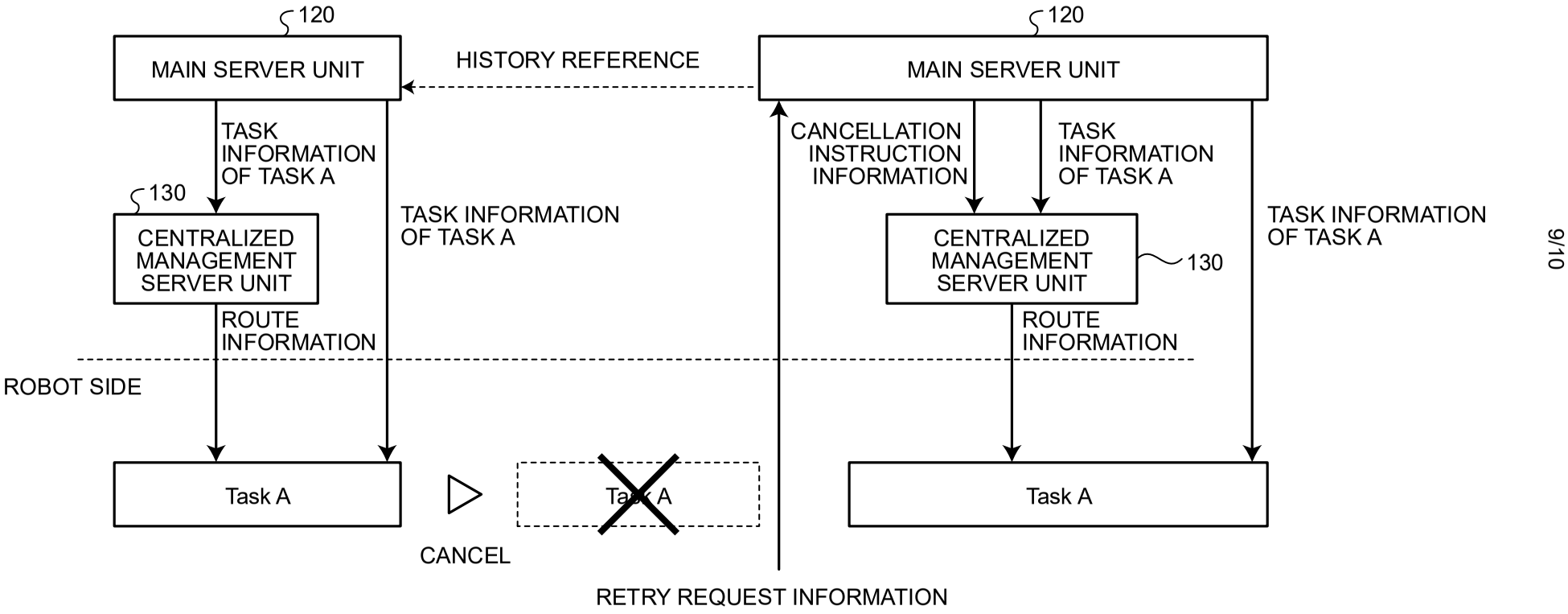
120
MAIN SERVER UNIT
HISTORY REFERENCE
120
MAIN SERVER UNIT
TASK INFORMATION OF TASK A
CANCELLATION INSTRUCTION INFORMATION
TASK INFORMATION OF TASK A
130
CENTRALIZED MANAGEMENT SERVER UNIT
TASK INFORMATION OF TASK A
CENTRALIZED MANAGEMENT SERVER UNIT
130
TASK INFORMATION OF TASK A
ROUTE INFORMATION
ROUTE INFORMATION
ROBOT SIDE
Task A
Task A
Task A
CANCEL
RETRY REQUEST INFORMATION

FIG.10

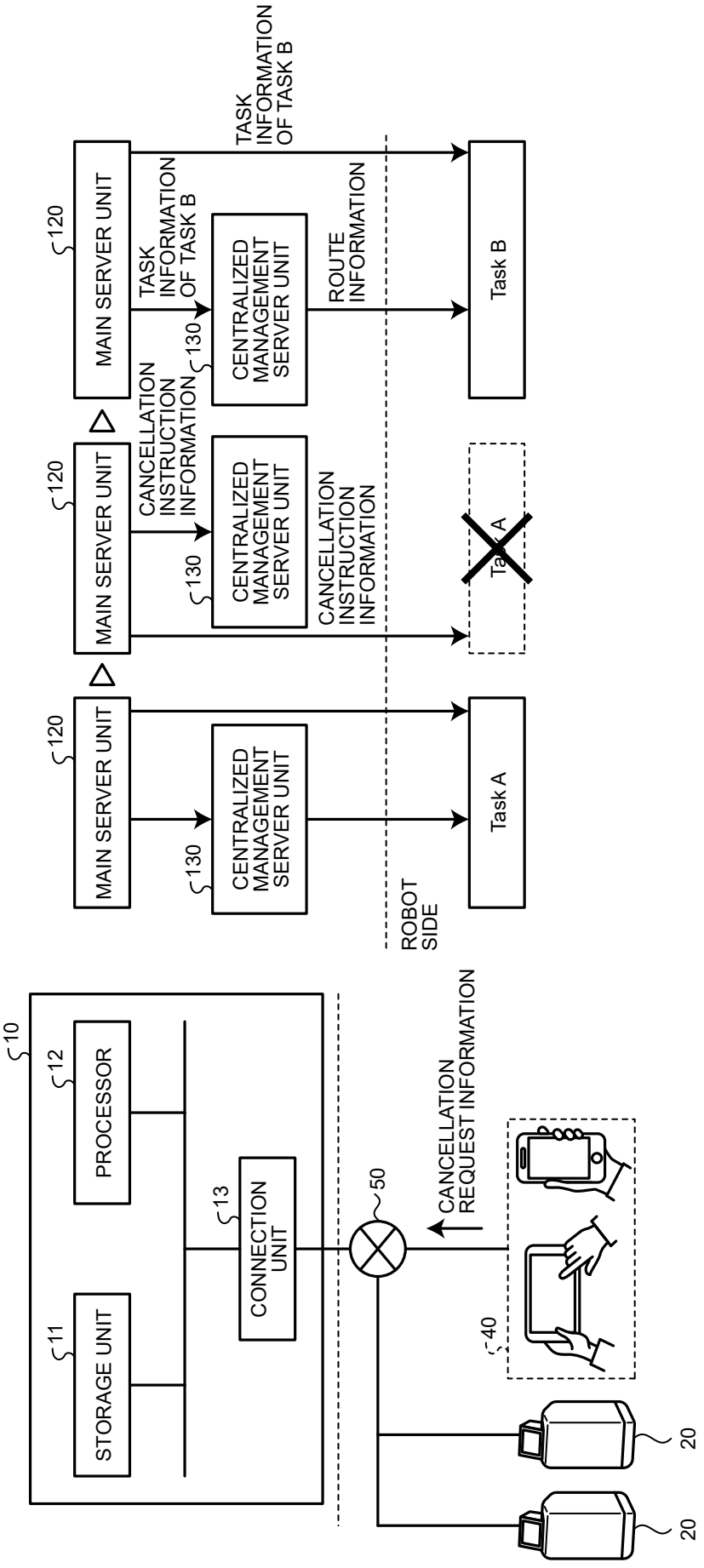
10
PROCESSOR
12
STORAGE UNIT
11
CONNECTION UNIT
13
50
CANCELLATION REQUEST INFORMATION
40
20
20
ROBOT SIDE
MAIN SERVER UNIT
120
CENTRALIZED MANAGEMENT SERVER UNIT
130
Task A
Task B
CANCELLATION INSTRUCTION INFORMATION
TASK INFORMATION OF TASK B
ROUTE INFORMATION