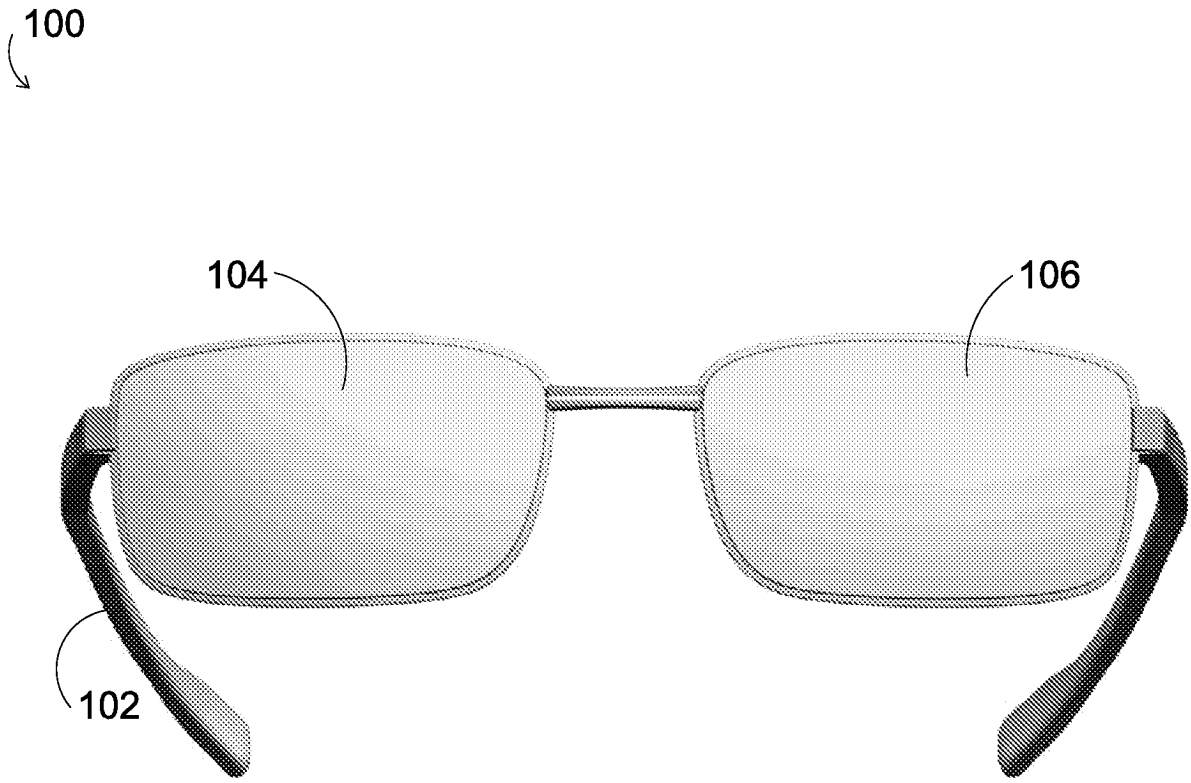

FIGURE 1

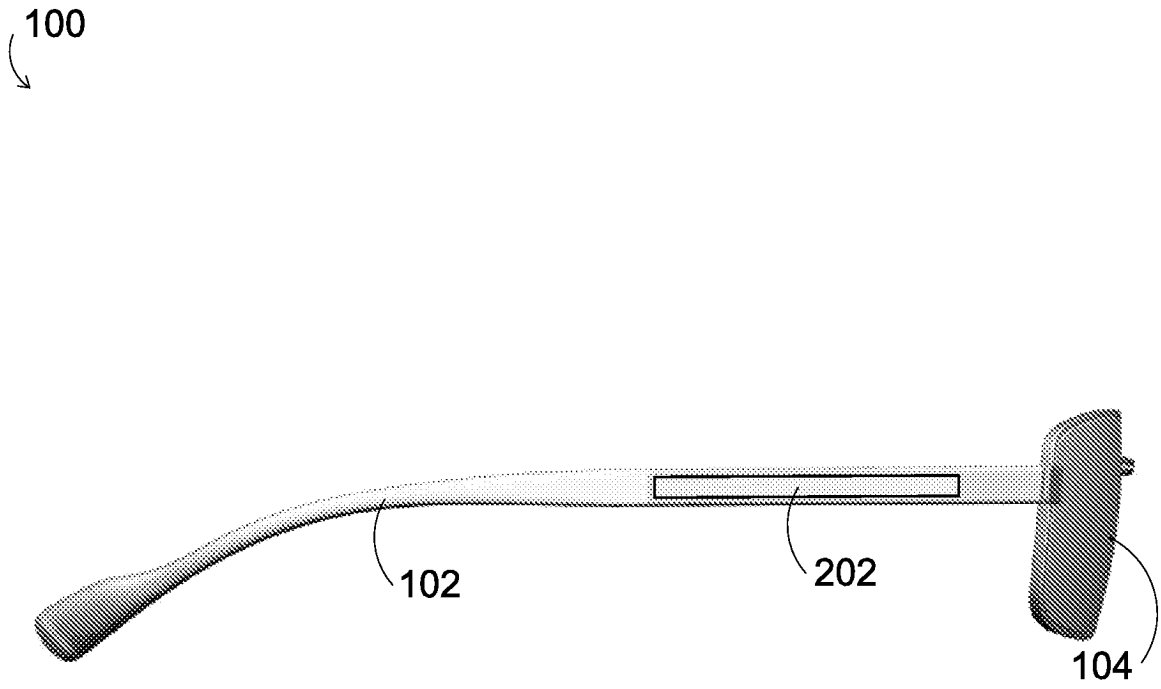

FIGURE 2

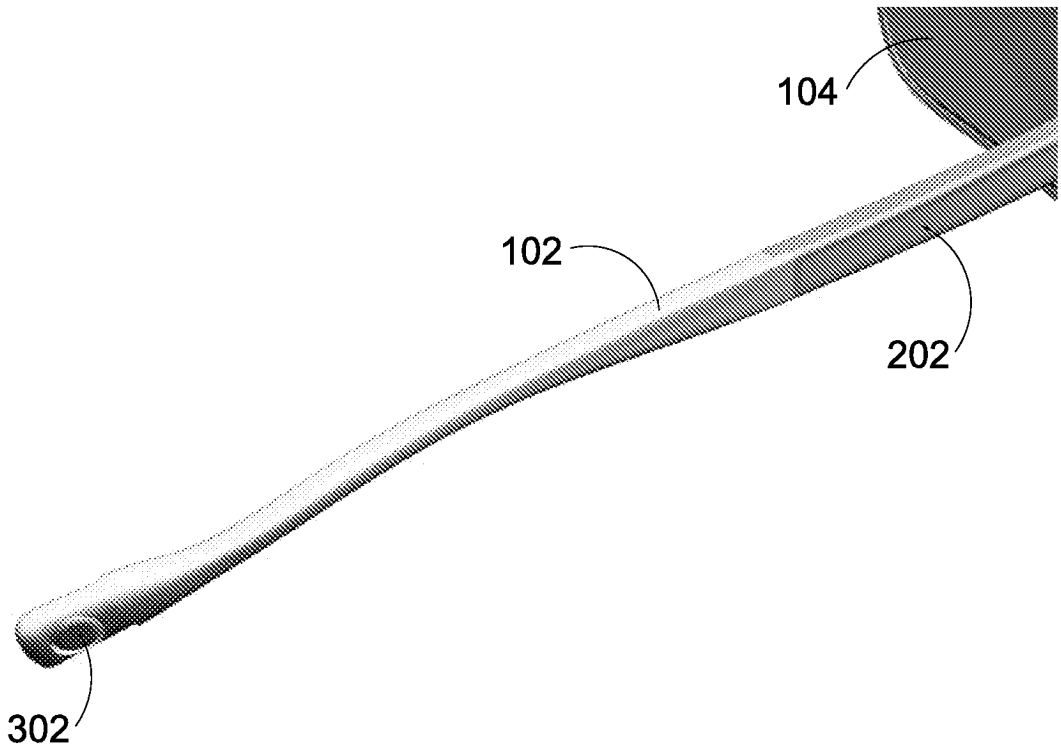

FIGURE 3

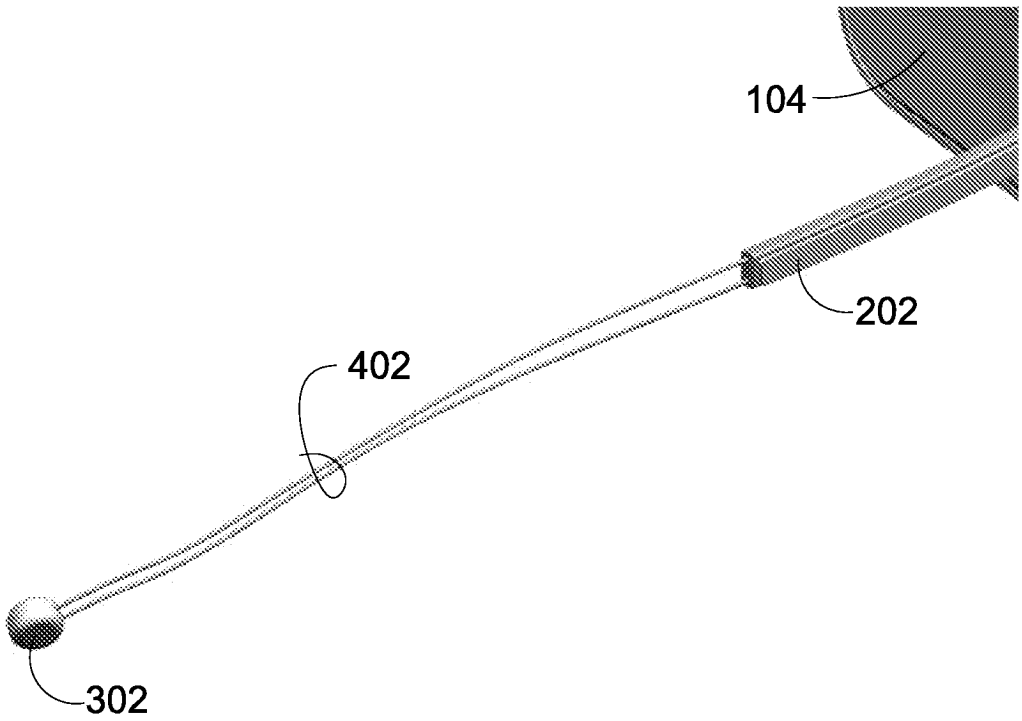

FIGURE 4

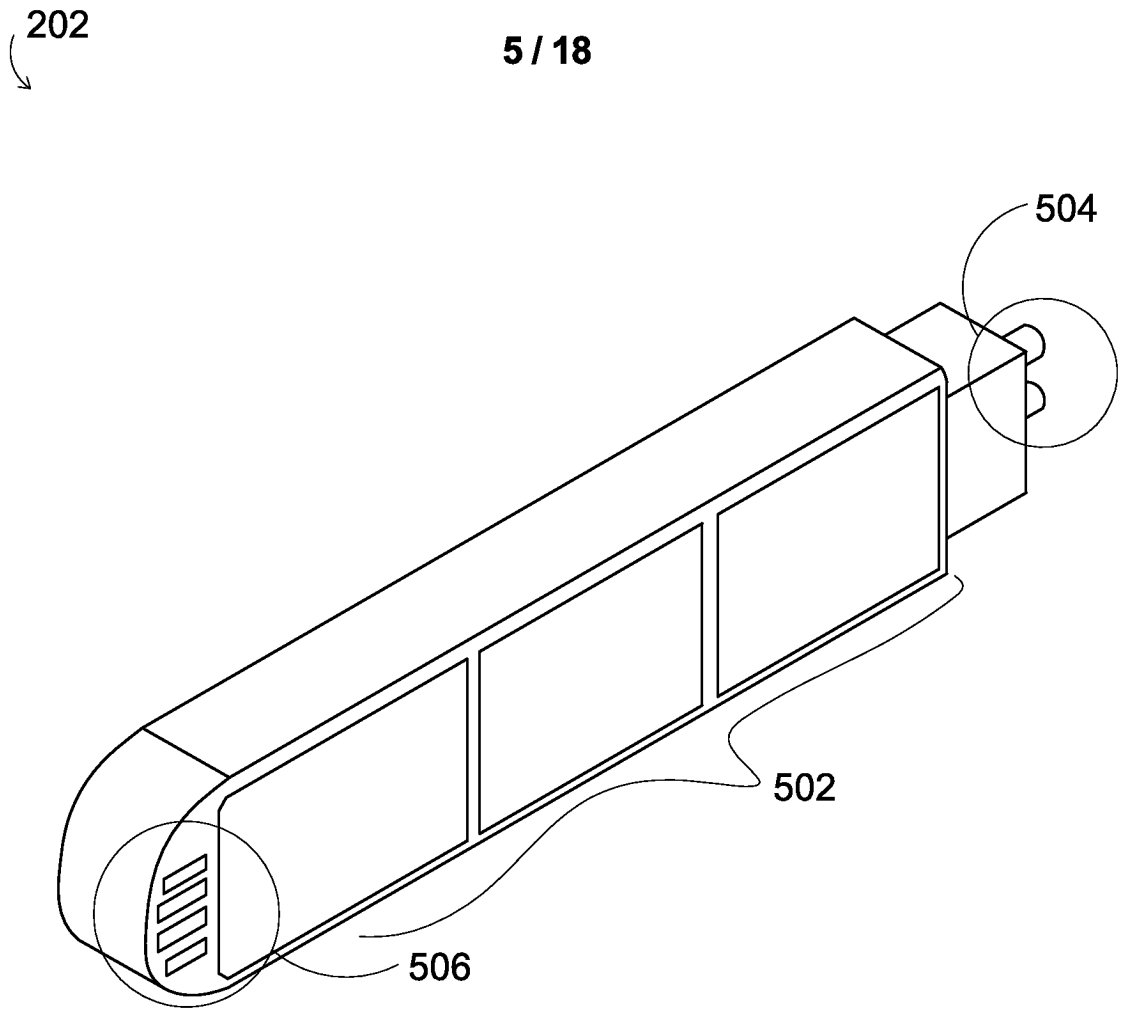

FIGURE 5

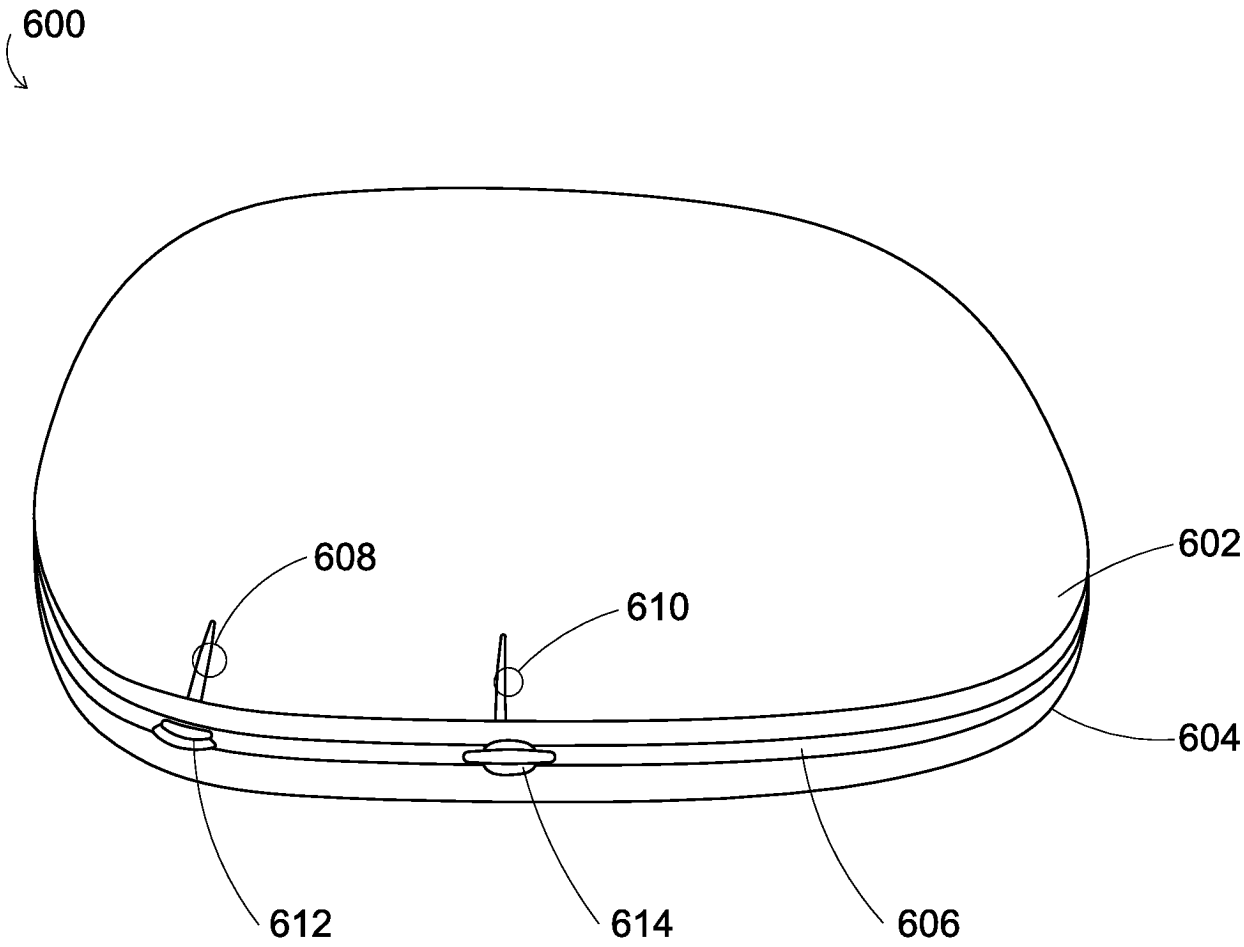

FIGURE 6

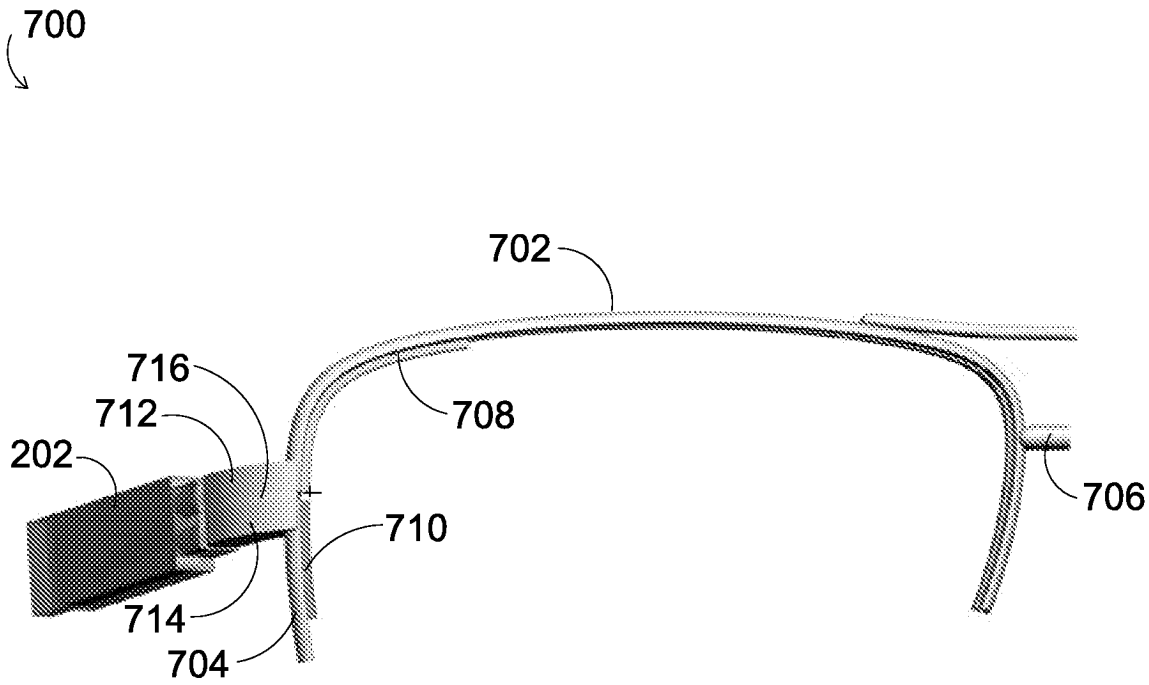

FIGURE 7

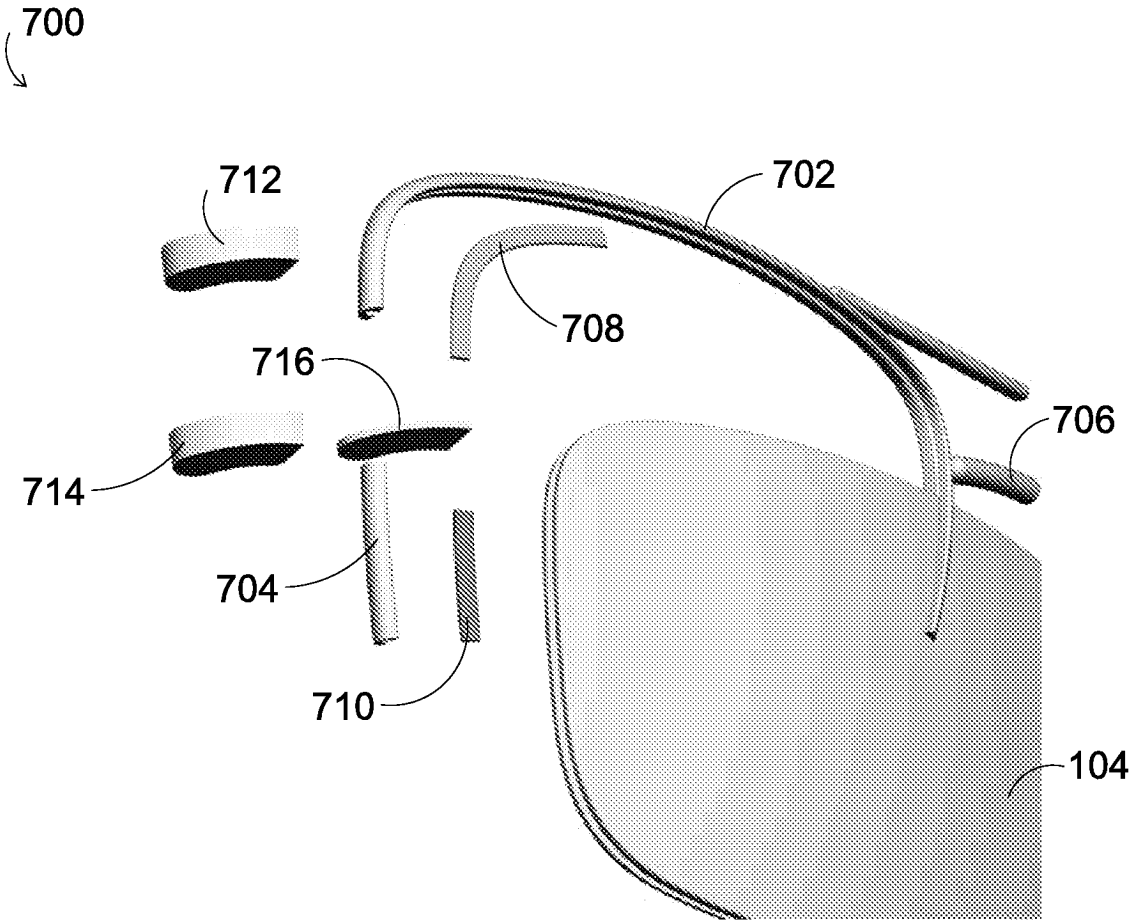

FIGURE 8

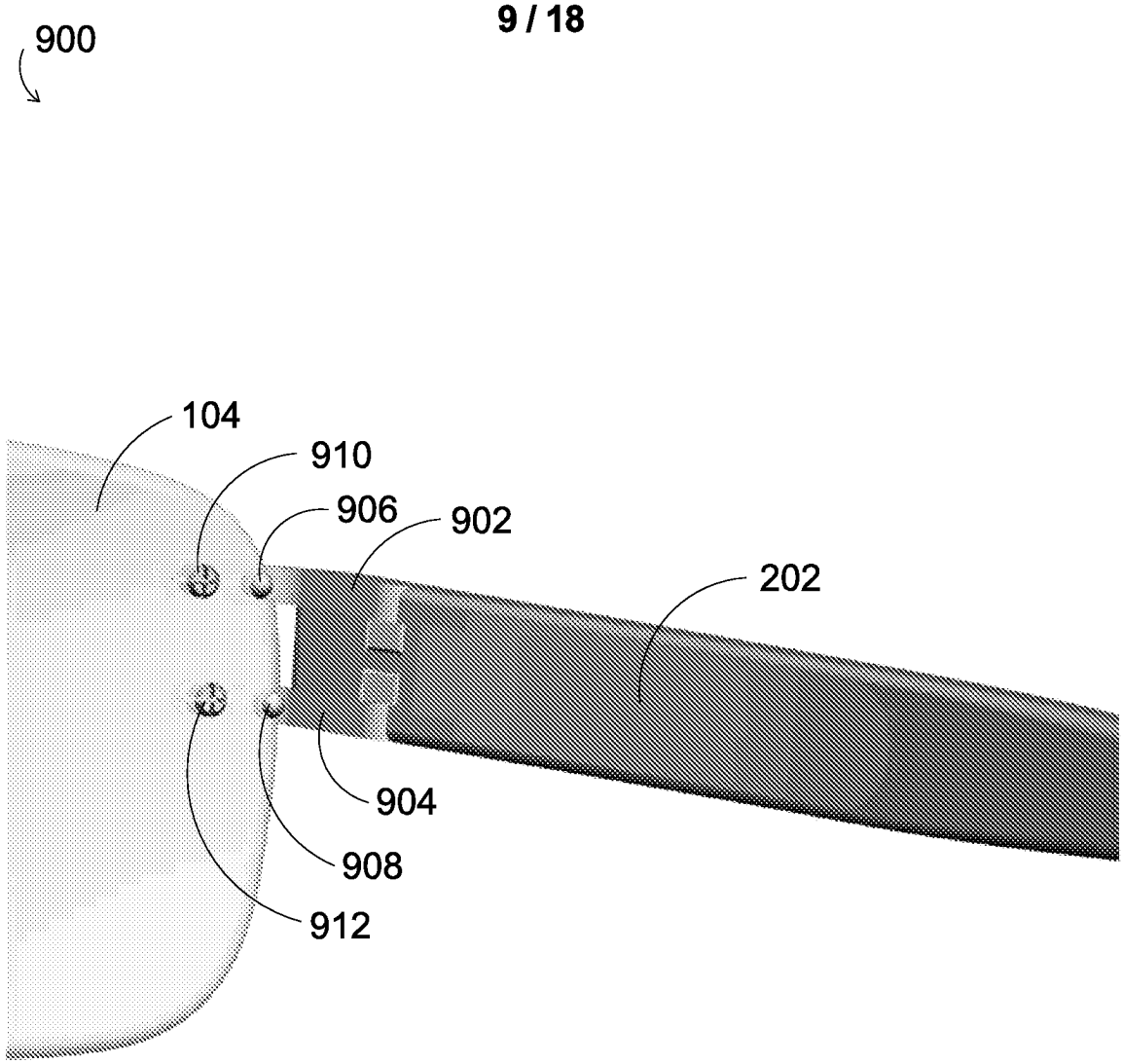

FIGURE 9

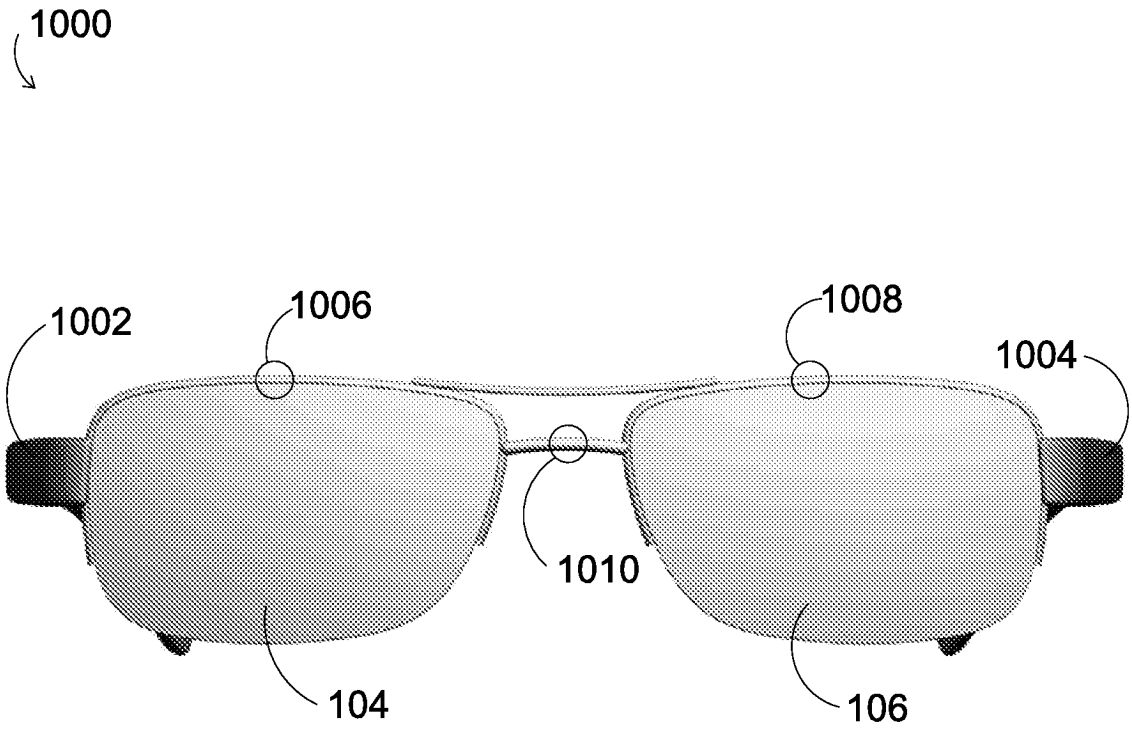

FIGURE 10

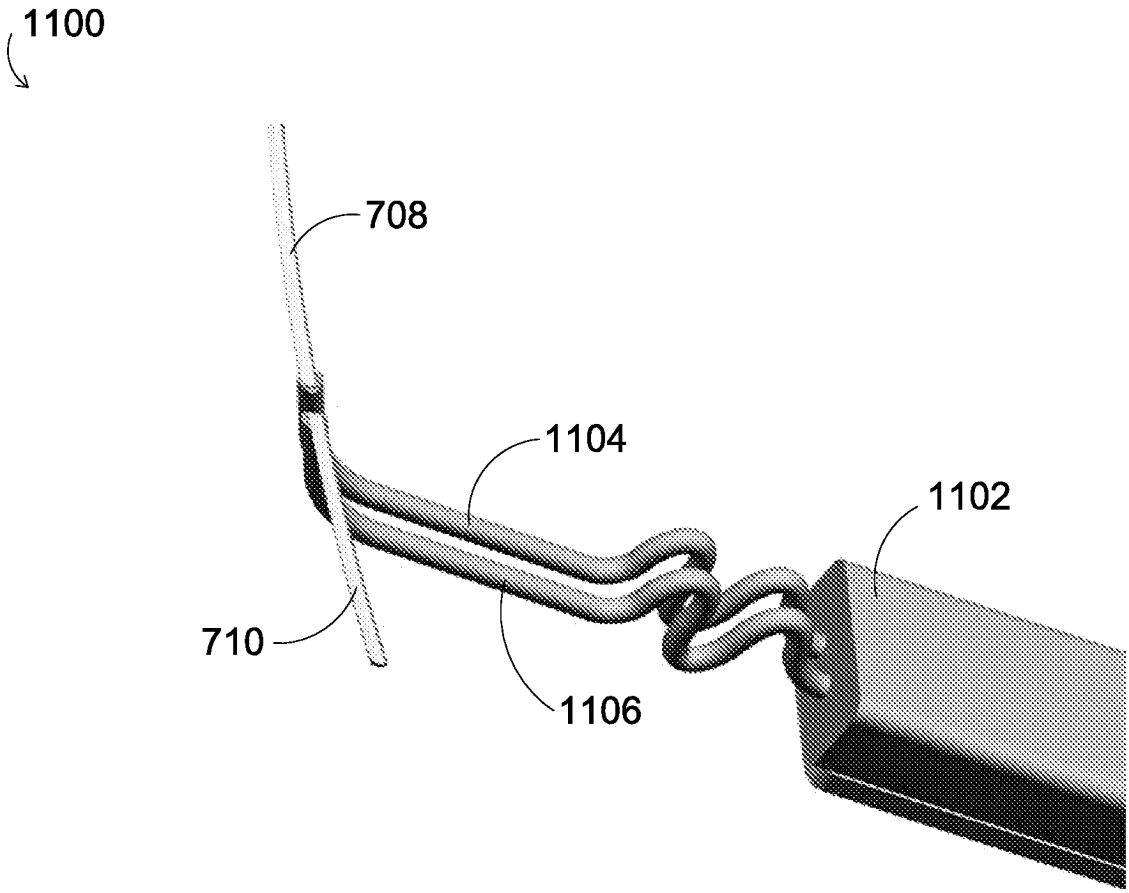

FIGURE 11

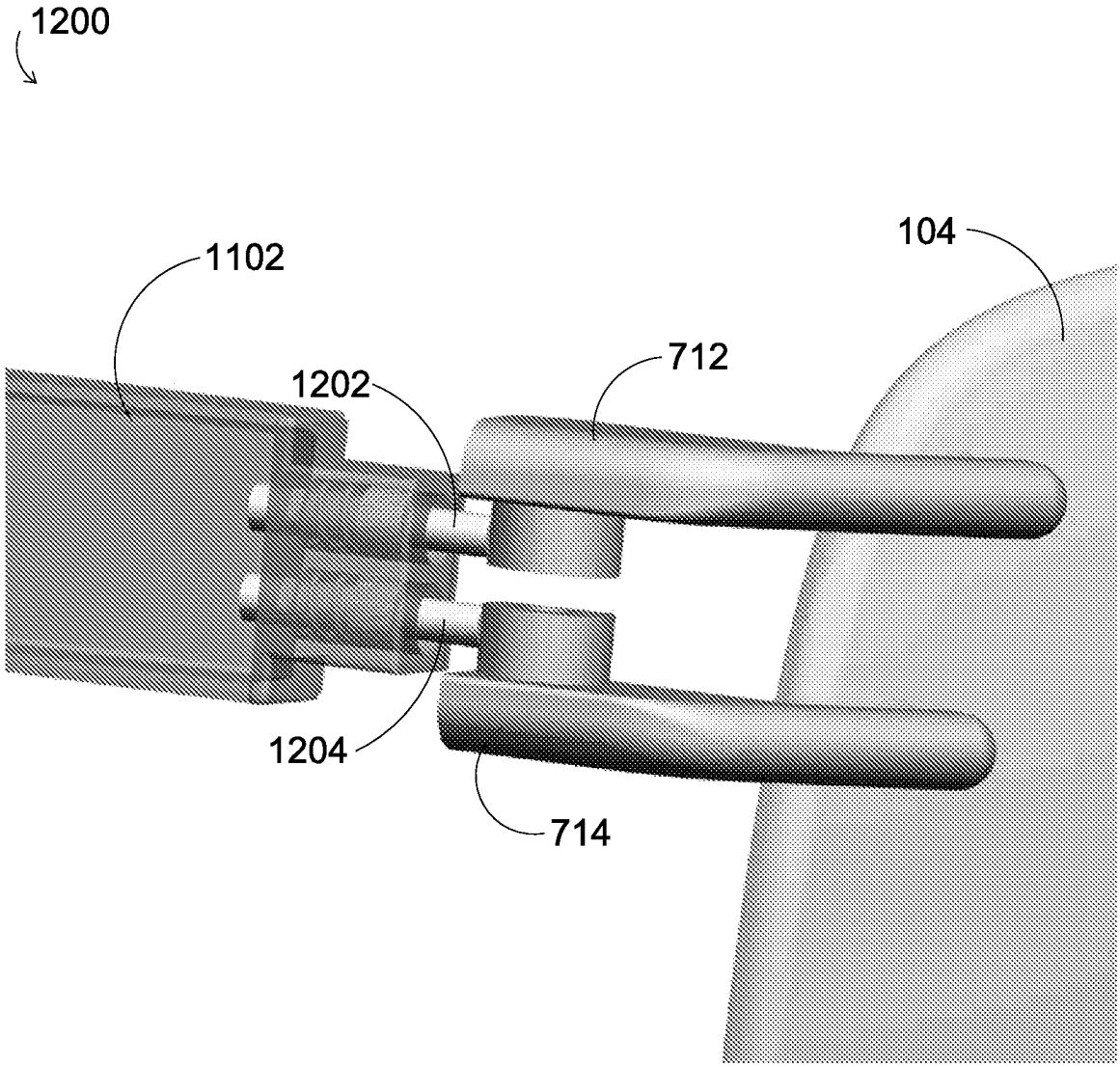

FIGURE 12

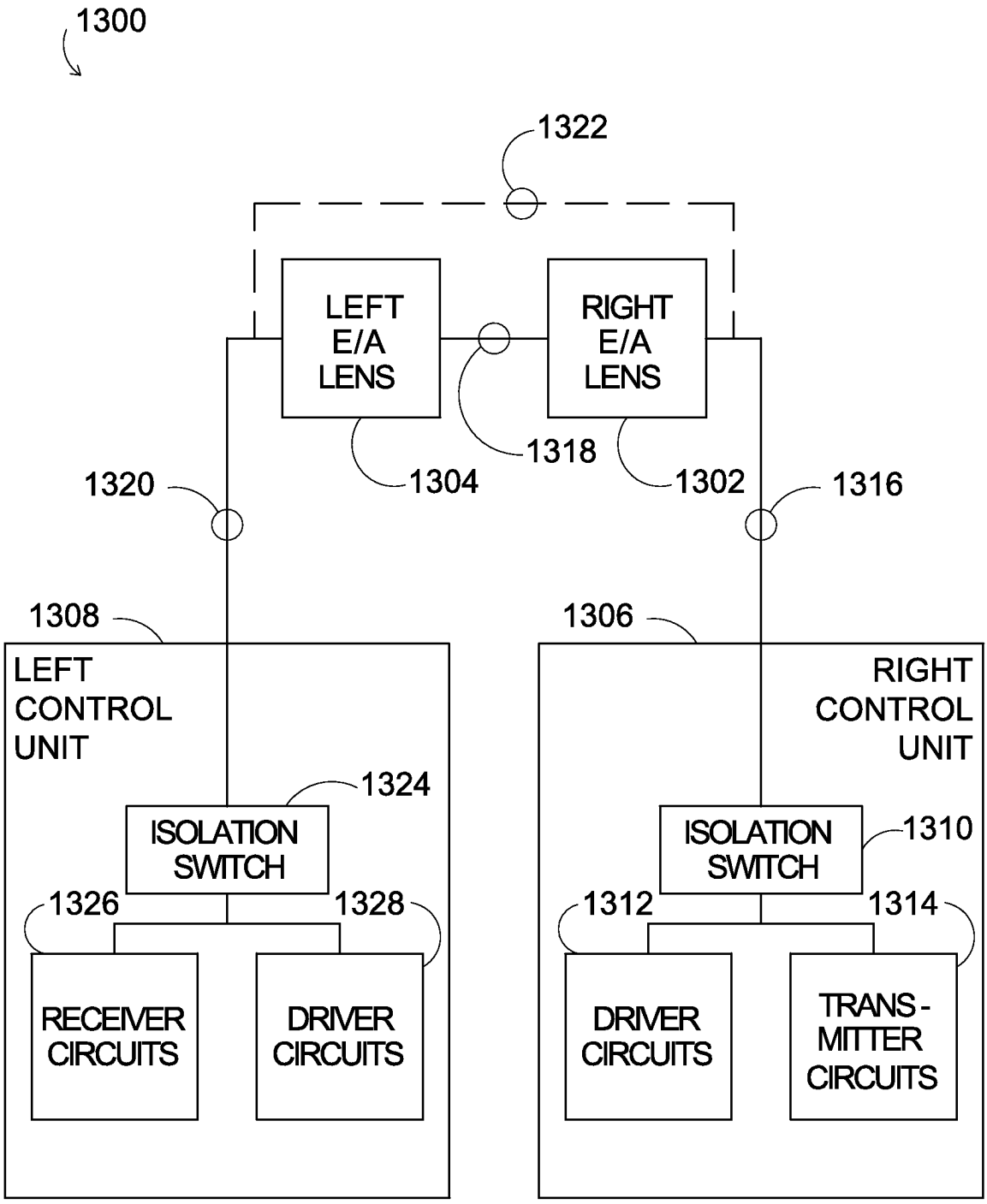
1300
1322
LEFT E/A LENS
RIGHT E/A LENS
1318
1304
1302
1320
1316
1308
1306
LEFT CONTROL UNIT
RIGHT CONTROL UNIT
1324
ISOLATION SWITCH
1310
ISOLATION SWITCH
1326
1328
1312
1314
RECEIVER CIRCUITS
DRIVER CIRCUITS
DRIVER CIRCUITS
TRANS-MITTER CIRCUITS

FIGURE 13

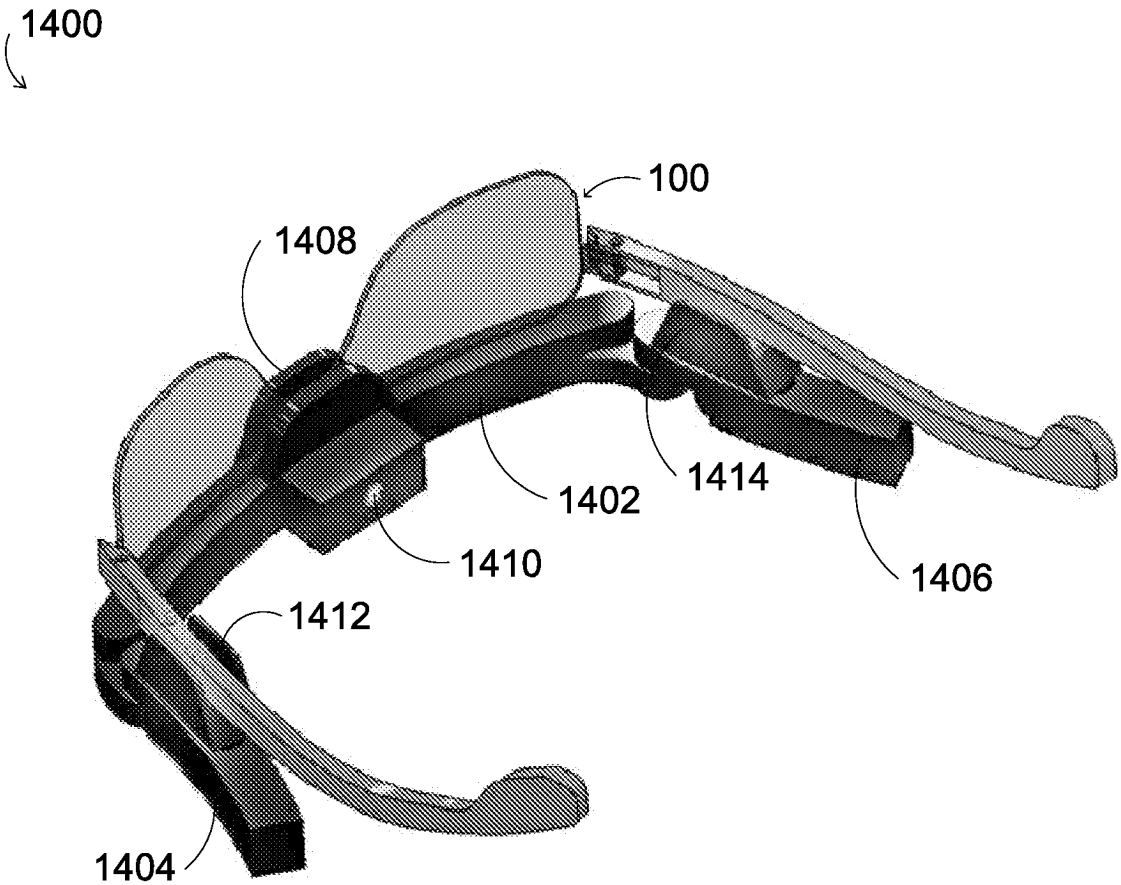

FIGURE 14

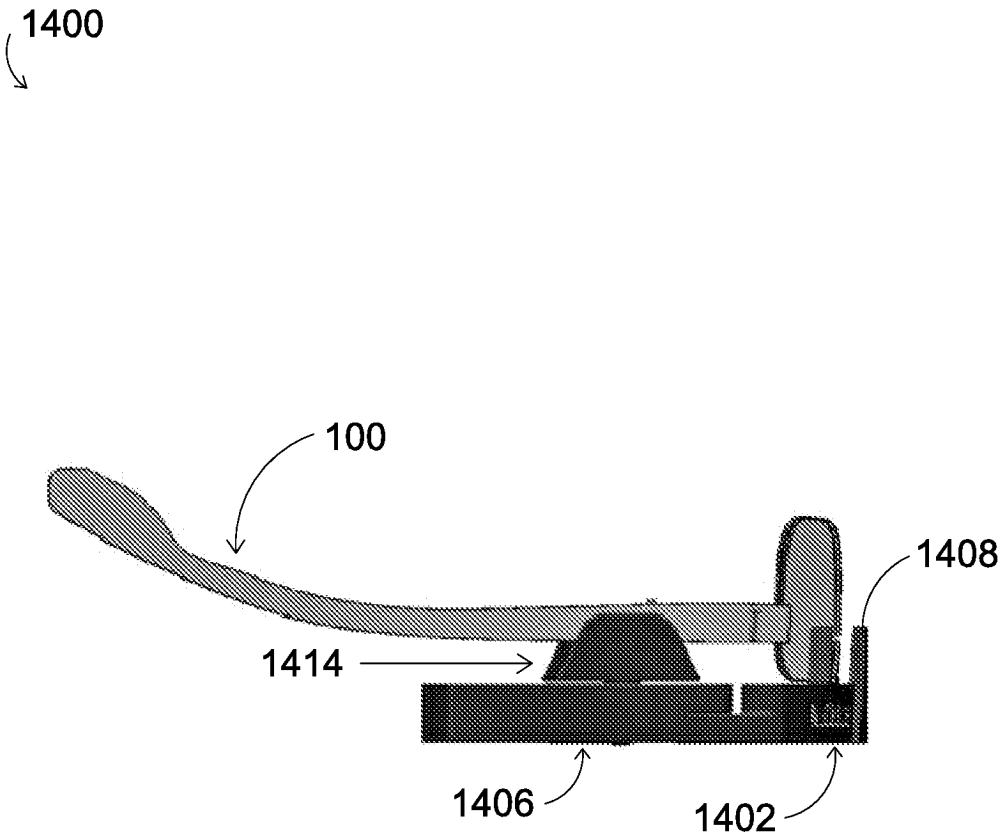

FIGURE 15

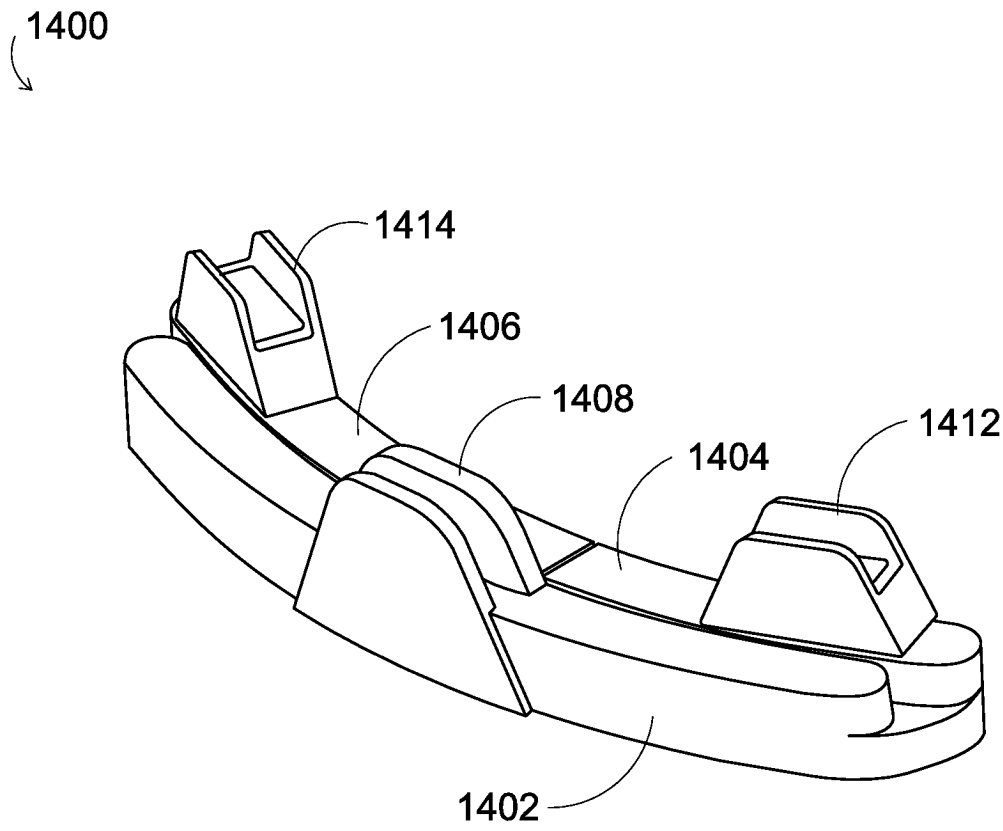

FIGURE 16

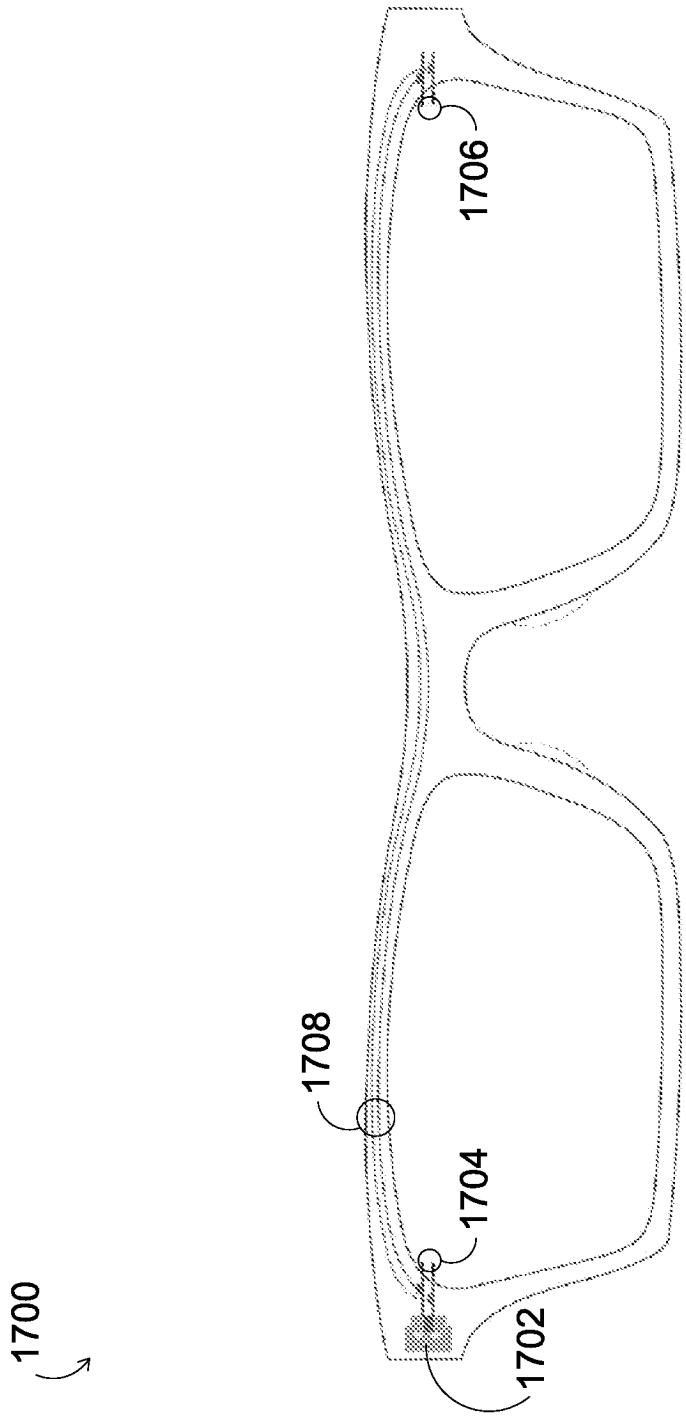

FIGURE 17

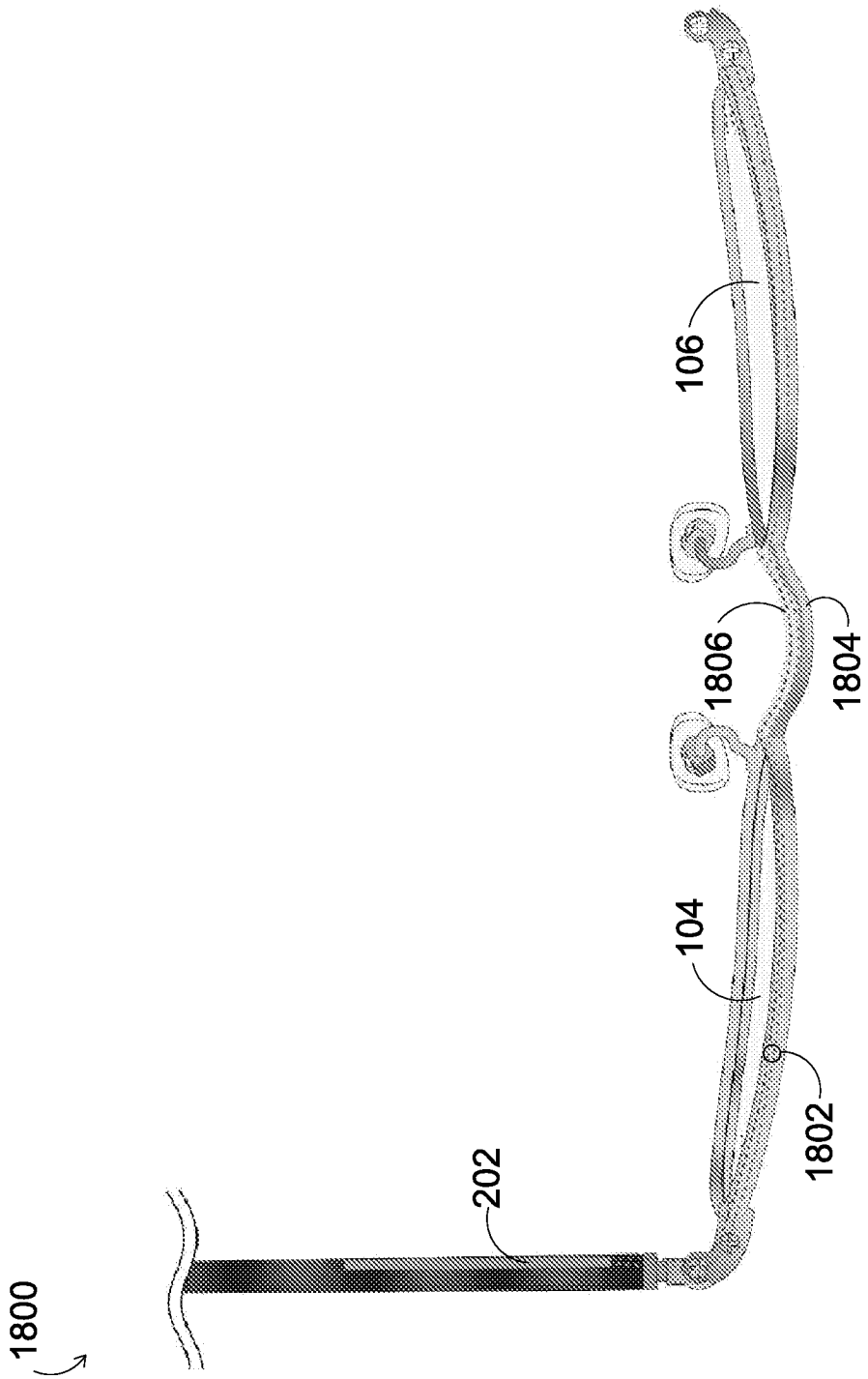

FIGURE 18