(12) INTERNATIONAL APPLICATION PUBLISHED UNDER THE PATENT COOPERATION TREATY (PCT)

(19) World Intellectual Property Organization
International Bureau

(43) International Publication Date
5 May 2011 (05.05.2011)

PCT

(10) International Publication Number
WO 2011/050943 A1

(51) International Patent Classification:
A24F 47/00 (2006.01)

(21) International Application Number:
PCT/EP2010/006534

(22) International Filing Date:
26 October 2010 (26.10.2010)

(25) Filing Language: English

(26) Publication Language: English

(30) Priority Data:
09252490.9 27 October 2009 (27.10.2009) EP

(71) Applicant *(for all designated States except US)*: **PHILIP MORRIS PRODUCTS S.A.** [CH/CH]; Quai Jean Renaud, 3, CH-2000 Neuchatel (CH).

(72) Inventors: **THORENS, Michel**; Les Combremonts 24, CH-1510 Moudon (CH). **FLICK, Jean-Marc**; Rue de Ia Poste 3, CH-1405 Pomy (CH). **COCHAND, Olivier Yves**; Faubourg 30, CH-2056 Dombresson (CH). **DUBIEF, Flavien**; Rue du Rocher 52, CH-2000 Neuchatel (CH).

(74) Agent: **BRADFORD, Victoria Sophie**; Reddie & Grose, 16 Theobalds Road, London, WC1X 8PL (GB).

(81) Designated States *(unless otherwise indicated, for every kind of national protection available)*: AE, AG, AL, AM, AO, AT, AU, AZ, BA, BB, BG, BH, BR, BW, BY, BZ, CA, CH, CL, CN, CO, CR, CU, CZ, DE, DK, DM, DO, DZ, EC, EE, EG, ES, FI, GB, GD, GE, GH, GM, GT, HN, HR, HU, ID, IL, IN, IS, JP, KE, KG, KM, KN, KP, KR, KZ, LA, LC, LK, LR, LS, LT, LU, LY, MA, MD, ME, MG, MK, MN, MW, MX, MY, MZ, NA, NG, NI, NO, NZ, OM, PE, PG, PH, PL, PT, RO, RS, RU, SC, SD, SE, SG, SK, SL, SM, ST, SV, SY, TH, TJ, TM, TN, TR, TT, TZ, UA, UG, US, UZ, VC, VN, ZA, ZM, ZW.

(84) Designated States *(unless otherwise indicated, for every kind of regional protection available)*: ARIPO (BW, GH, GM, KE, LR, LS, MW, MZ, NA, SD, SL, SZ, TZ, UG, ZM, ZW), Eurasian (AM, AZ, BY, KG, KZ, MD, RU, TJ, TM), European (AL, AT, BE, BG, CH, CY, CZ, DE, DK, EE, ES, FI, FR, GB, GR, HR, HU, IE, IS, IT, LT, LU, LV, MC, MK, MT, NL, NO, PL, PT, RO, RS, SE, SI, SK, SM, TR), OAPI (BF, BJ, CF, CG, CI, CM, GA, GN, GQ, GW, ML, MR, NE, SN, TD, TG).

Published:

— *with international search report (Art. 21(3))*

— *before the expiration of the time limit for amending the claims and to be republished in the event of receipt of amendments (Rule 48.2(h))*

(54) Title: A SMOKING SYSTEM HAVING A LIQUID STORAGE PORTION AND IMPROVED AIRFLOW CHARACTERISTICS

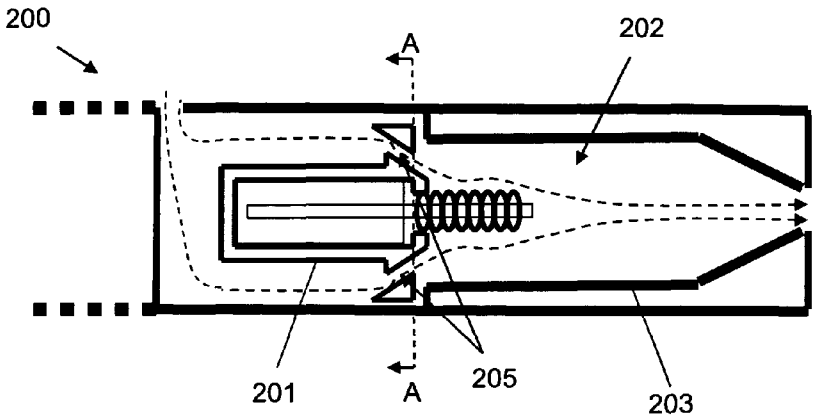

Fig. 2a

(57) Abstract: There is provided a smoking system comprising a capillary wick for holding liquid, at least one air inlet, at least one air outlet and a chamber between the air inlet and air outlet. The air inlet, the air outlet and the chamber are arranged so as to define an air flow route from the air inlet to the air outlet via the capillary wick so as to convey aerosol formed from the liquid to the air outlet. The smoking system further includes at least one guide for channeling the air flow in the air flow route, so as to control particle size in the aerosol. The smoking system may further comprise at least one heater for heating the liquid in at least a portion of the capillary wick to form the aerosol.

WO 2011/050943 A1