Fig. 1

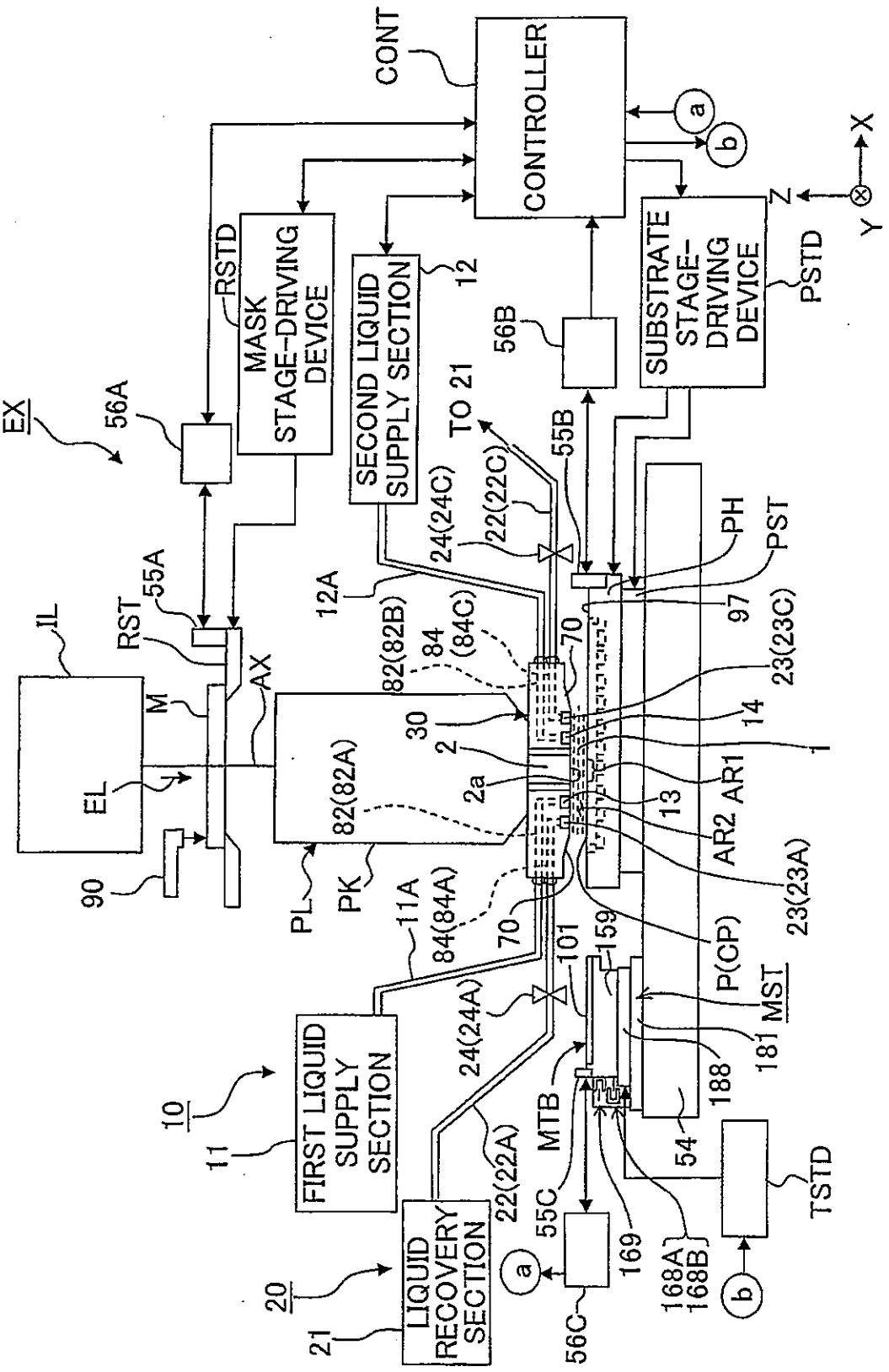
CONT
CONTROLLER
MASK STAGE-DRIVING DEVICE
RSTD
SECOND LIQUID SUPPLY SECTION
12
SUBSTRATE STAGE-DRIVING DEVICE
PSTD
EX
56A
56B
TO 21
55B
24(24C)
22(22C)
PH
PST
97
12A
IL
RST
55A
M
AX
82(82B)
84
(84C)
70
23(23C)
30
14
2
1
EL
82(82A)
2a
13
AR1
AR2
23(23A)
90
PL
PK
11A
84(84A)
70
101
159
P(CP)
MST
181
188
24(24A)
10
11
FIRST LIQUID SUPPLY SECTION
MTB
22(22A)
54
TSTD
55C
169
168A
168B
20
21
LIQUID RECOVERY SECTION
56C
a
b
X
Y
Z

Fig. 2

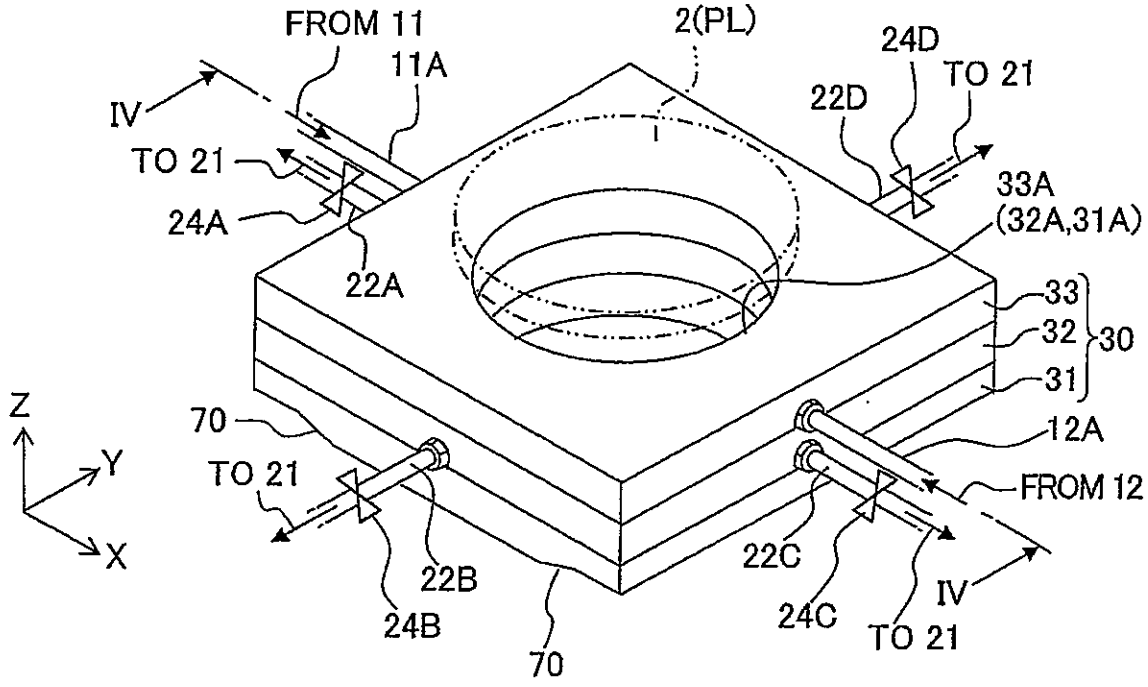
FROM 11
11A
2(PL)
24D
TO 21
IV
22D
TO 21
33A
(32A,31A)
24A
22A
33
32
30
31
Z
70
12A
Y
TO 21
FROM 12
X
22B
22C
24B
24C
IV
70
TO 21

Fig. 3

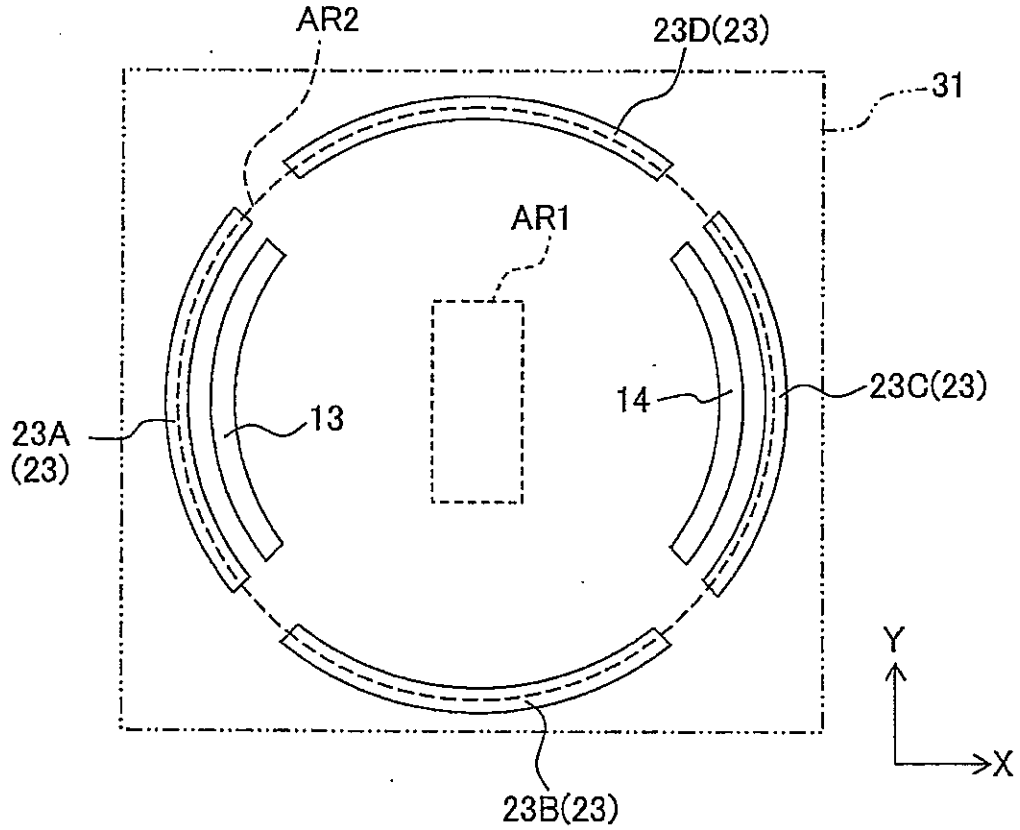
AR2
23D(23)
31
AR1
23A
(23)
13
14
23C(23)
Y
X
23B(23)

Fig. 4

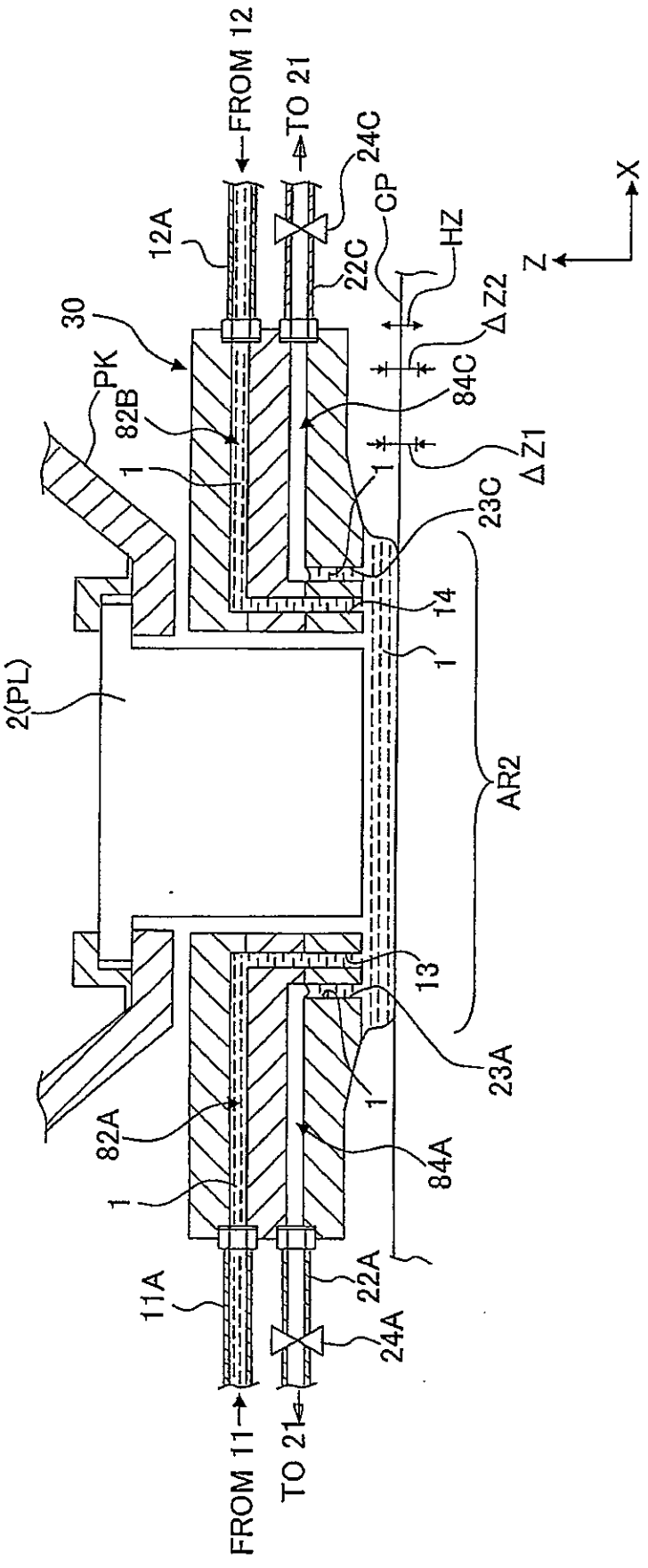
FROM 12
TO 21
24C
CP
HZ
12A
22C
30
PK
82B
84C
ΔZ2
ΔZ1
23C
14
2(PL)
AR2
13
23A
82A
84A
22A
11A
24A
FROM 11
TO 21
X
Z

Fig. 5

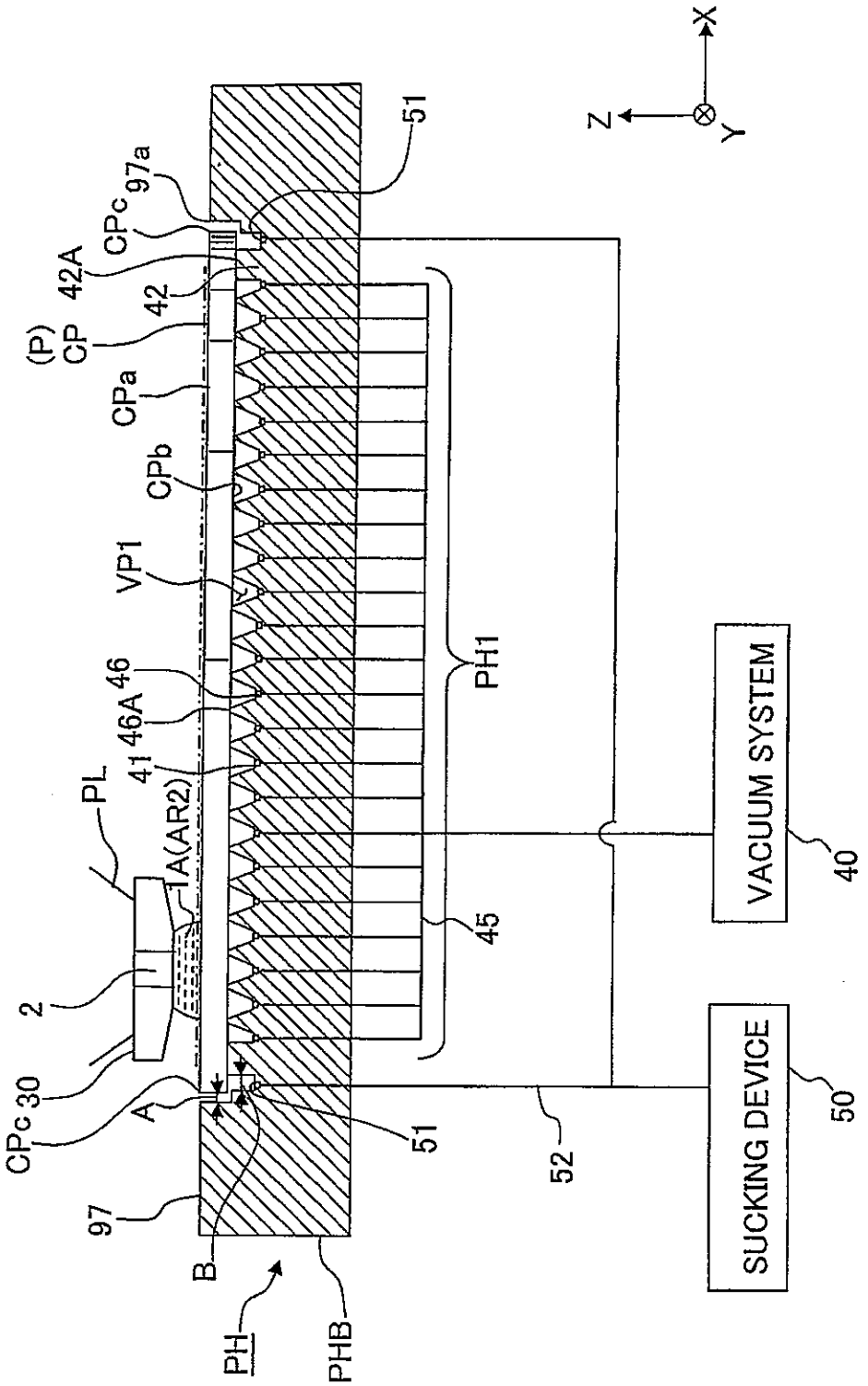
Z
X
Y
51
97a
CPc
42A
42
(P)
CP
CPa
CPb
VP1
46
46A
41
PL
1A(AR2)
2
30
CPc
A
B
97
PH
PHB
51
52
45
PH1
VACUUM SYSTEM
40
SUCKING DEVICE
50

Fig. 6

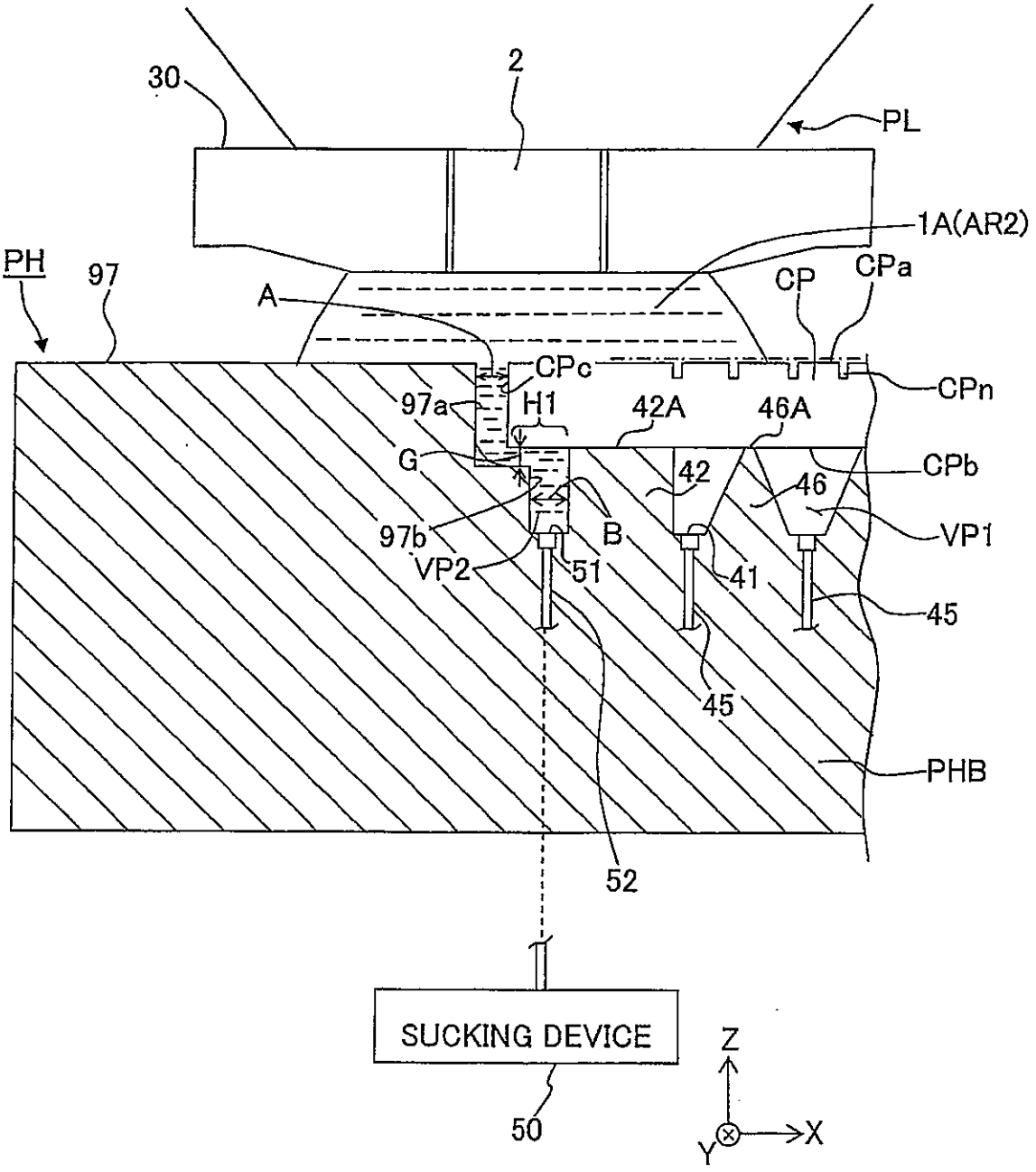
30
2
PL
1A(AR2)
PH
97
A
CP
CPa
CPc
CPn
97a
H1
42A
46A
G
42
46
CPb
97b
B
VP1
VP2
51
41
45
45
PHB
52
SUCKING DEVICE
50
Z
Y
X

Fig. 7

(A)

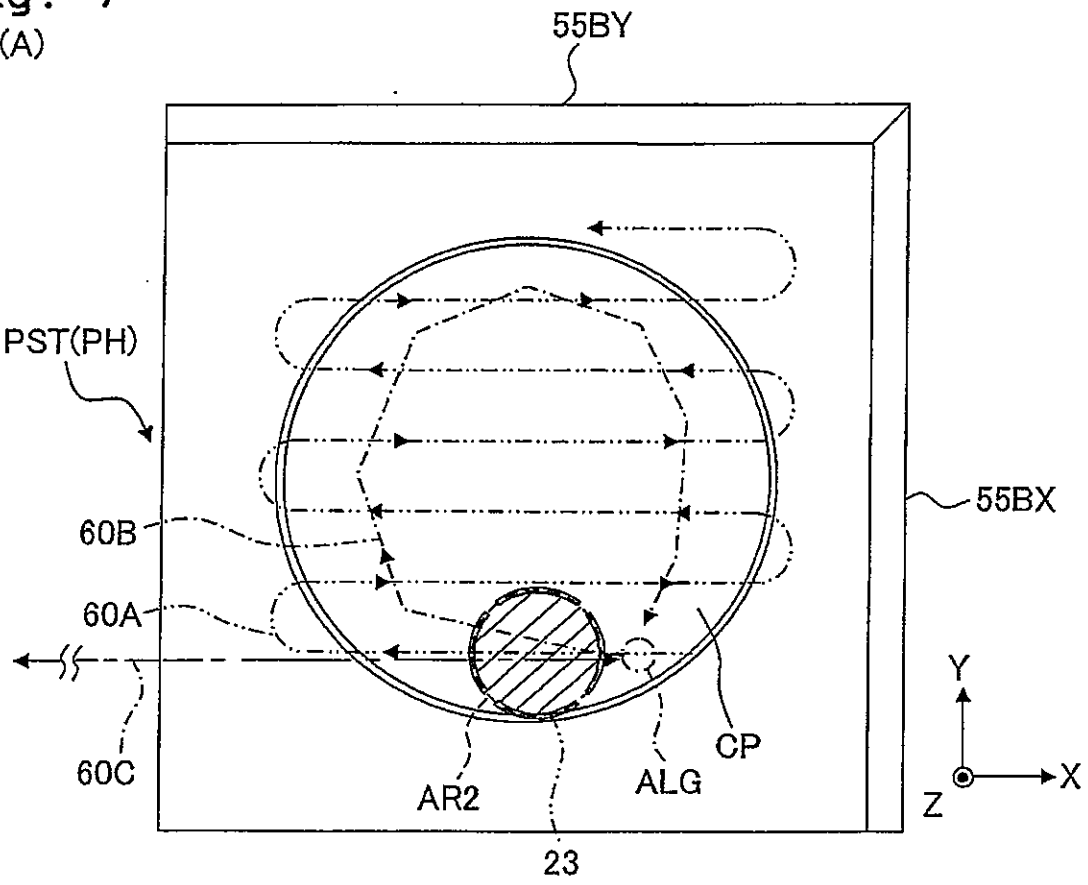
55BY
PST(PH)
55BX
60B
60A
60C
AR2
23
ALG
CP
Y
X
Z

(B)

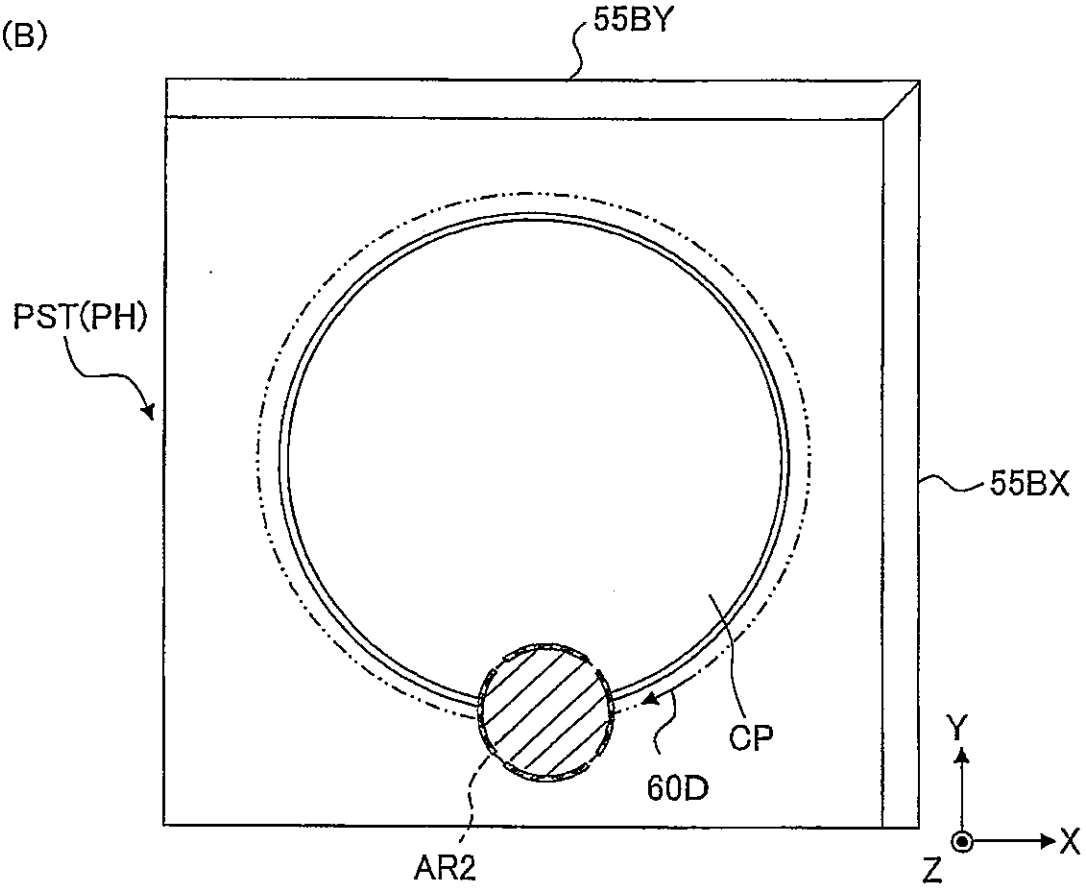
55BY
PST(PH)
55BX
CP
60D
AR2
Y
X
Z

Fig. 8

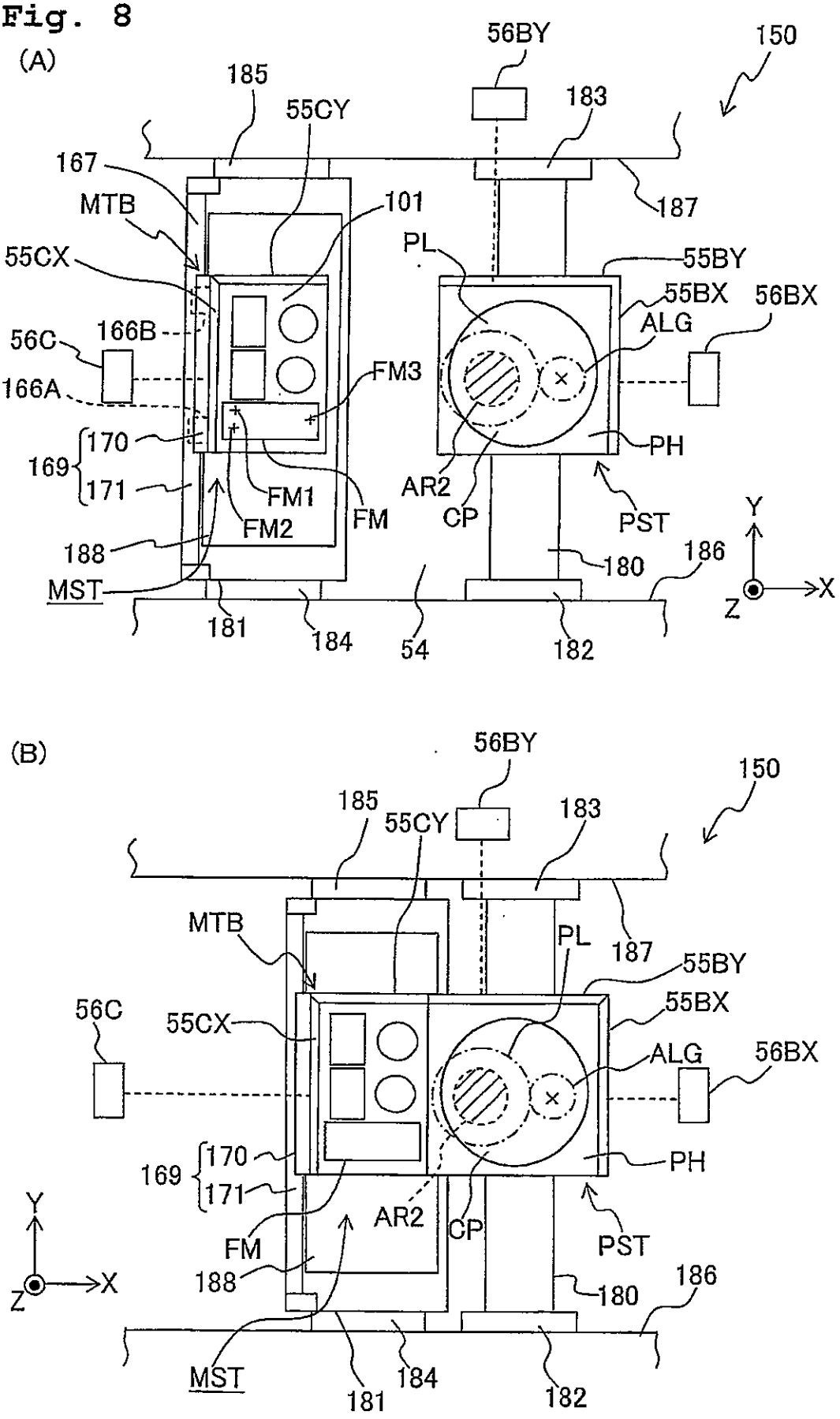
(A)
56BY
150
185
55CY
183
167
187
MTB
101
PL
55BY
55CX
55BX
56BX
ALG
56C
166B
166A
FM3
170
169
171
PH
AR2
FM1
FM2
FM
CP
PST
188
180
186
MST
181
184
54
182
Y
X
Z
(B)
56BY
150
185
55CY
183
MTB
PL
187
55BY
55BX
56C
55CX
ALG
56BX
170
169
171
PH
AR2
CP
FM
PST
188
180
186
MST
181
184
182
Y
X
Z

Fig. 9

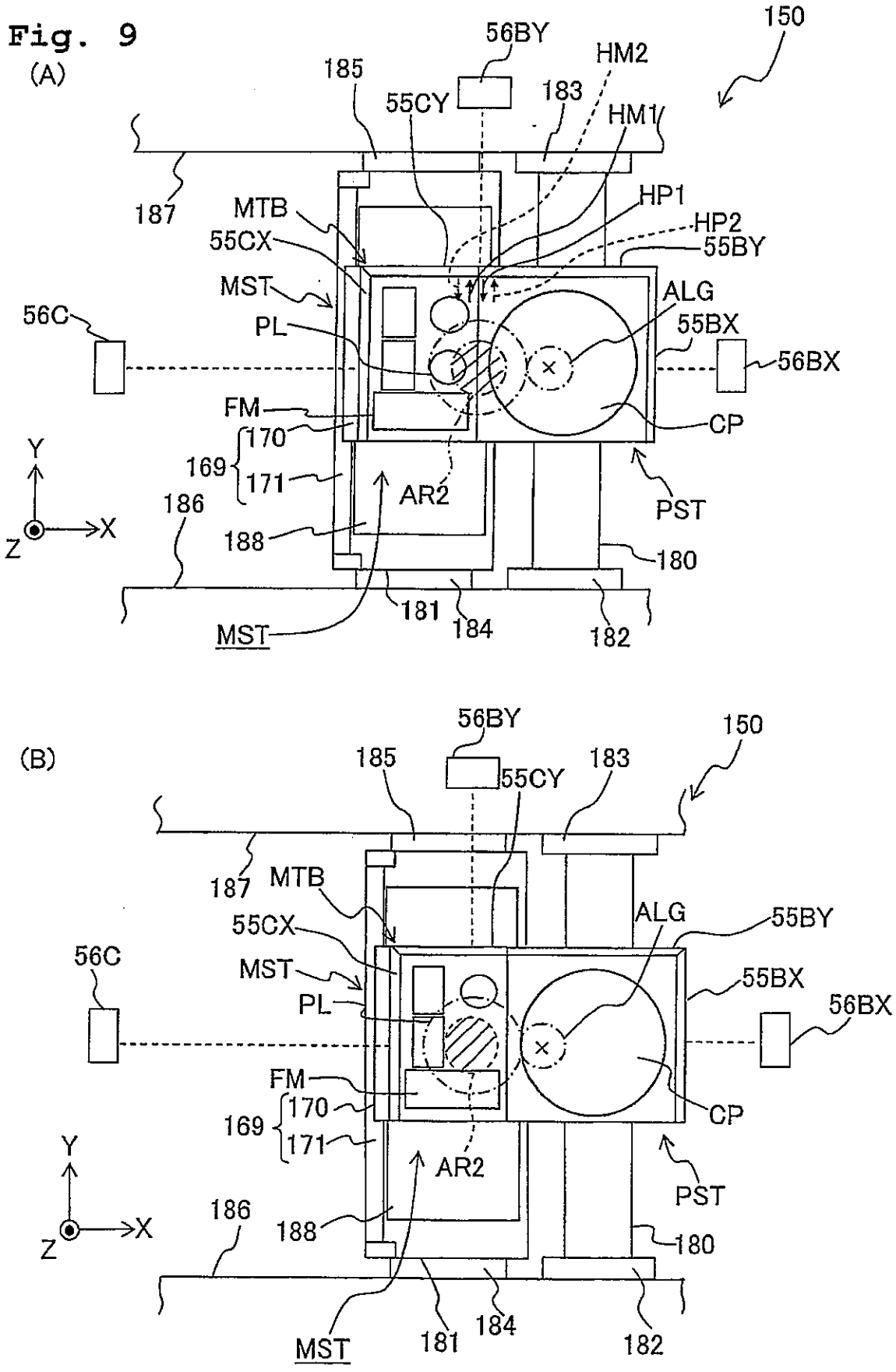
(A)
150
56BY
HM2
185
55CY
183
HM1
187
MTB
HP1
HP2
55CX
55BY
MST
ALG
56C
PL
55BX
56BX
FM
CP
170
169
171
AR2
PST
Y
X
Z
186
188
180
181
184
182
MST
(B)
56BY
150
185
55CY
183
187
MTB
55CX
ALG
55BY
56C
MST
55BX
PL
56BX
FM
CP
170
169
171
AR2
PST
Y
X
Z
186
188
180
MST
181
184
182

Fig. 10

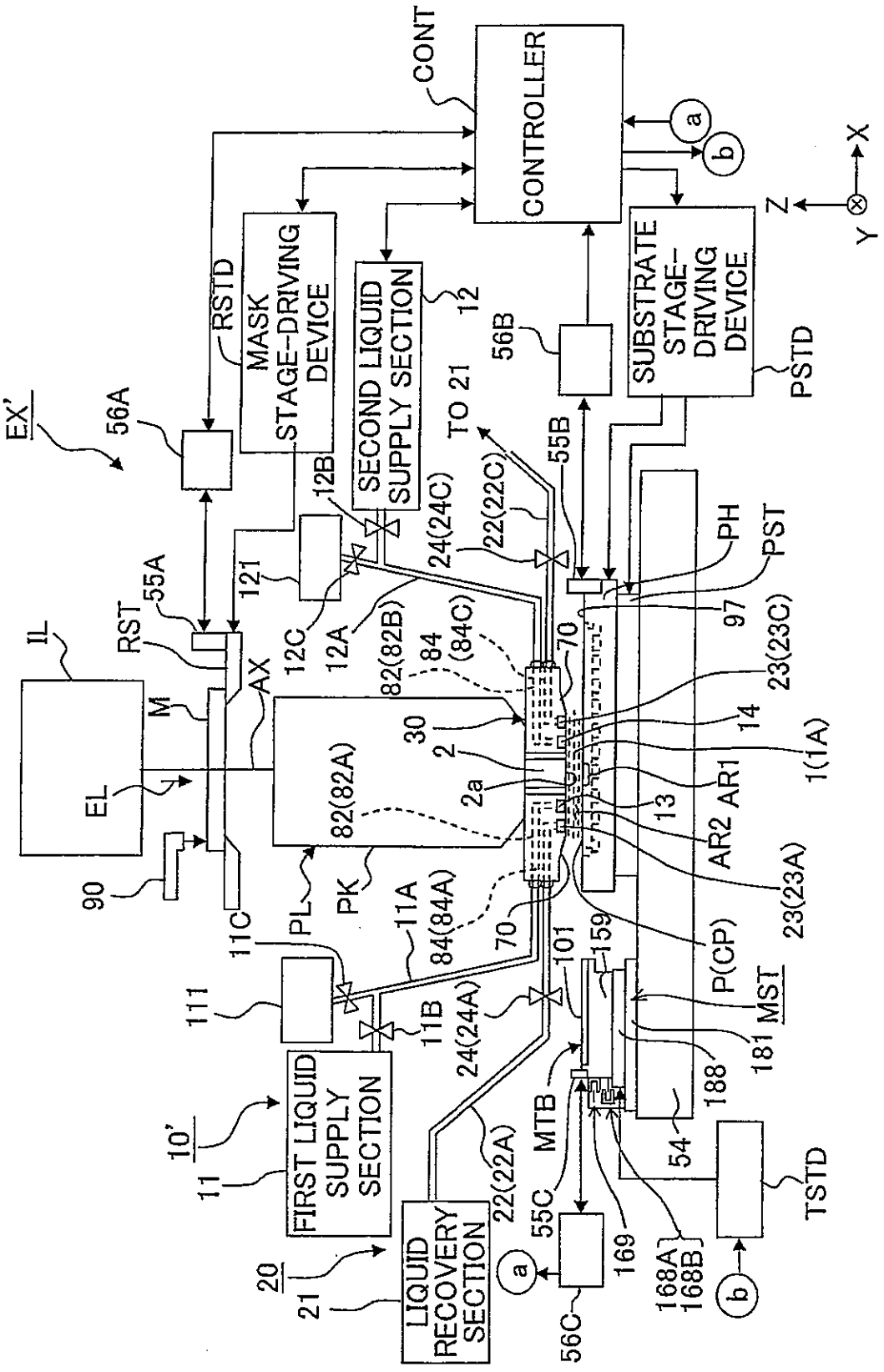
CONTROLLER
CONT
MASK STAGE-DRIVING DEVICE
RSTD
SECOND LIQUID SUPPLY SECTION
12
SUBSTRATE STAGE-DRIVING DEVICE
PSTD
EX'
56A
56B
TO 21
55B
22(22C)
24(24C)
12B
121
12C
12A
55A
RST
IL
M
AX
EL
90
82(82B)
84
(84C)
70
30
2
2a
82(82A)
PL
PK
11A
84(84A)
11C
111
11B
24(24A)
101
159
P(CP)
MST
181
188
54
TSTD
168A
168B
169
55C
MTB
56C
22(22A)
10'
11
FIRST LIQUID SUPPLY SECTION
20
21
LIQUID RECOVERY SECTION
PH
PST
97
23(23C)
14
1(1A)
AR1
13
AR2
23(23A)
a
b
X
Y
Z

Fig. 11

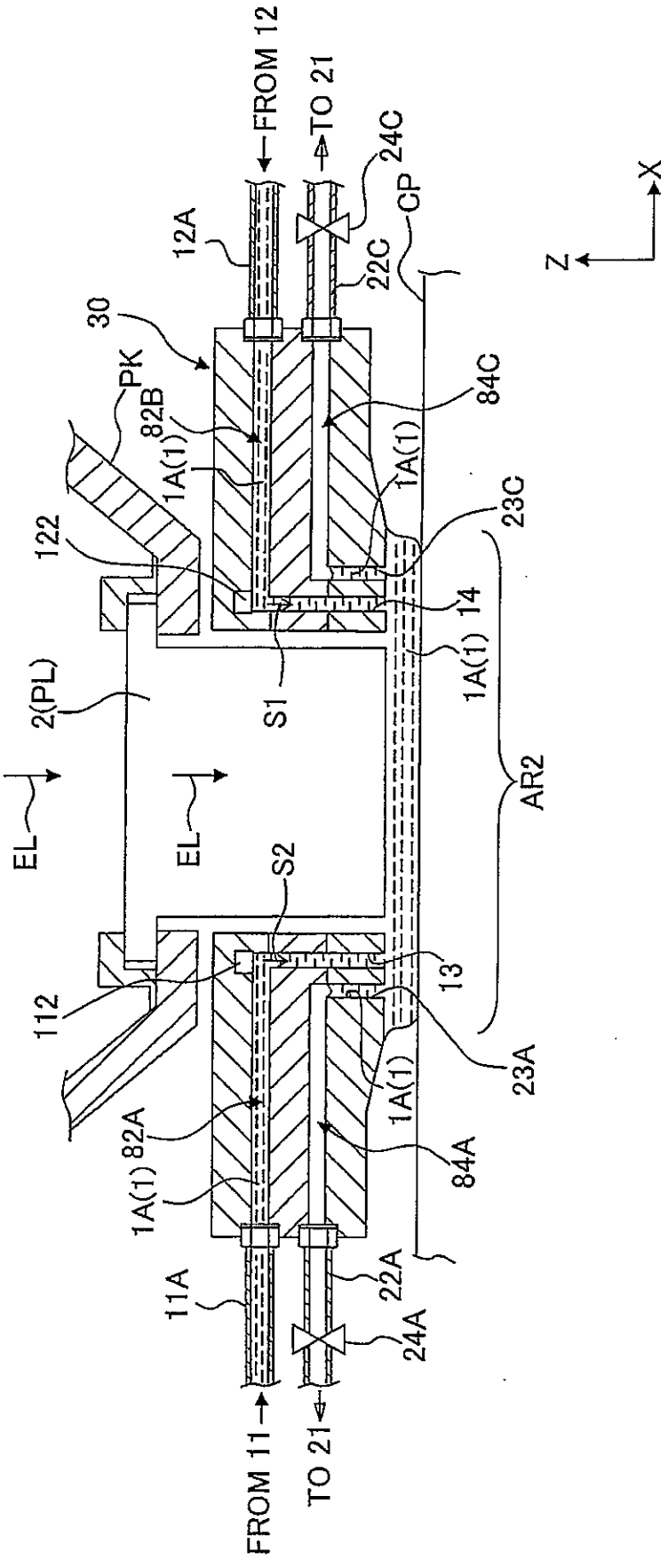
FROM 12
TO 21
12A
24C
22C
CP
30
PK
82B
1A(1)
84C
122
23C
14
2(PL)
S1
EL
EL
S2
AR2
112
13
23A
82A
84A
11A
22A
24A
FROM 11
TO 21
Z
X

Fig. 12

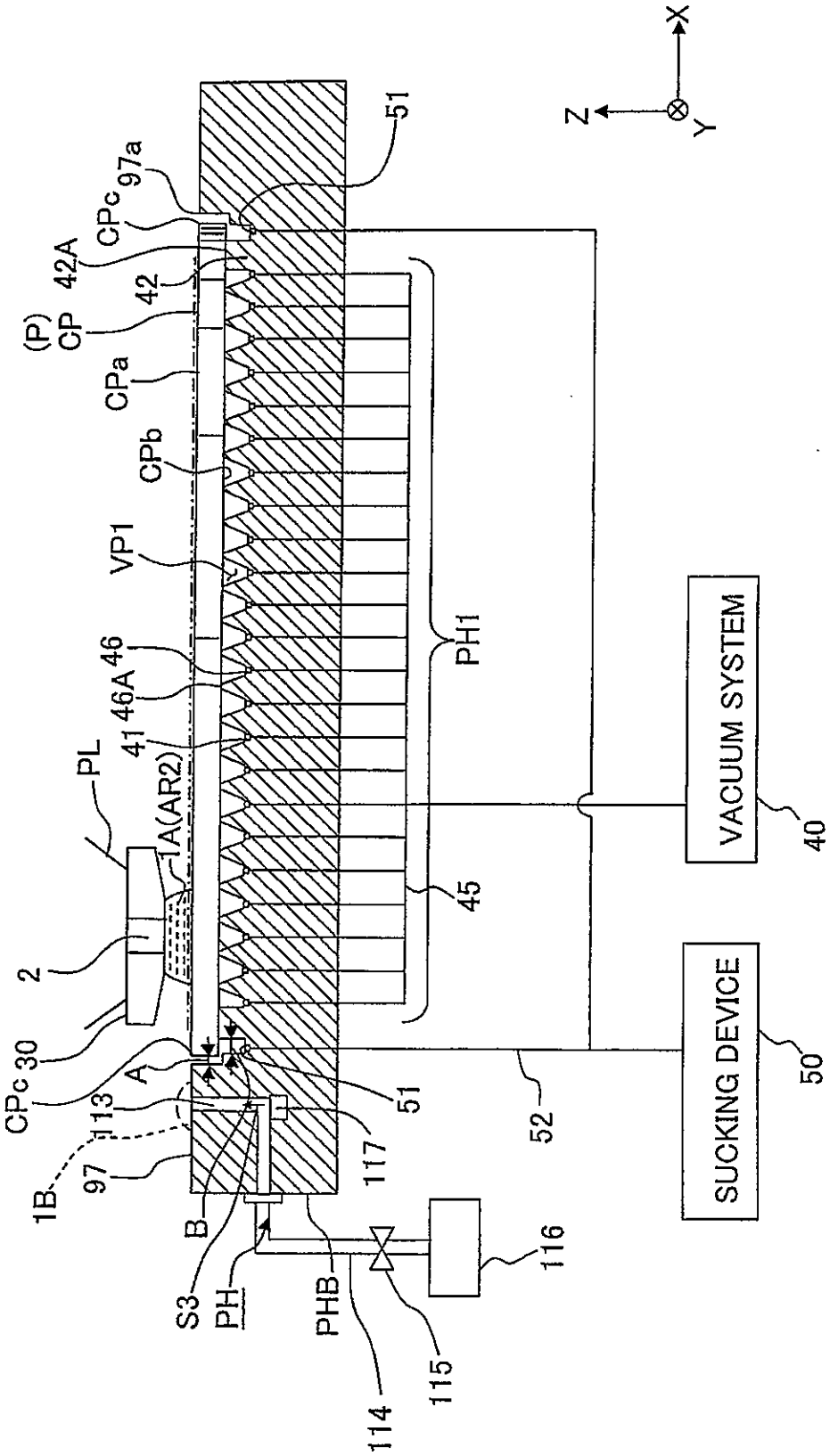
Z
X
Y
51
97a
CPc
42A
42
(P)
CP
CPa
CPb
VP1
46
46A
41
PL
1A(AR2)
2
30
CPc
A
113
1B
97
B
S3
PH
PHB
114
115
116
117
51
52
PH1
45
VACUUM SYSTEM
40
SUCKING DEVICE
50

Fig. 13

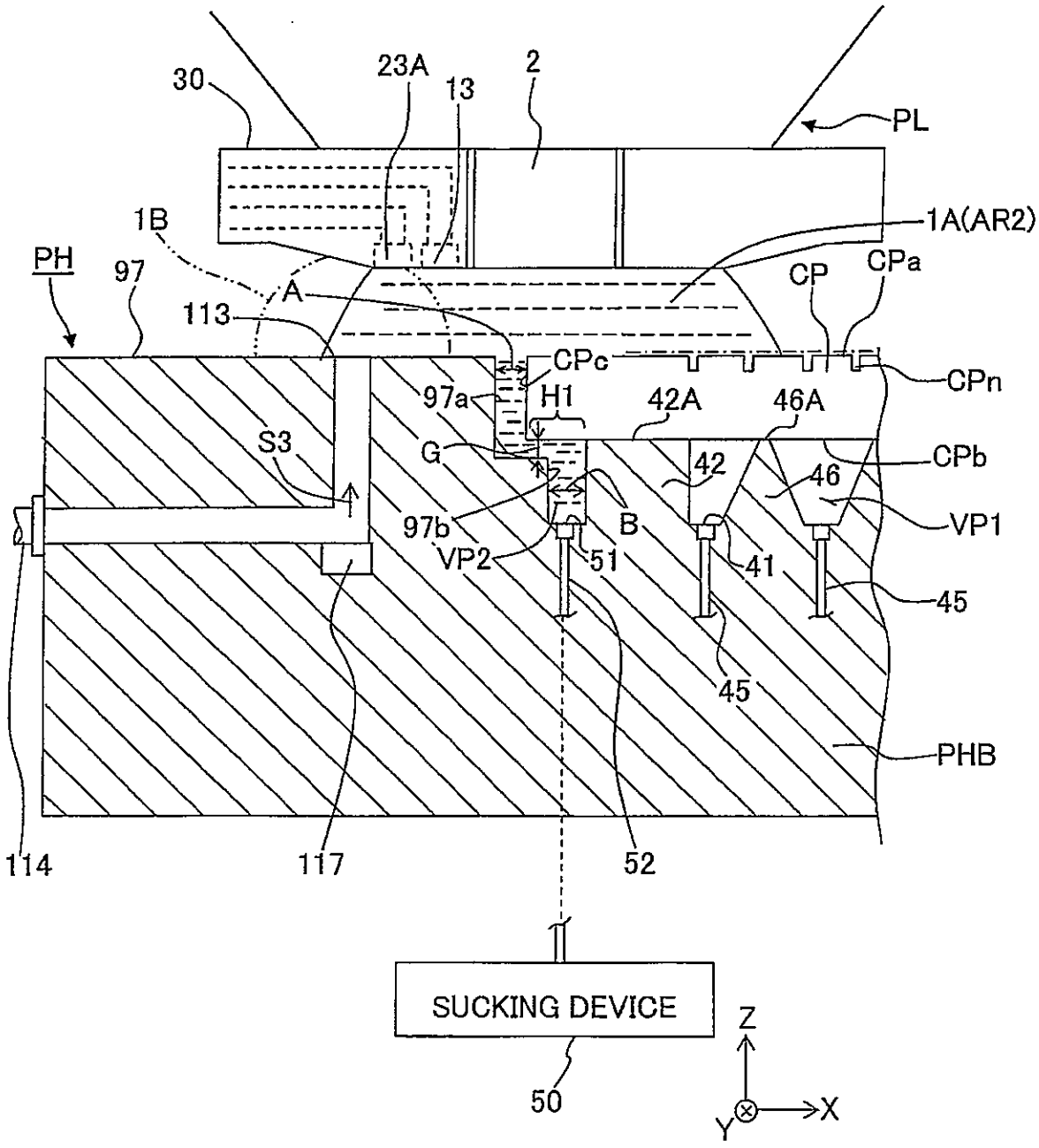
30
23A
13
2
PL
1B
1A(AR2)
PH
97
A
113
CP
CPa
CPc
CPn
97a
H1
42A
46A
S3
G
42
46
CPb
97b
B
VP1
VP2
51
41
45
45
PHB
114
117
52
SUCKING DEVICE
50
Z
X
Y

Fig. 14

(A)

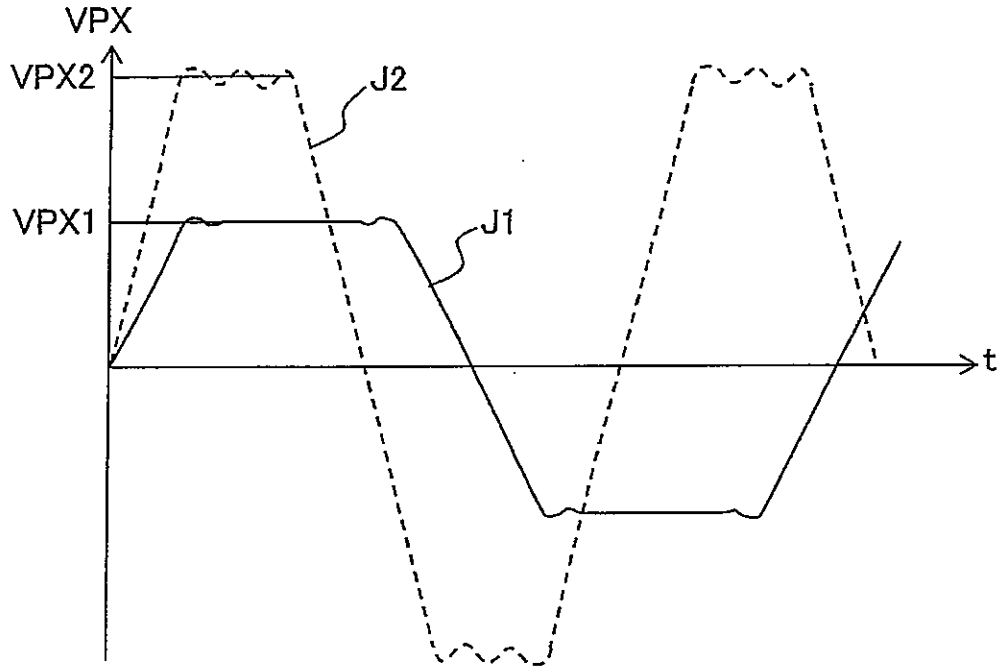

(B)

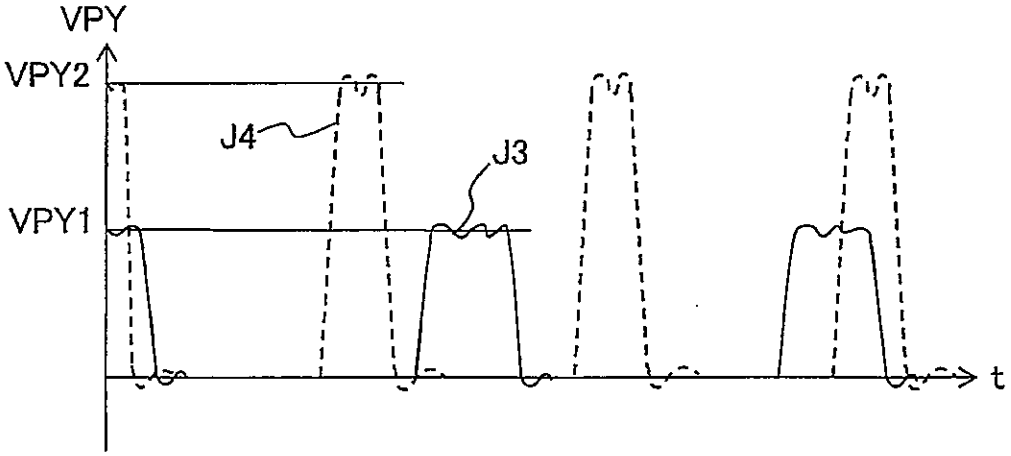

Fig. 15

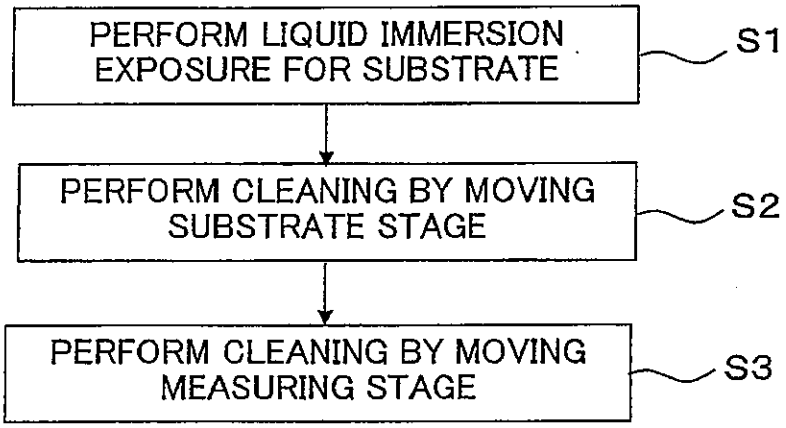
PERFORM LIQUID IMMERSION EXPOSURE FOR SUBSTRATE
S1
PERFORM CLEANING BY MOVING SUBSTRATE STAGE
S2
PERFORM CLEANING BY MOVING MEASURING STAGE
S3

Fig. 16

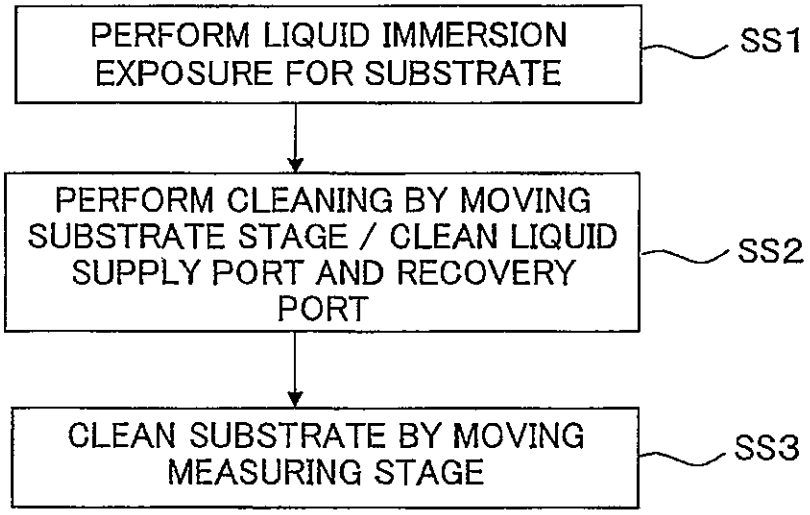
PERFORM LIQUID IMMERSION EXPOSURE FOR SUBSTRATE
SS1
PERFORM CLEANING BY MOVING SUBSTRATE STAGE / CLEAN LIQUID SUPPLY PORT AND RECOVERY PORT
SS2
CLEAN SUBSTRATE BY MOVING MEASURING STAGE
SS3

Fig. 17

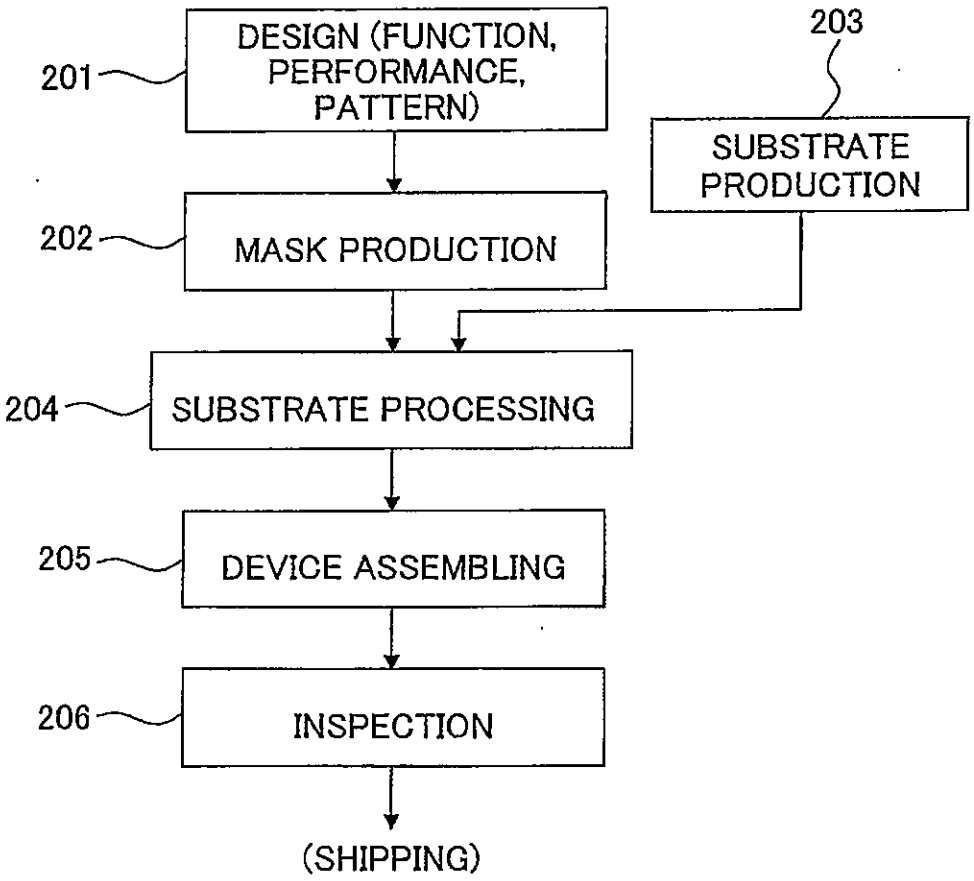
DESIGN (FUNCTION, PERFORMANCE, PATTERN)
201
203
SUBSTRATE PRODUCTION
MASK PRODUCTION
202
SUBSTRATE PROCESSING
204
DEVICE ASSEMBLING
205
INSPECTION
206
(SHIPPING)