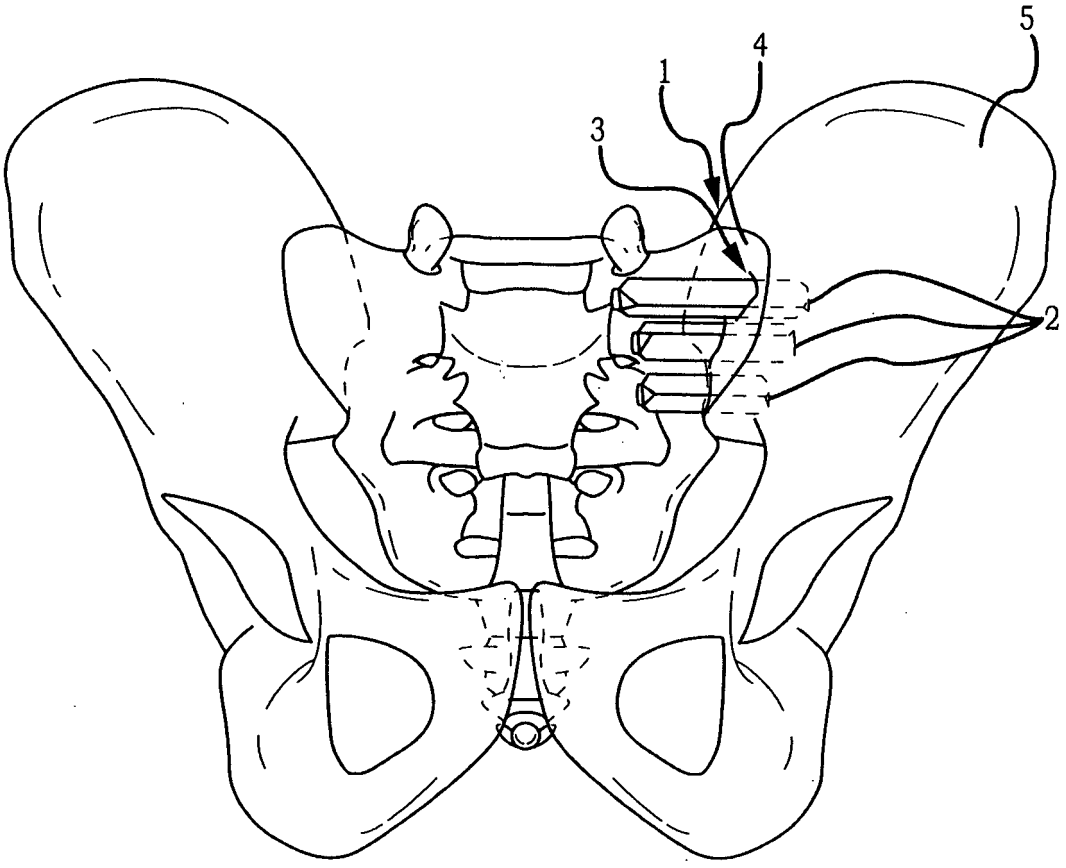

FIG. 1
CONVENTIONAL ART

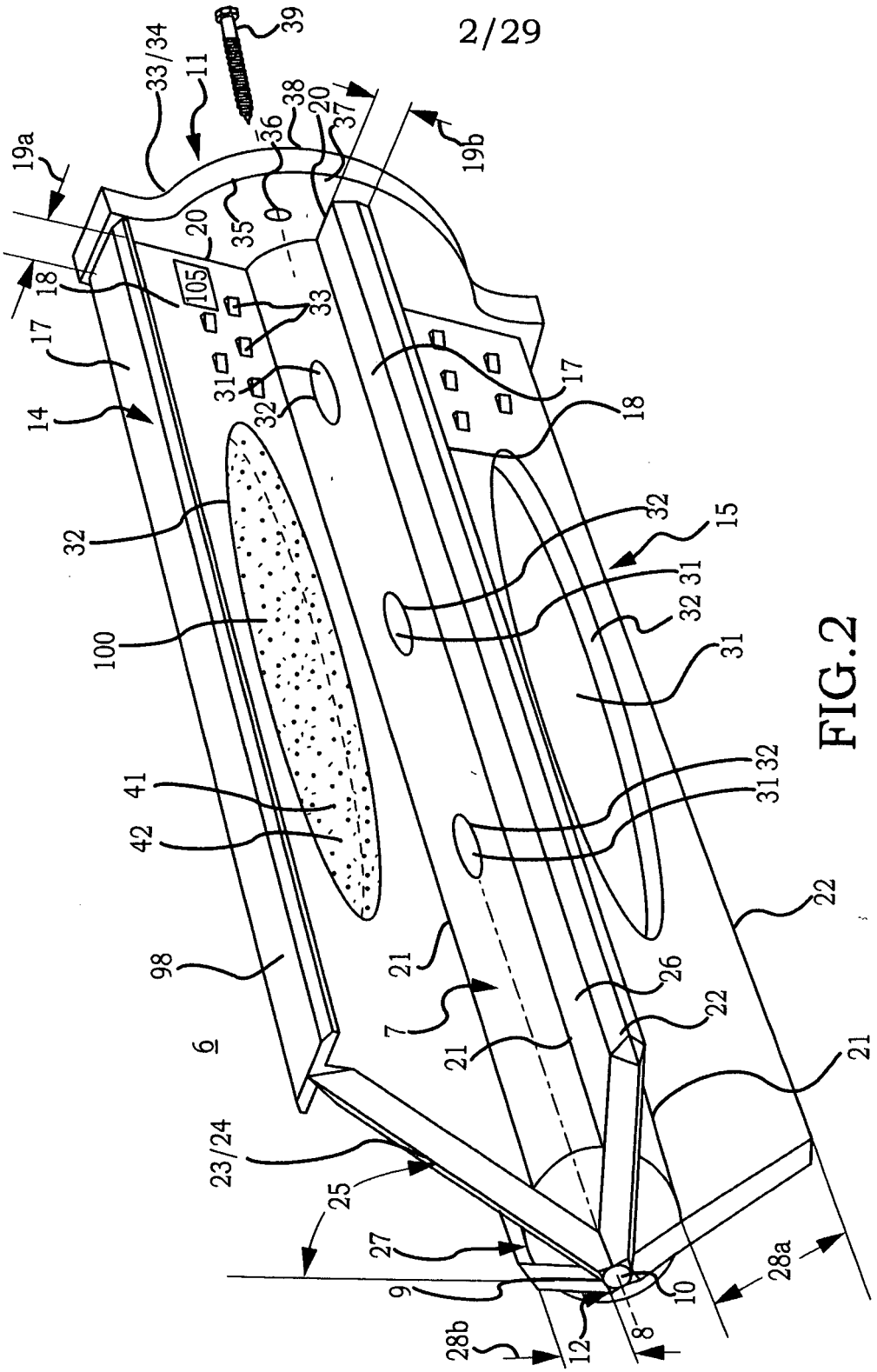
19a
33/34
11
39
38
20
37
36
35
19b
20
18
105
33
17
31
32
14
17
18
32
15
32
31
32
31
100
41
42
31 32
22
98
21
26
7
22
6
21
21
23/24
25
27
9
10
28a
28b
12
8

FIG.2

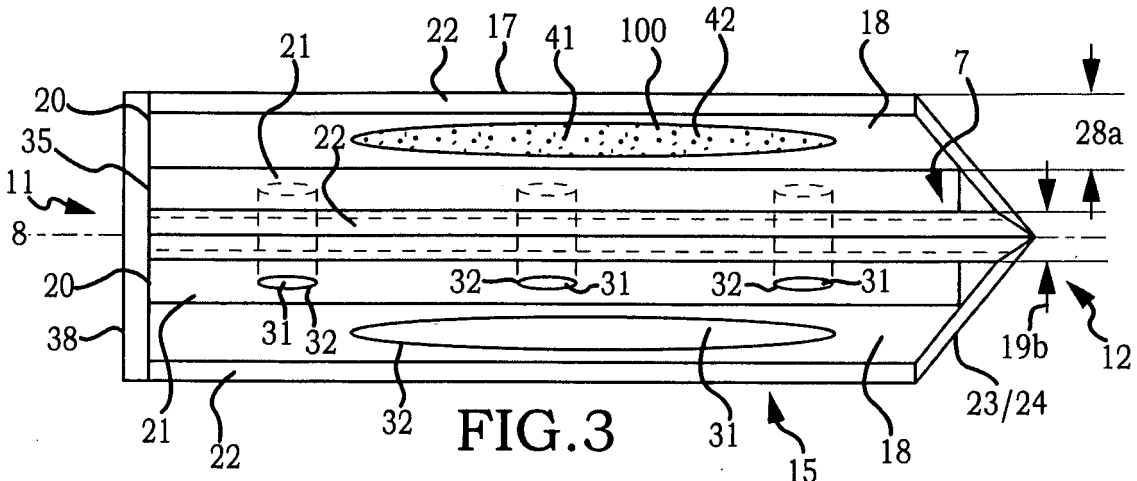

FIG.3

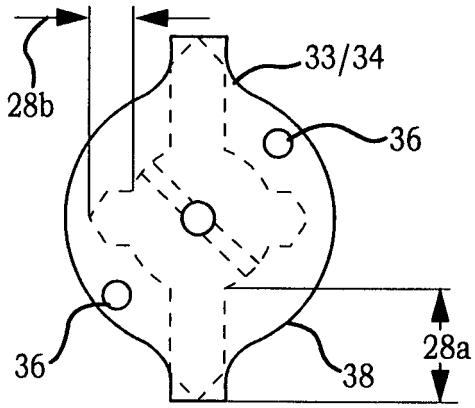

FIG.5

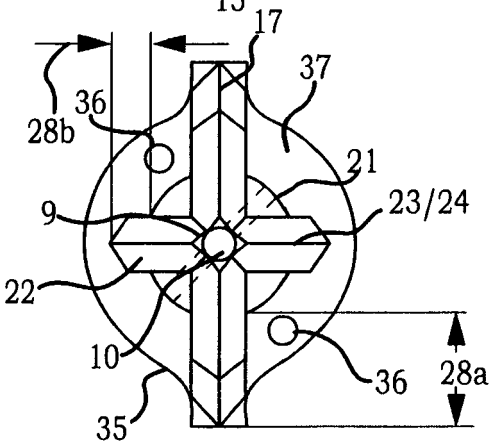

FIG.4

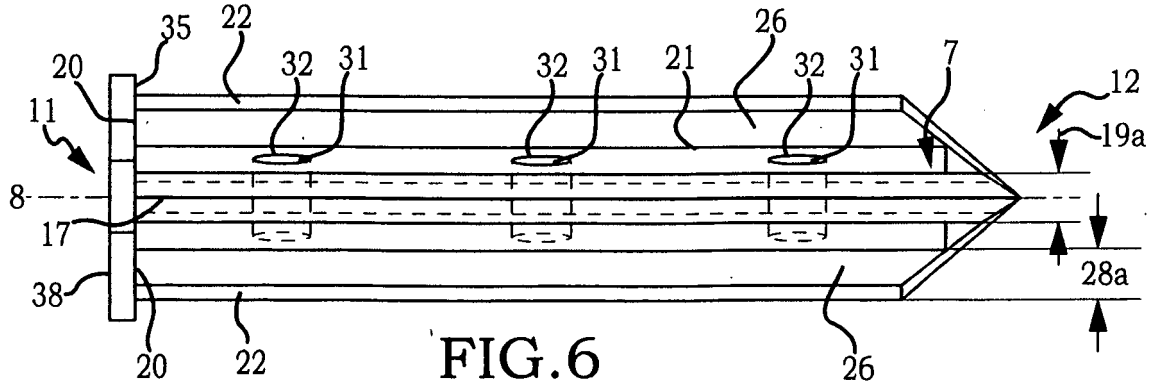

FIG.6

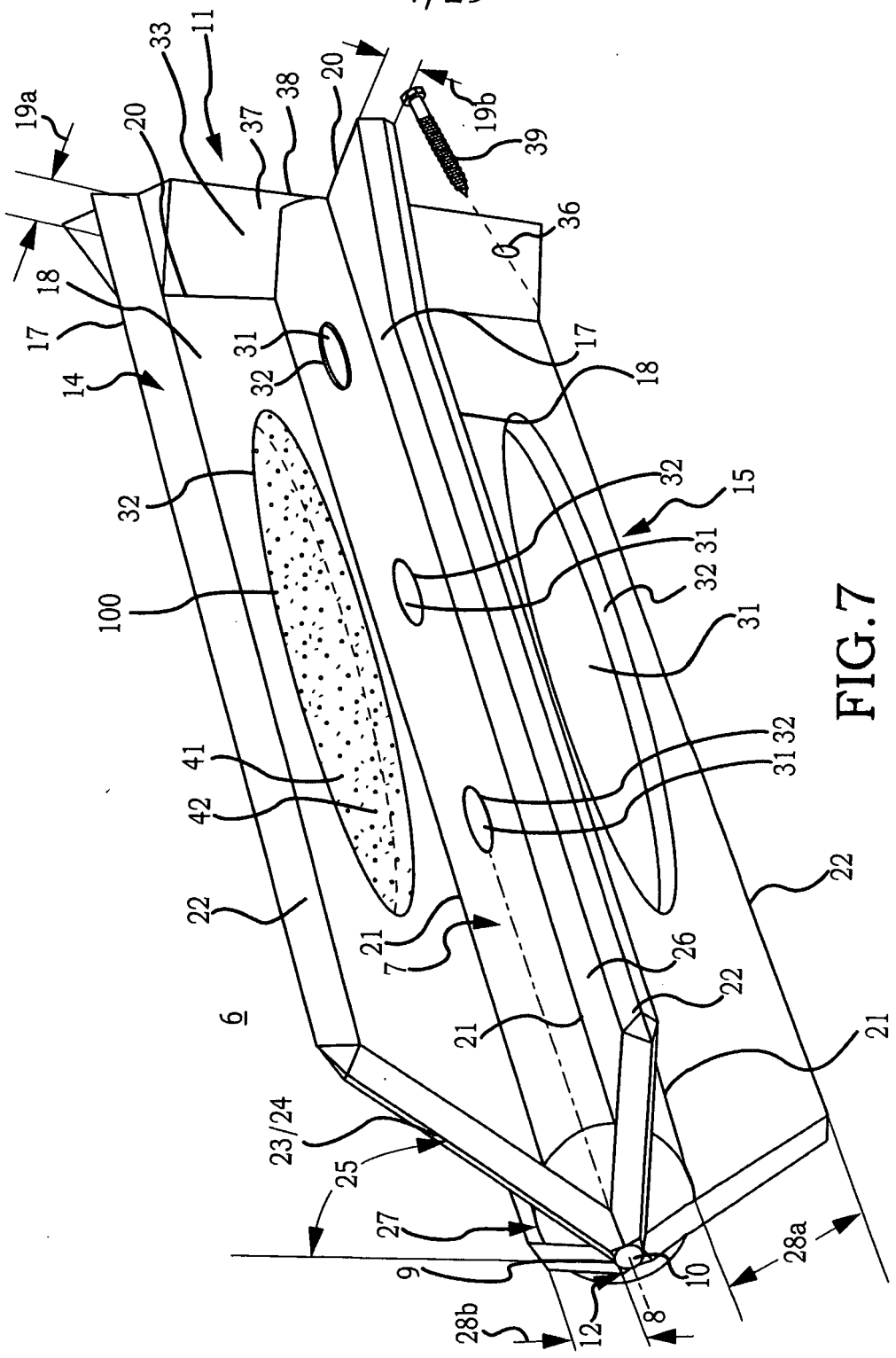
19a
20
33
11
37
38
20
19b
39
36
18
17
14
31
32
17
18
32
15
32
31
32
31
100
41
42
31 32
22
21
7
26
22
6
21
21
23/24
25
27
9
10
28a
28b
12
8

FIG.7

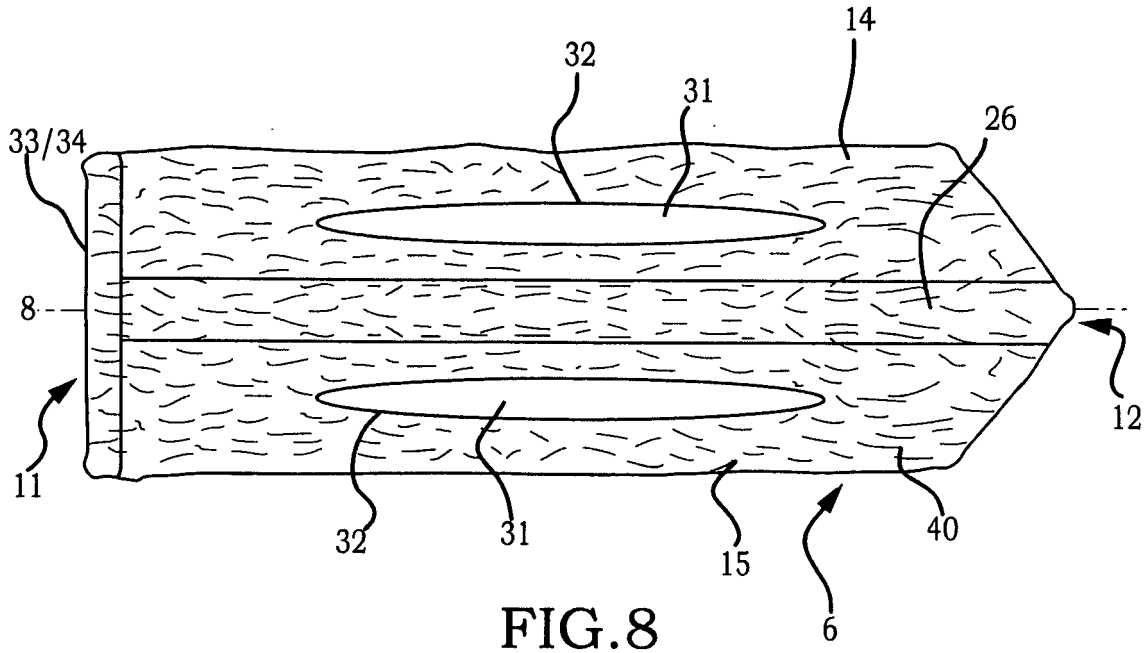

FIG.8

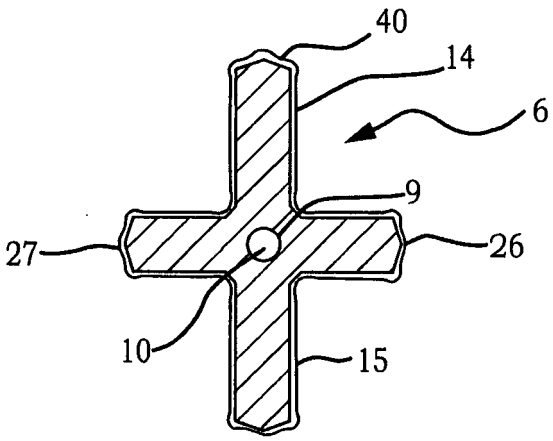

FIG.9

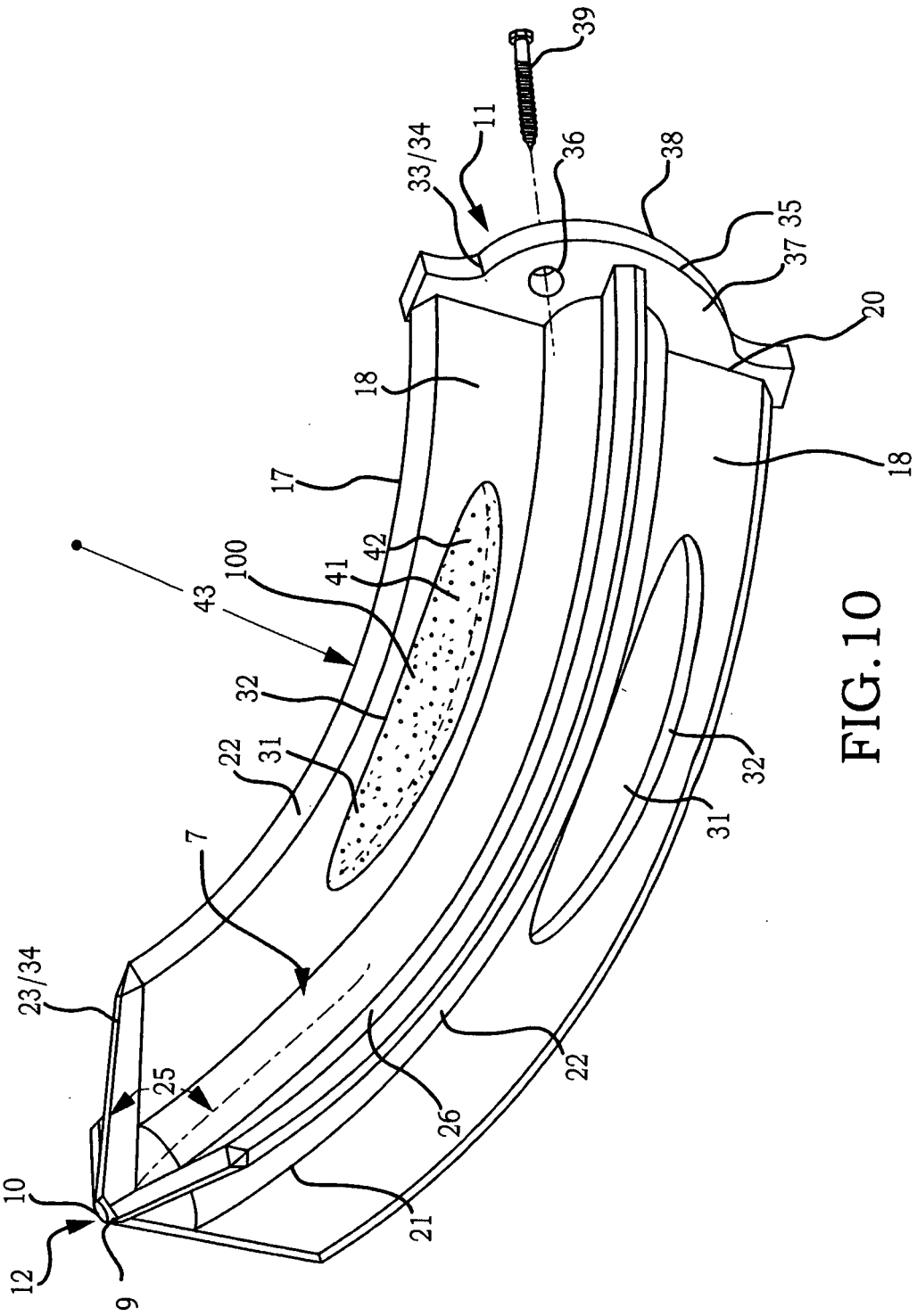
39
11
33/34
36
38
35
37
20
18
18
17
42
41
100
43
32
22
31
7
23/34
25
26
22
31
32
10
12
9
21

FIG.10

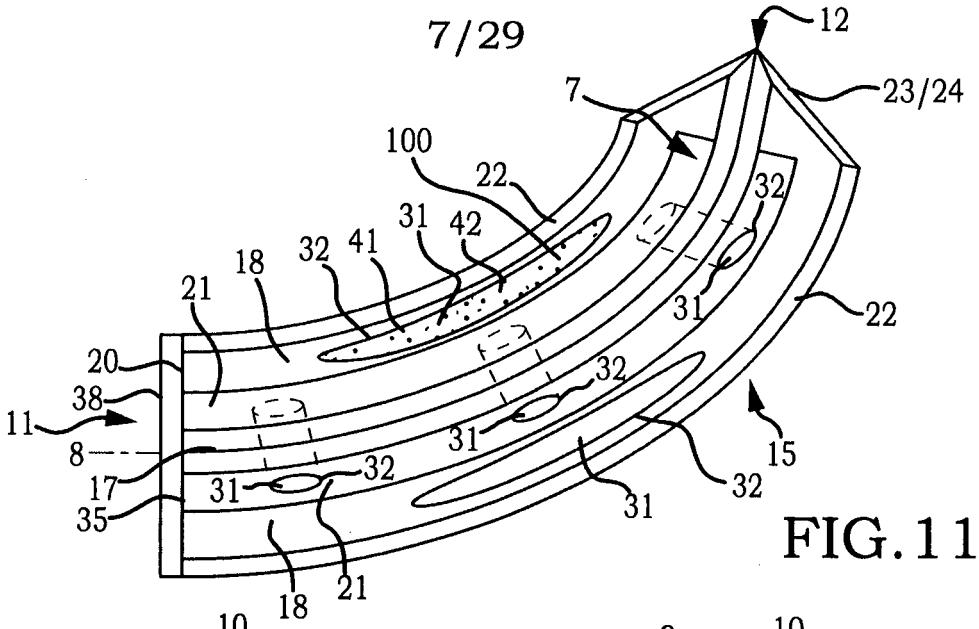

FIG. 11

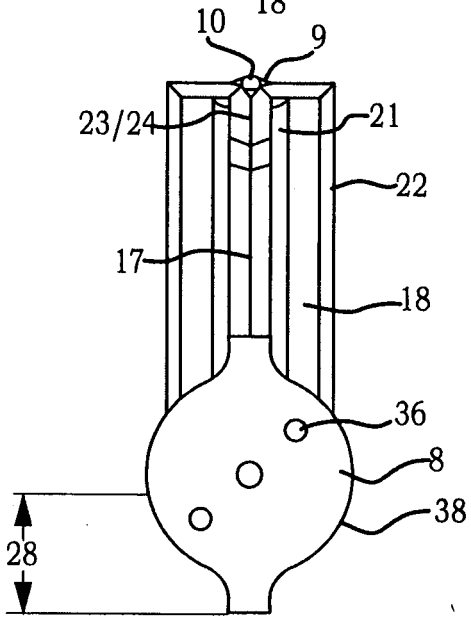

FIG. 12

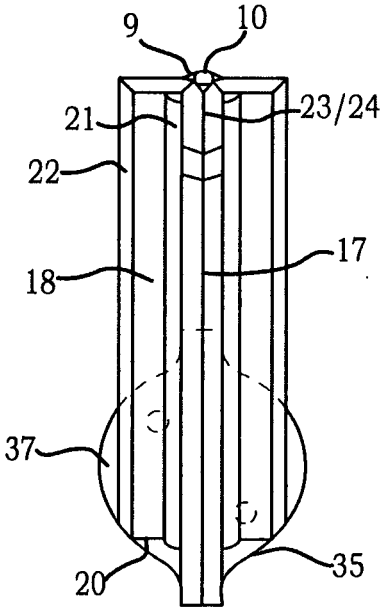

FIG. 13

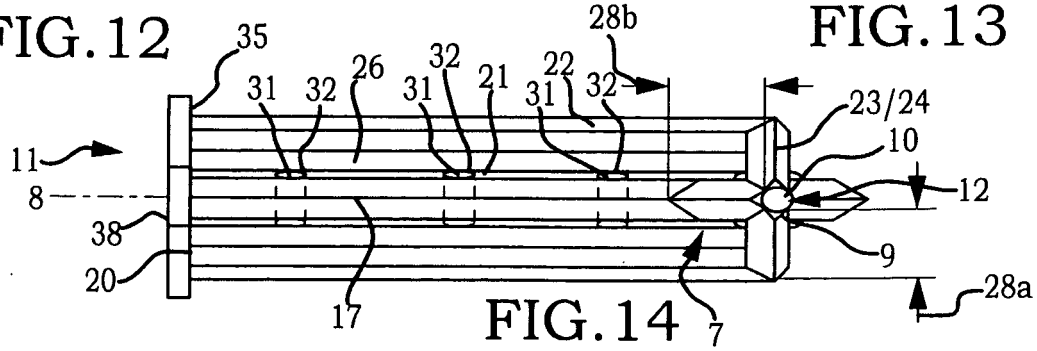

FIG. 14

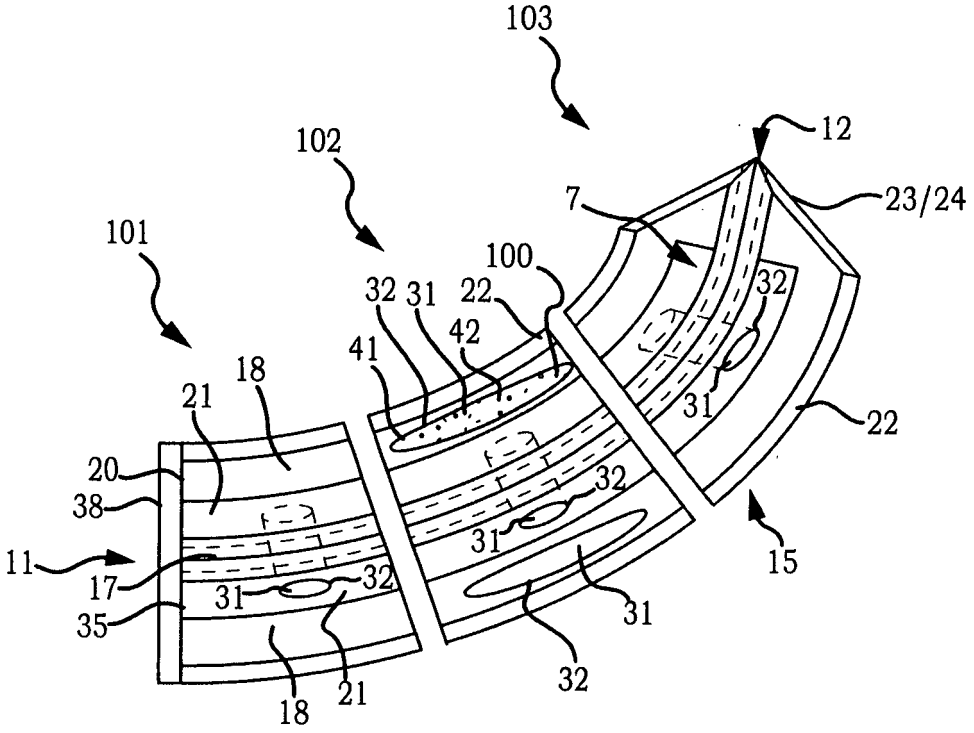
103
12
102
7
23/24
101
100
32
31
22
32
42
41
18
21
31
22
20
38
32
31
11
17
31
32
15
35
31
32
18
21

FIG.15

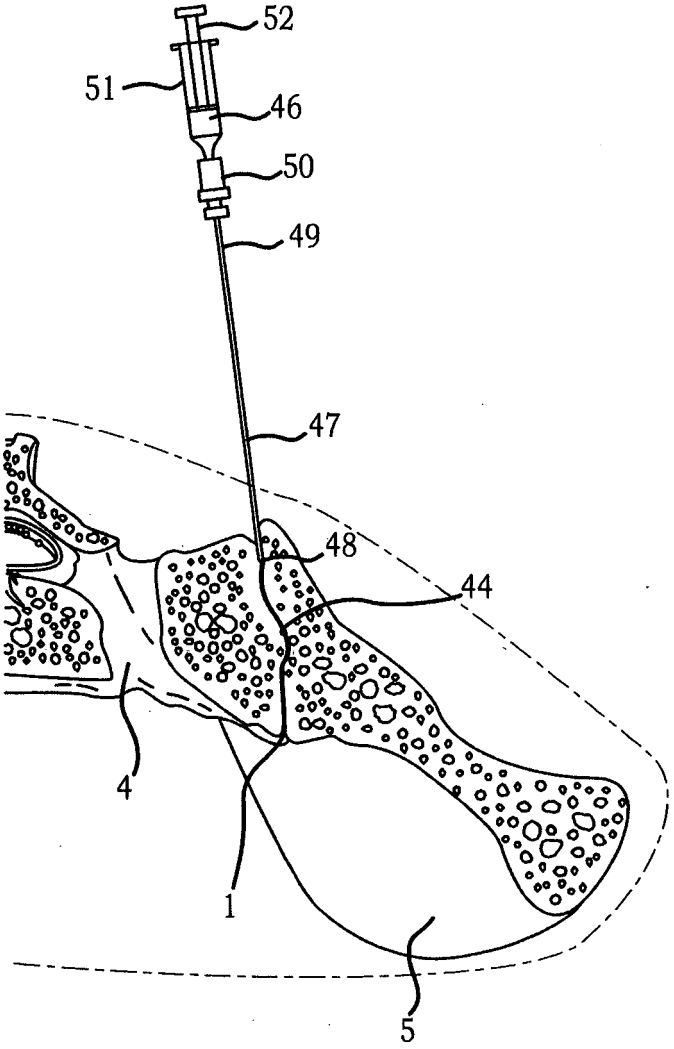

FIG. 16

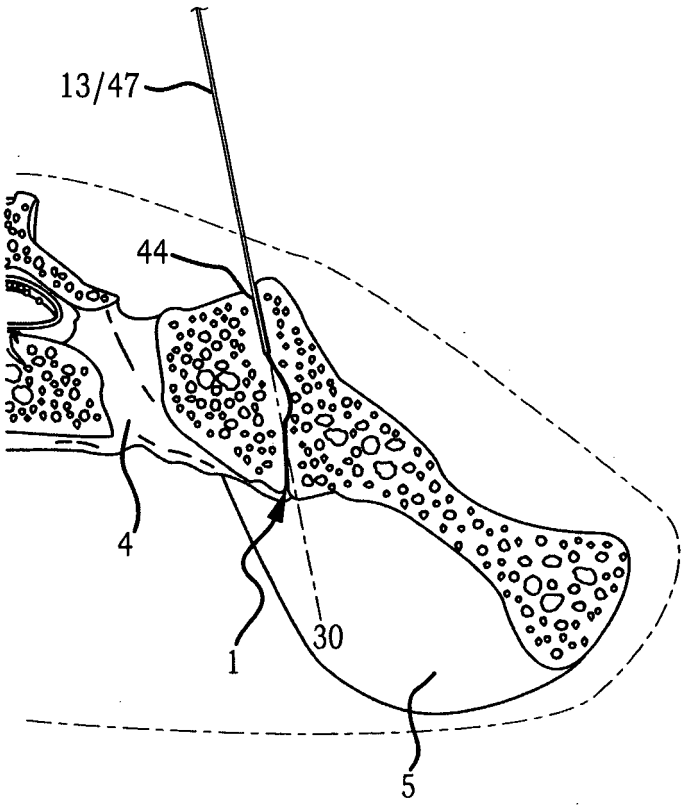

FIG. 17

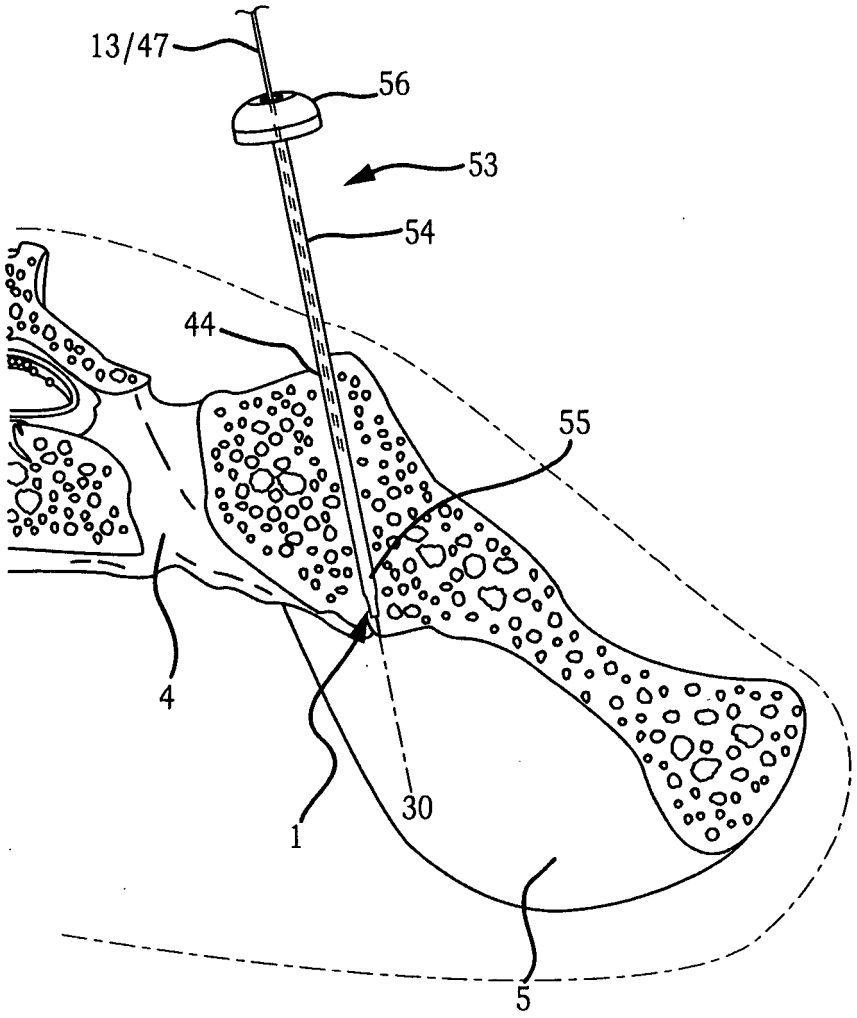

FIG. 18

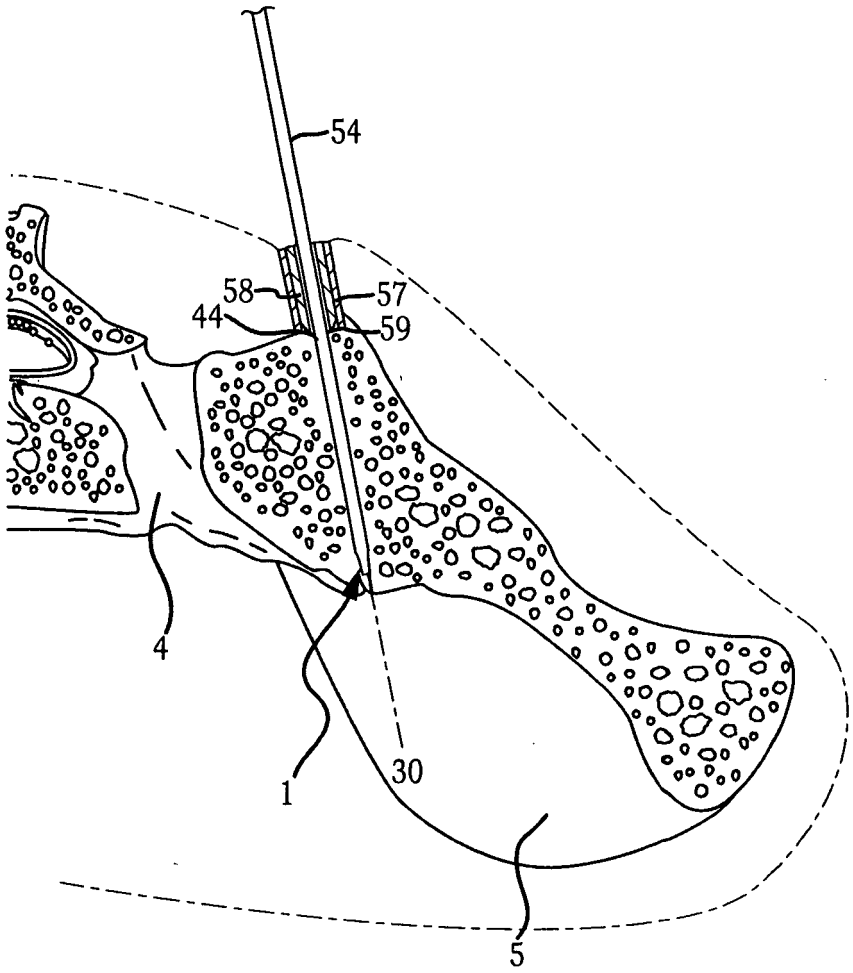

FIG. 19

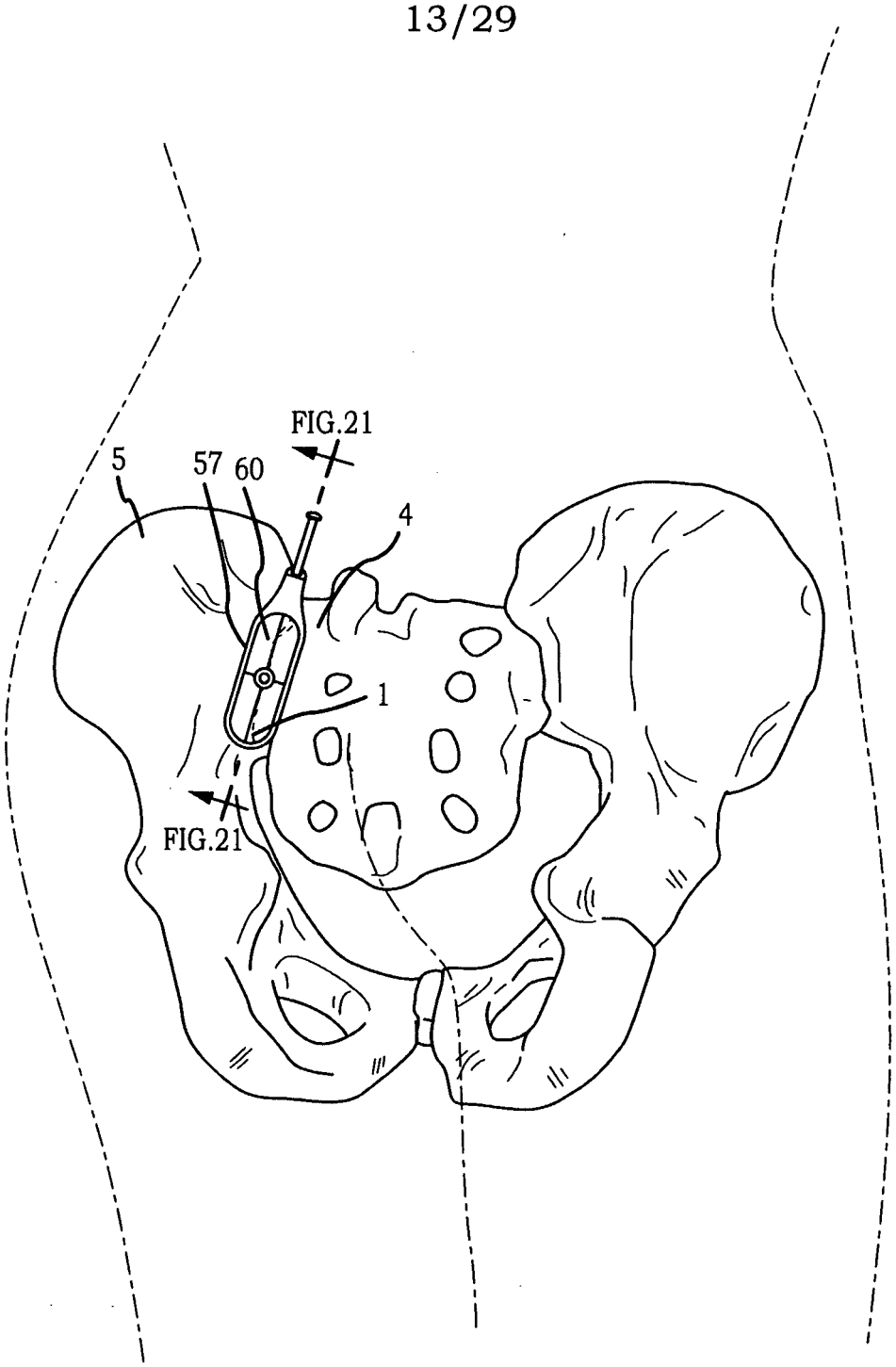

FIG.20A

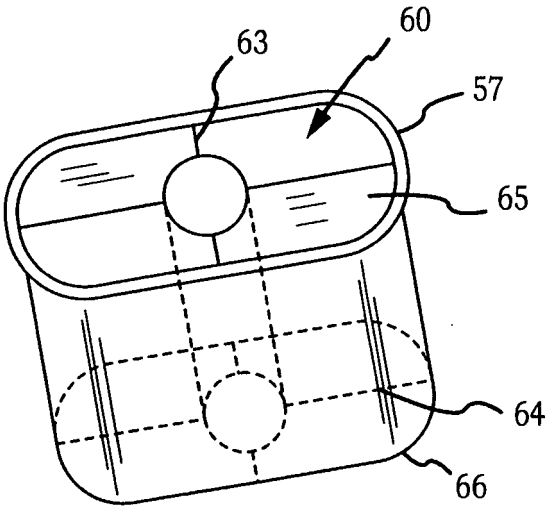

FIG.20B

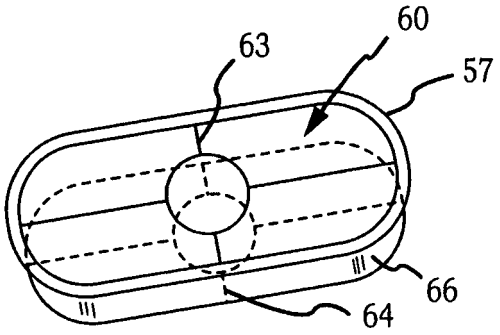

FIG.20C

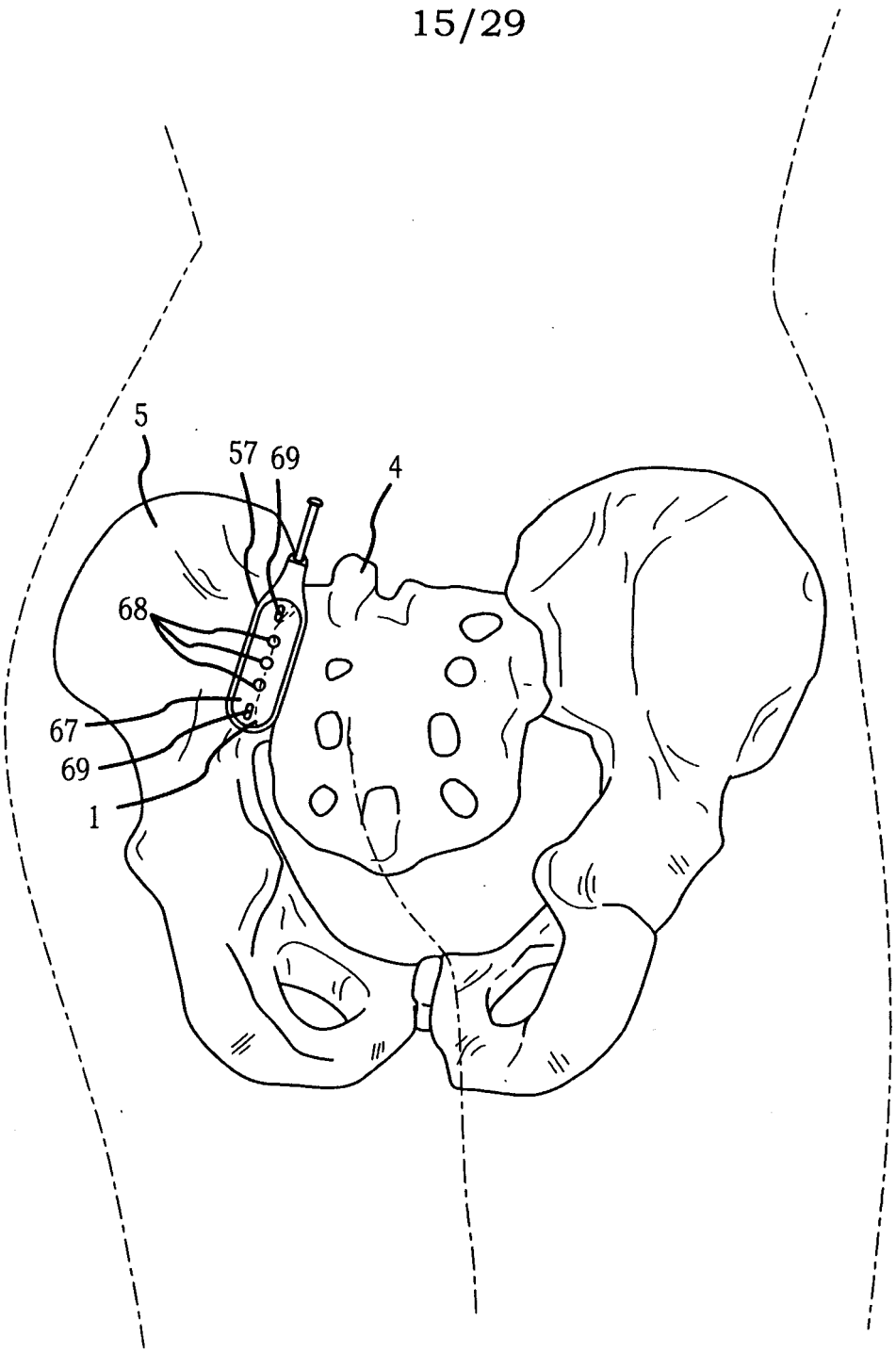

FIG.21A

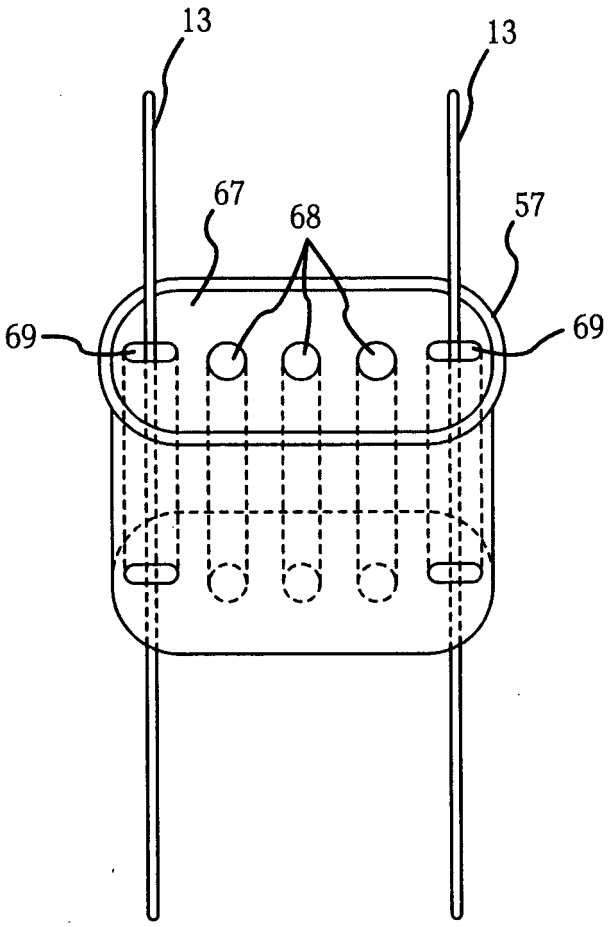

FIG.21B

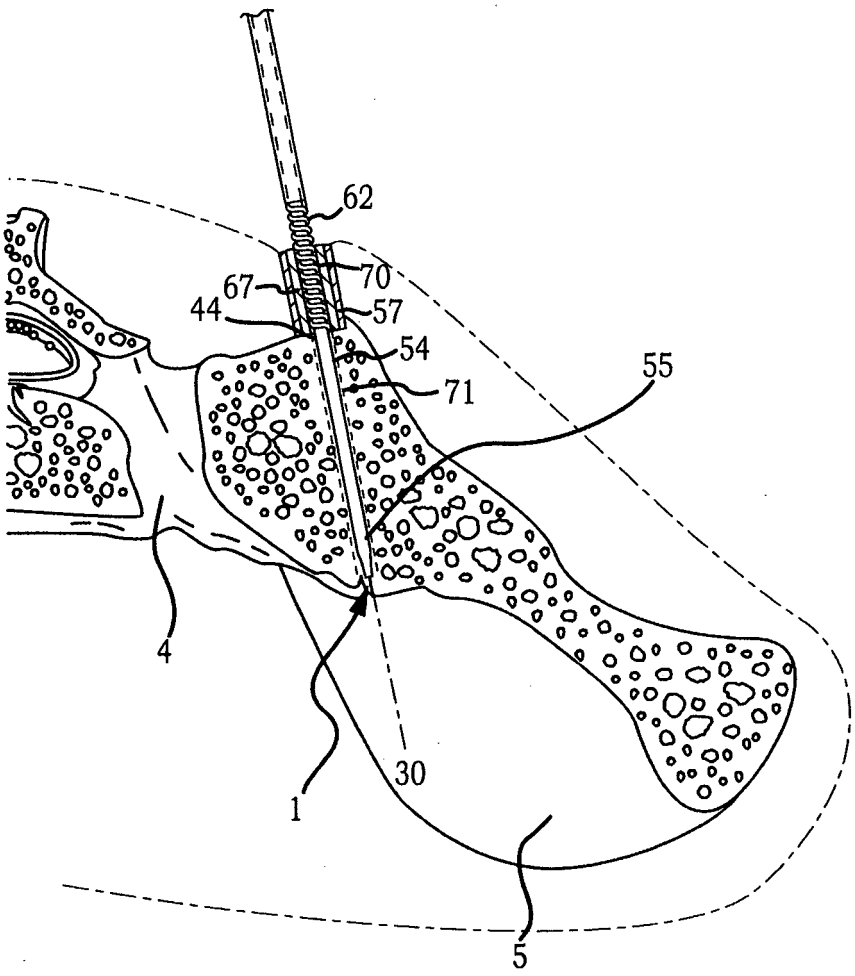

FIG.22

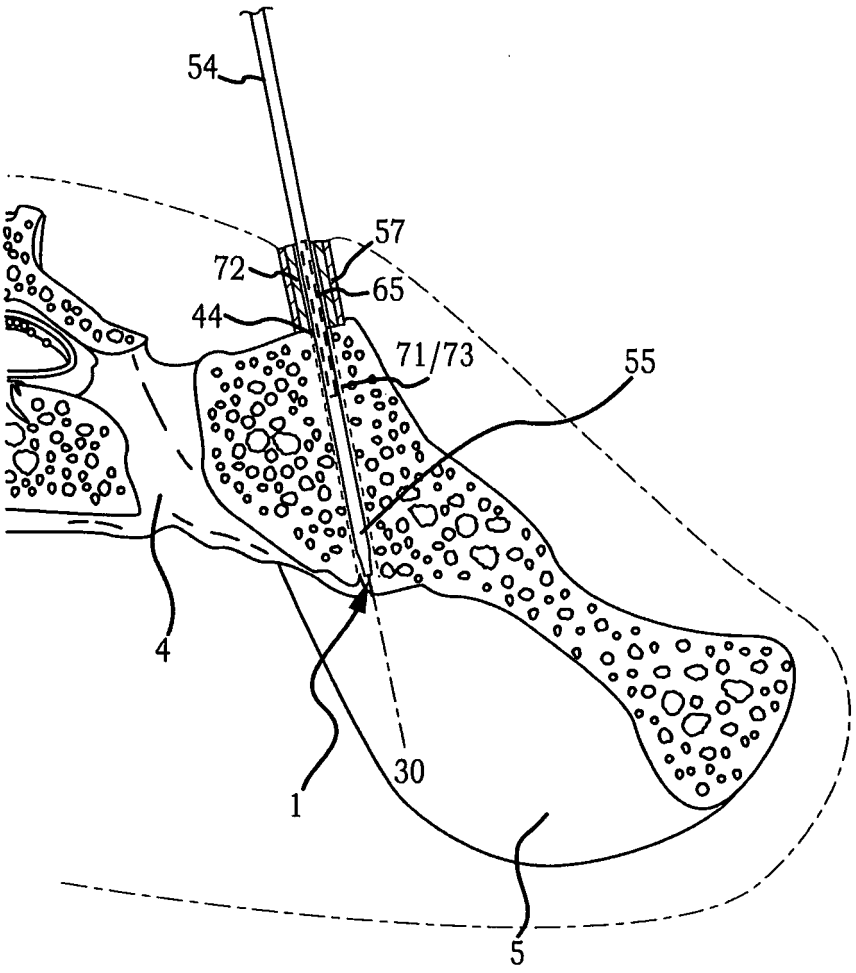

FIG.23

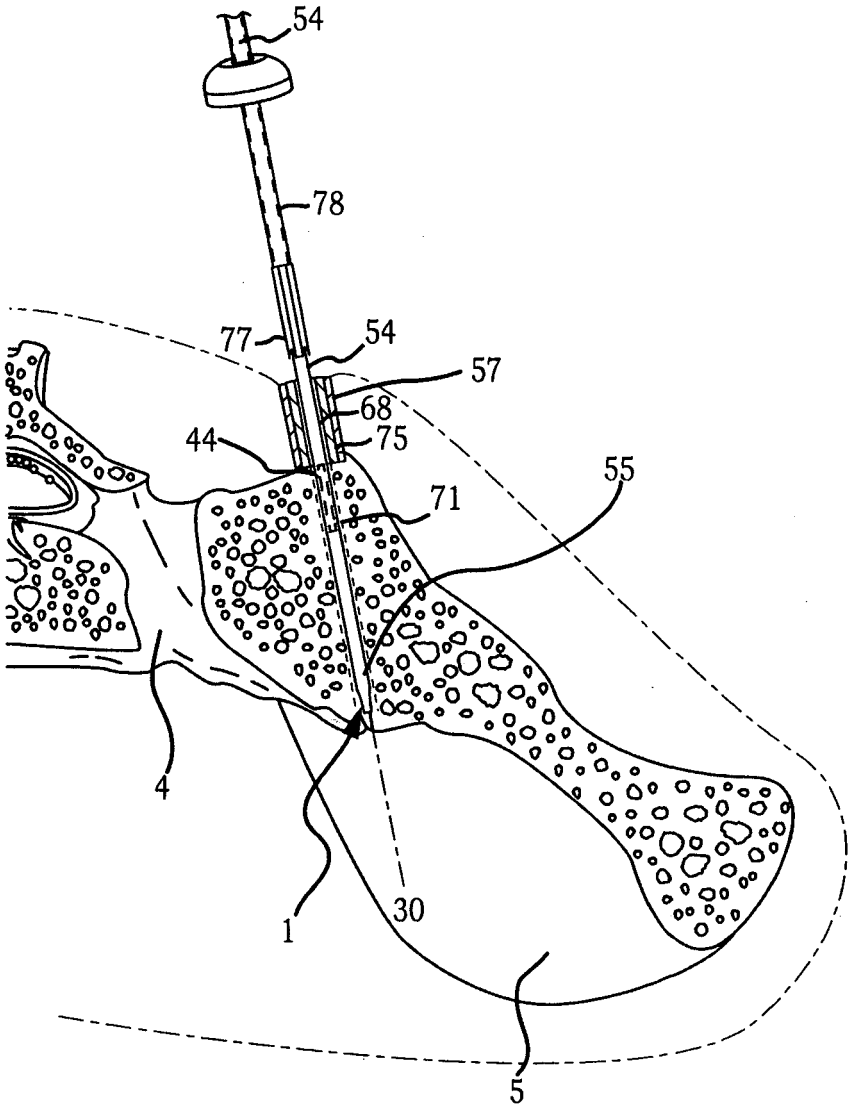

FIG.24

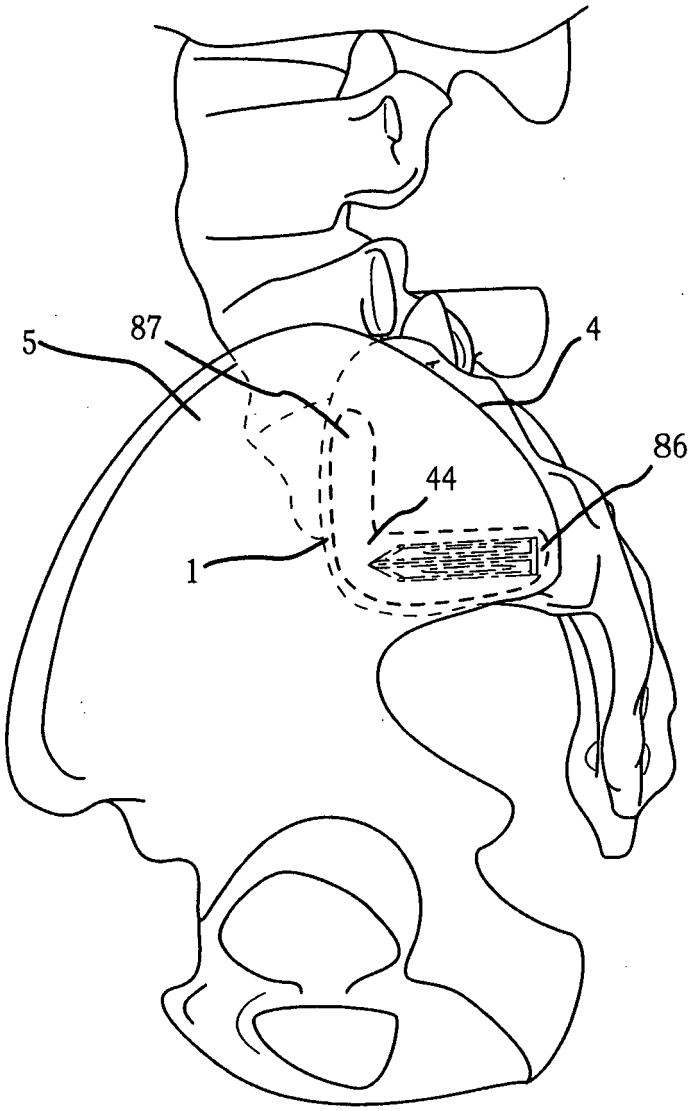

FIG.25

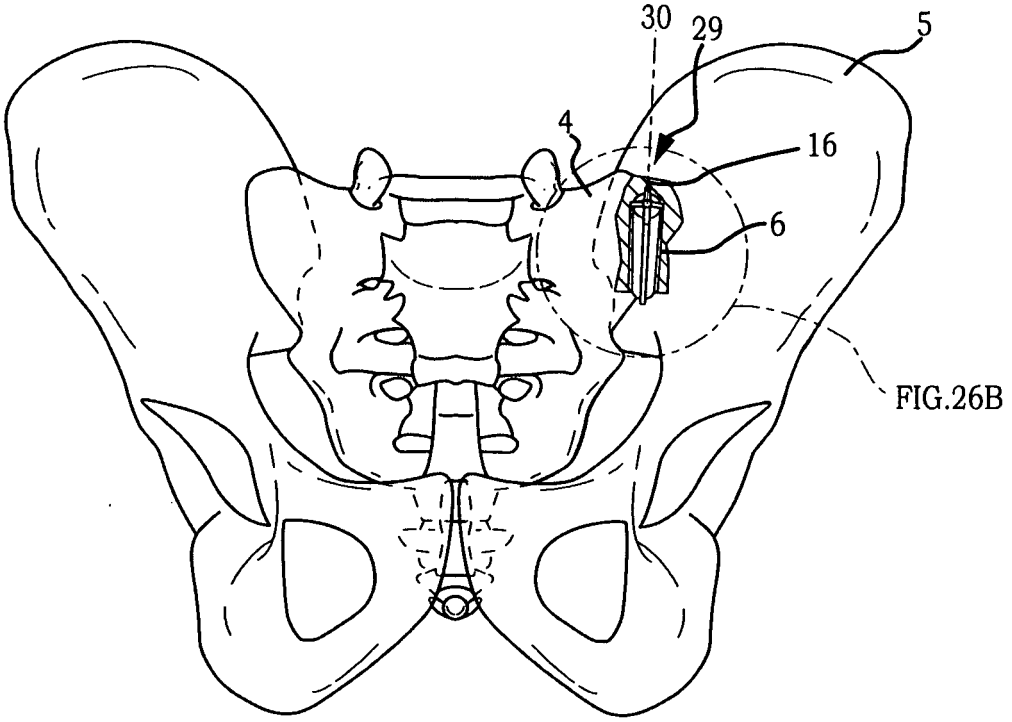

FIG.26A

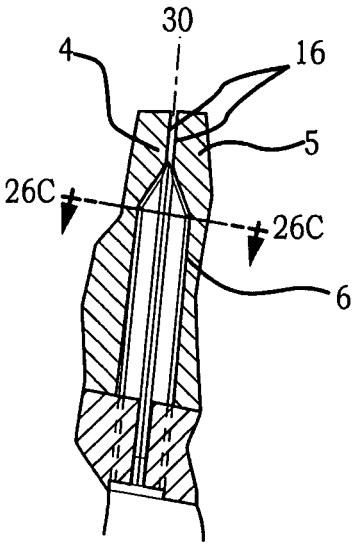

FIG.26B

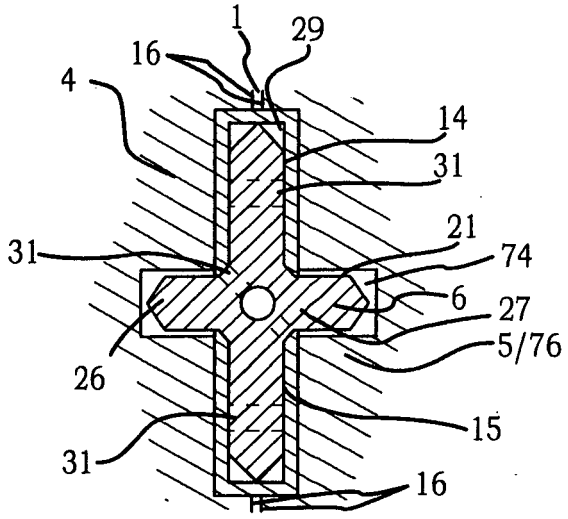

FIG.26C

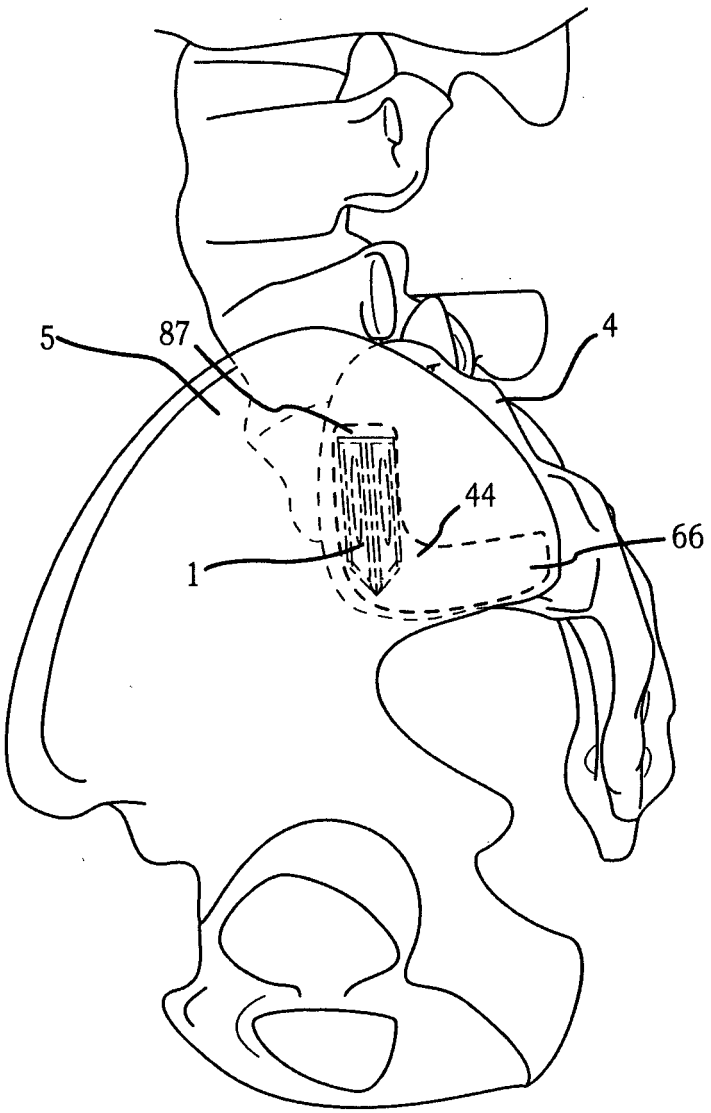

FIG.27

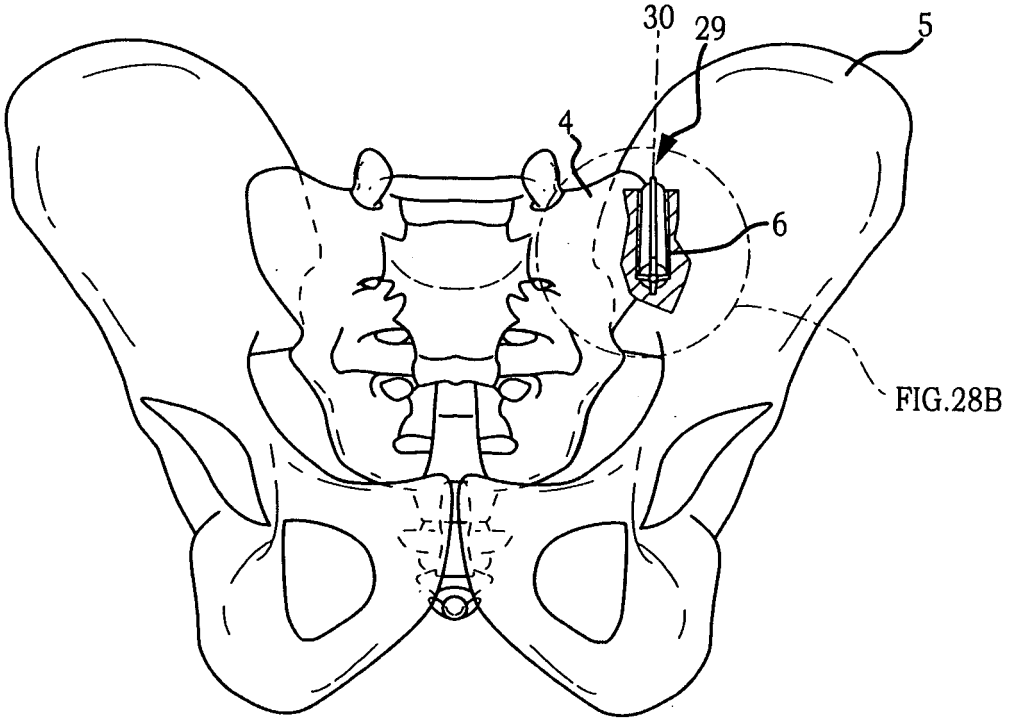

FIG.28A

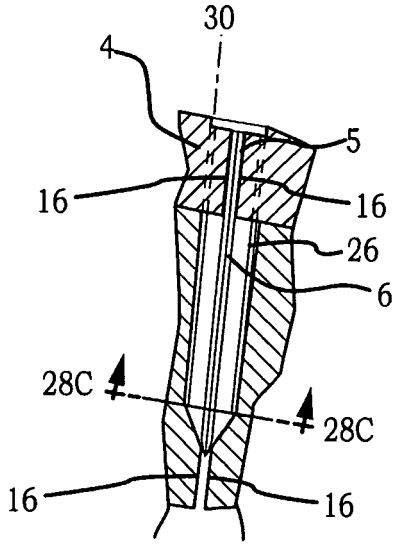

FIG.28B

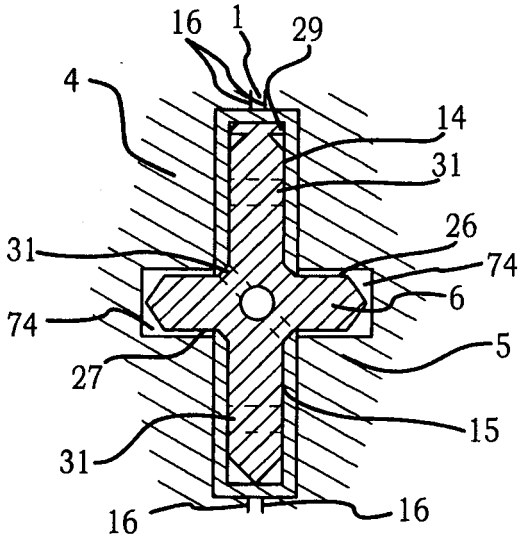

FIG.28C

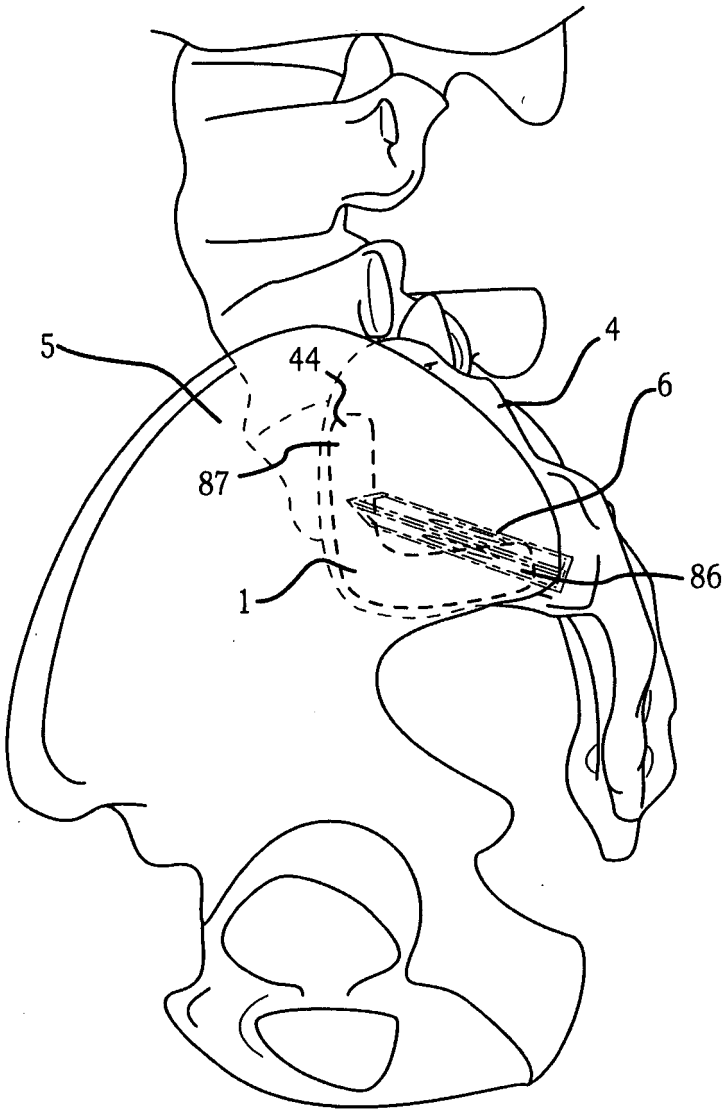

FIG.29

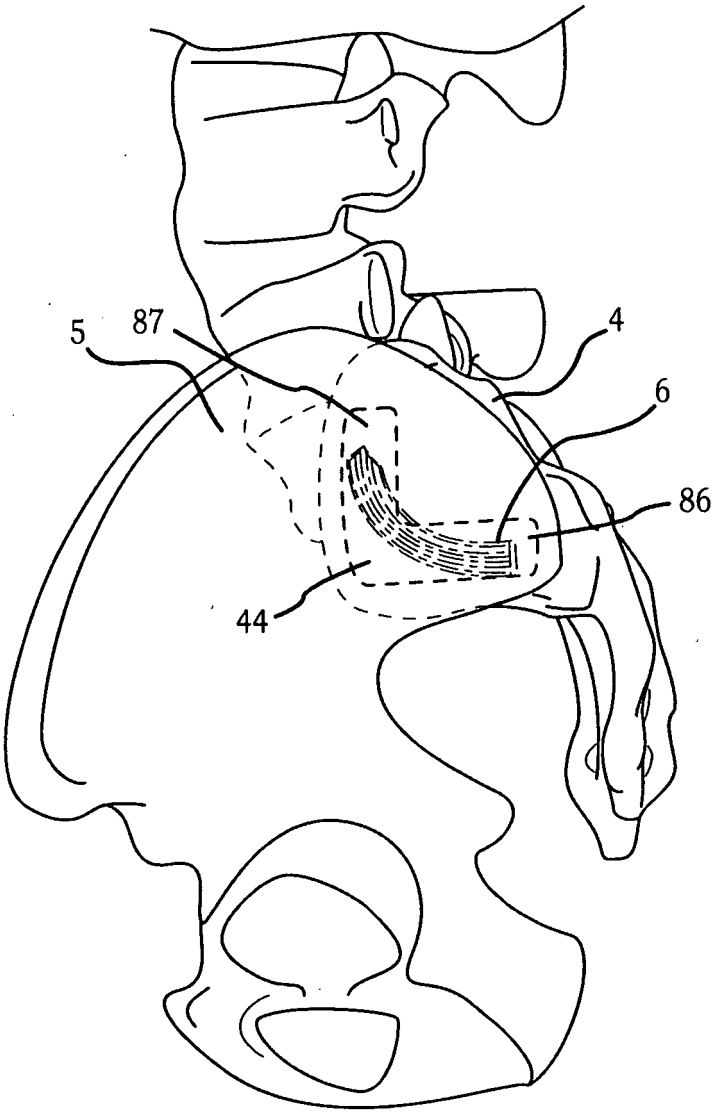

FIG.30

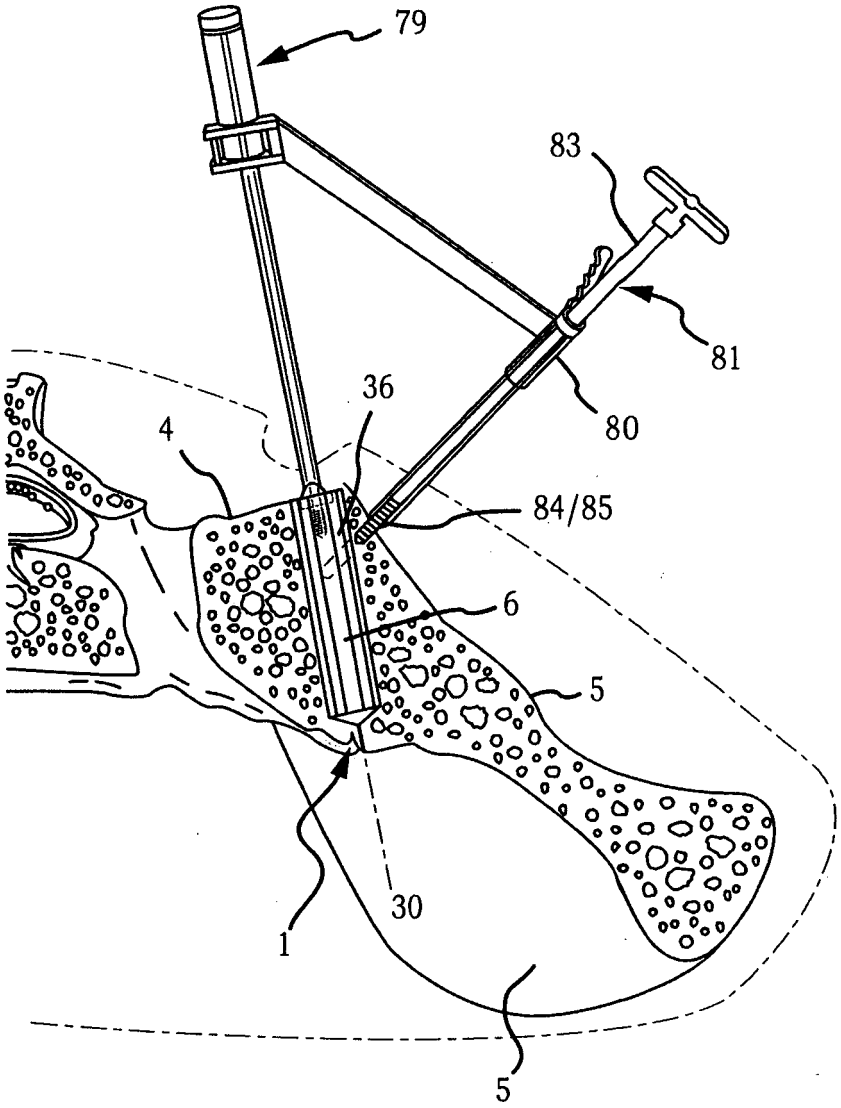

FIG.31

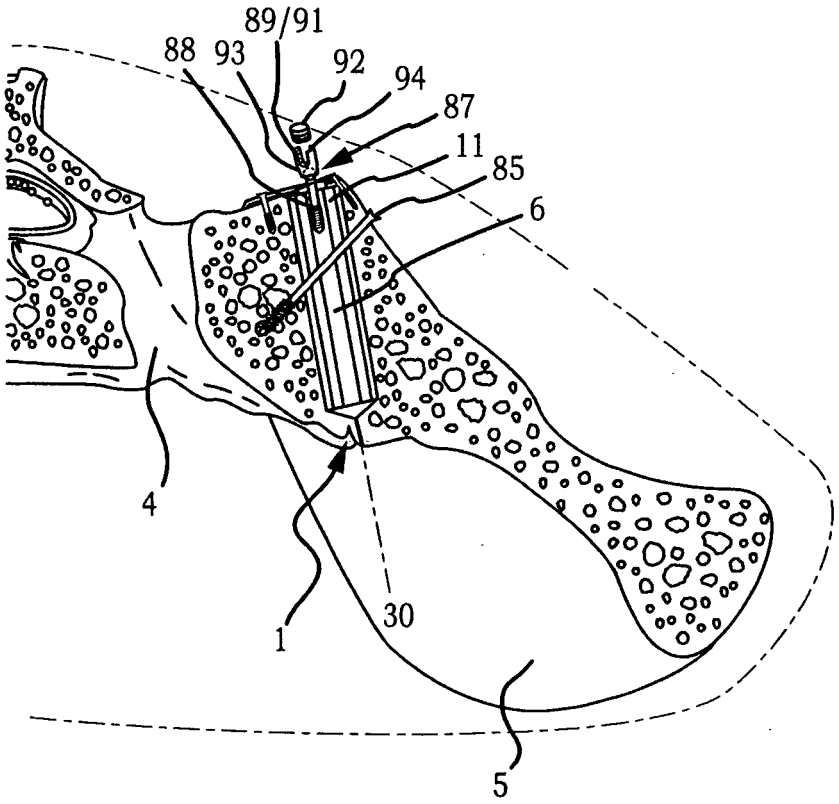

FIG.32

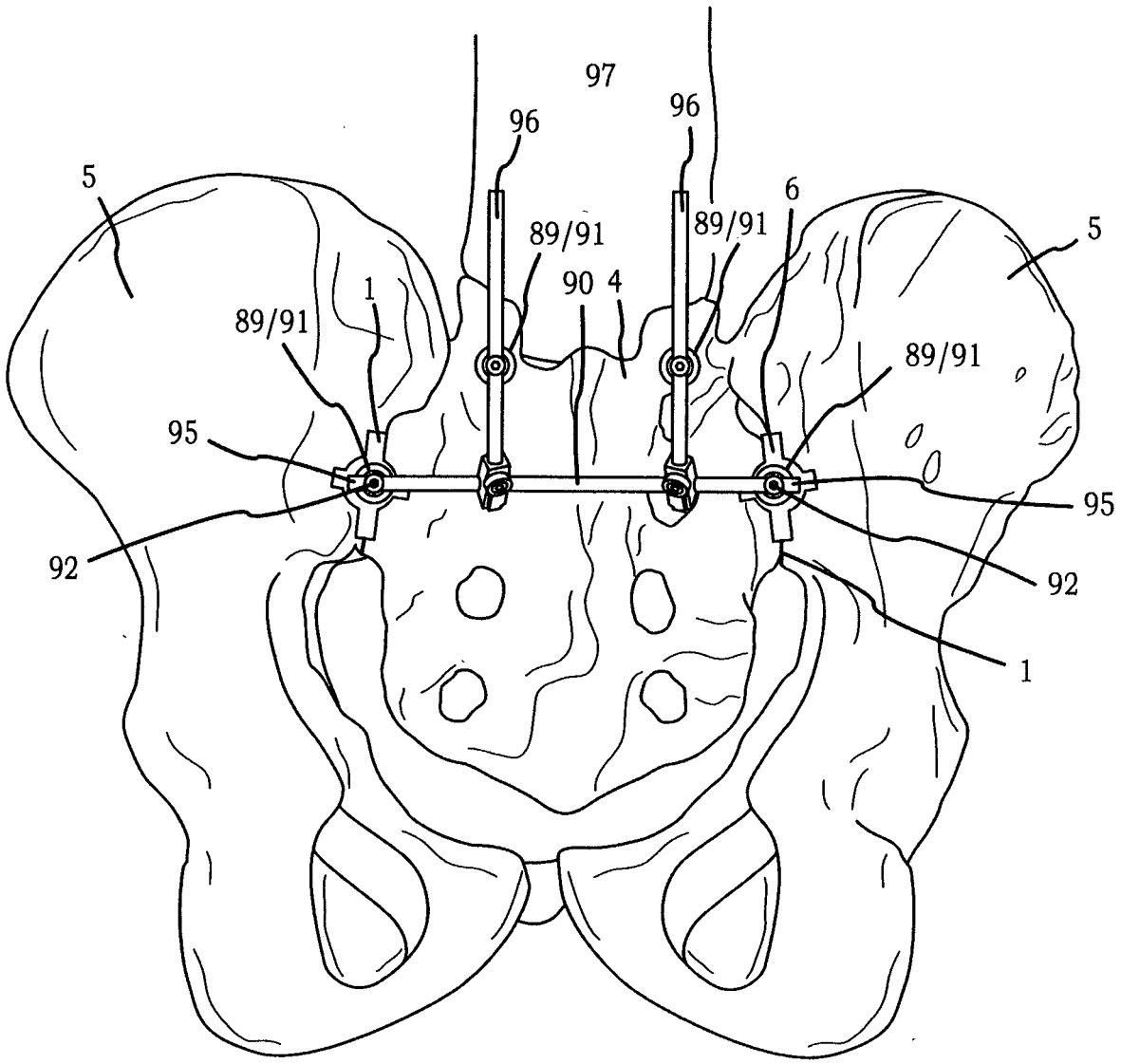

FIG.33

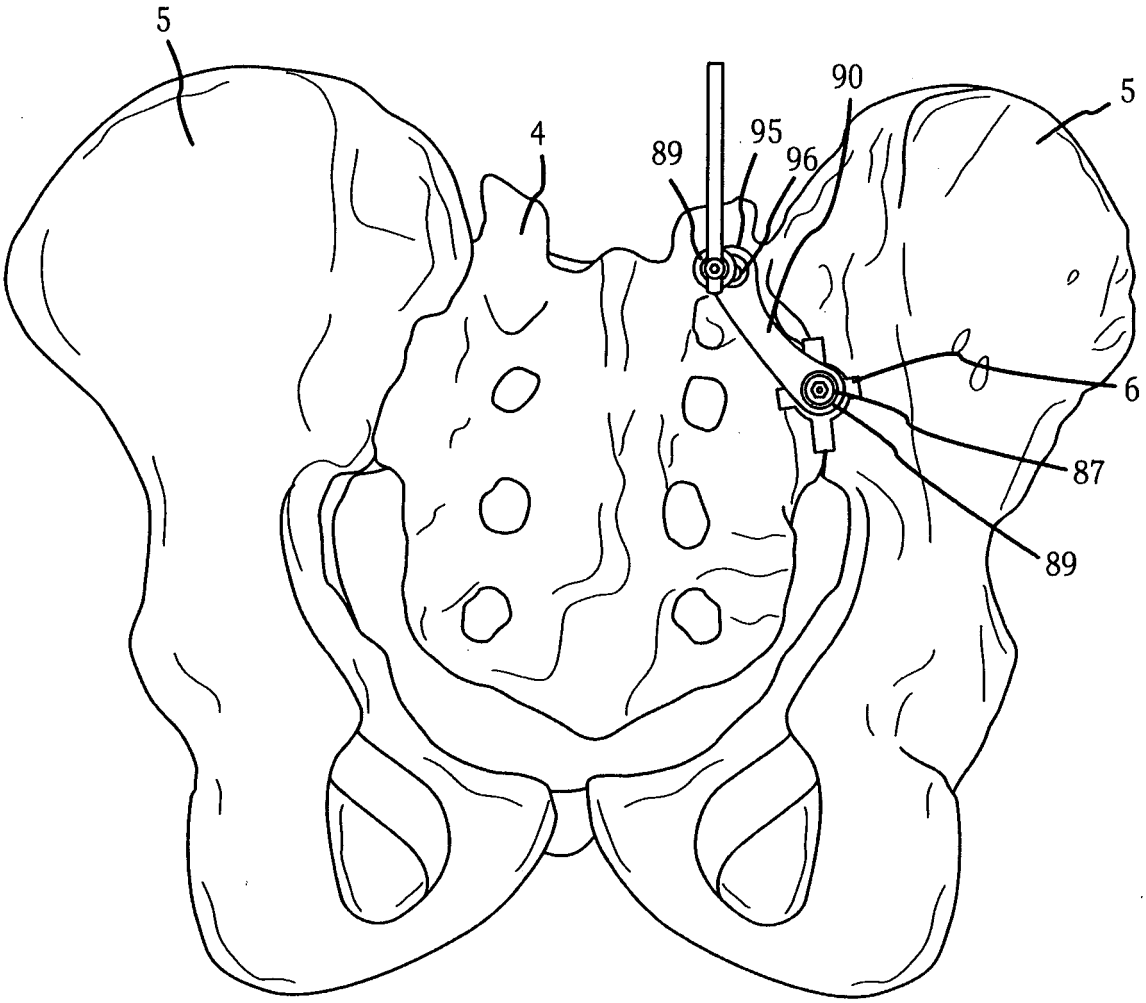

FIG.34