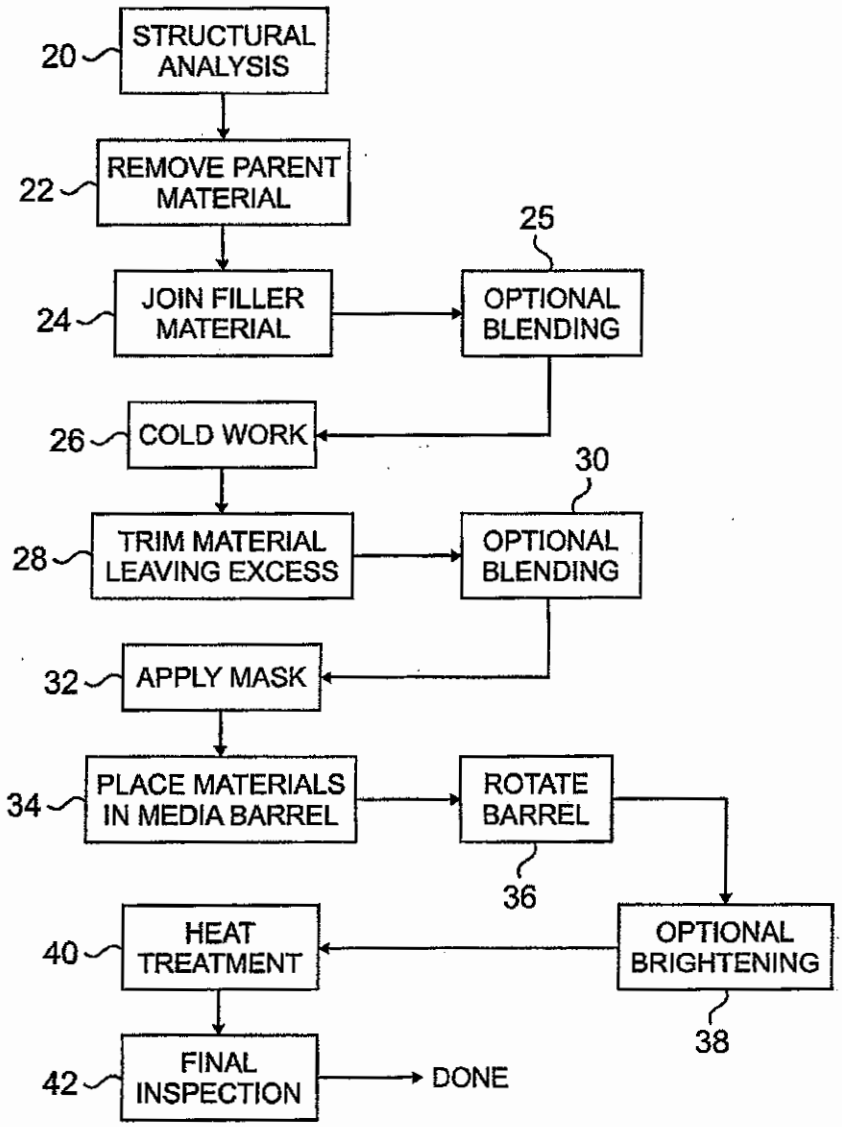
20
STRUCTURAL ANALYSIS
22
REMOVE PARENT MATERIAL
25
24
JOIN FILLER MATERIAL
OPTIONAL BLENDING
26
COLD WORK
30
28
TRIM MATERIAL LEAVING EXCESS
OPTIONAL BLENDING
32
APPLY MASK
34
PLACE MATERIALS IN MEDIA BARREL
ROTATE BARREL
36
40
HEAT TREATMENT
OPTIONAL BRIGHTENING
38
42
FINAL INSPECTION
DONE

FIG. 1

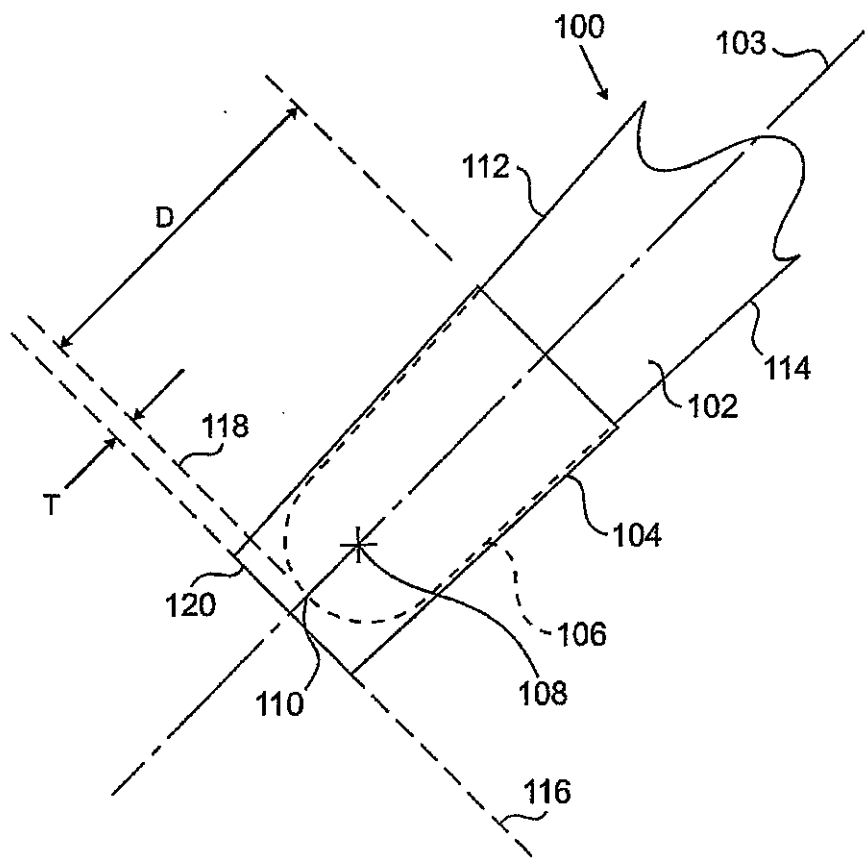

FIG. 2

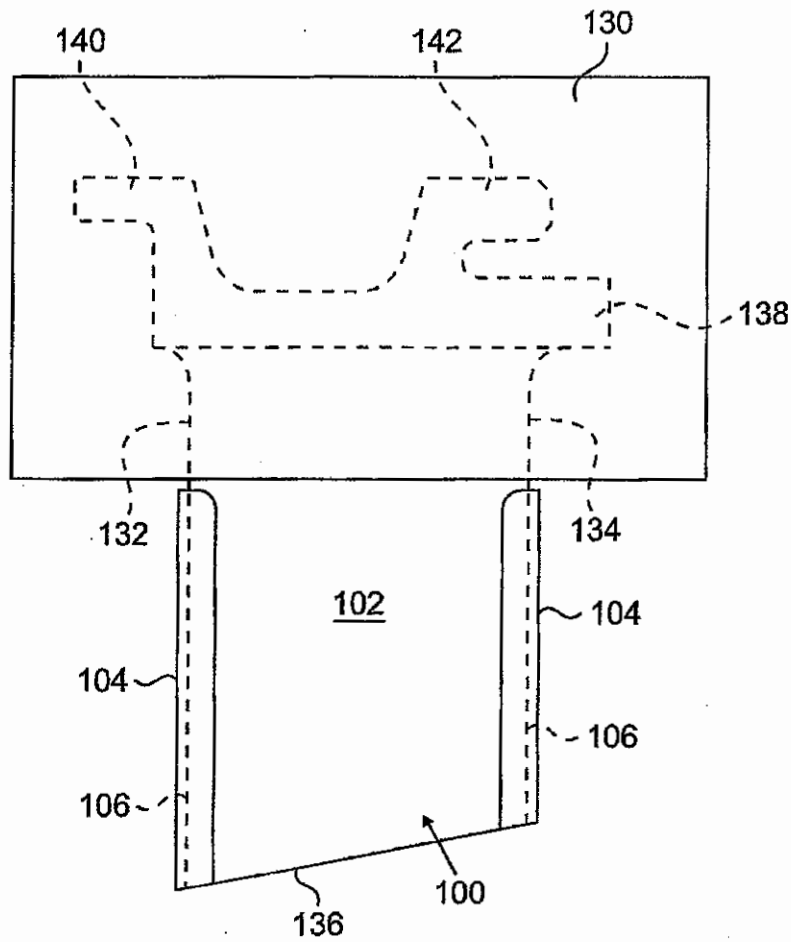

FIG. 3

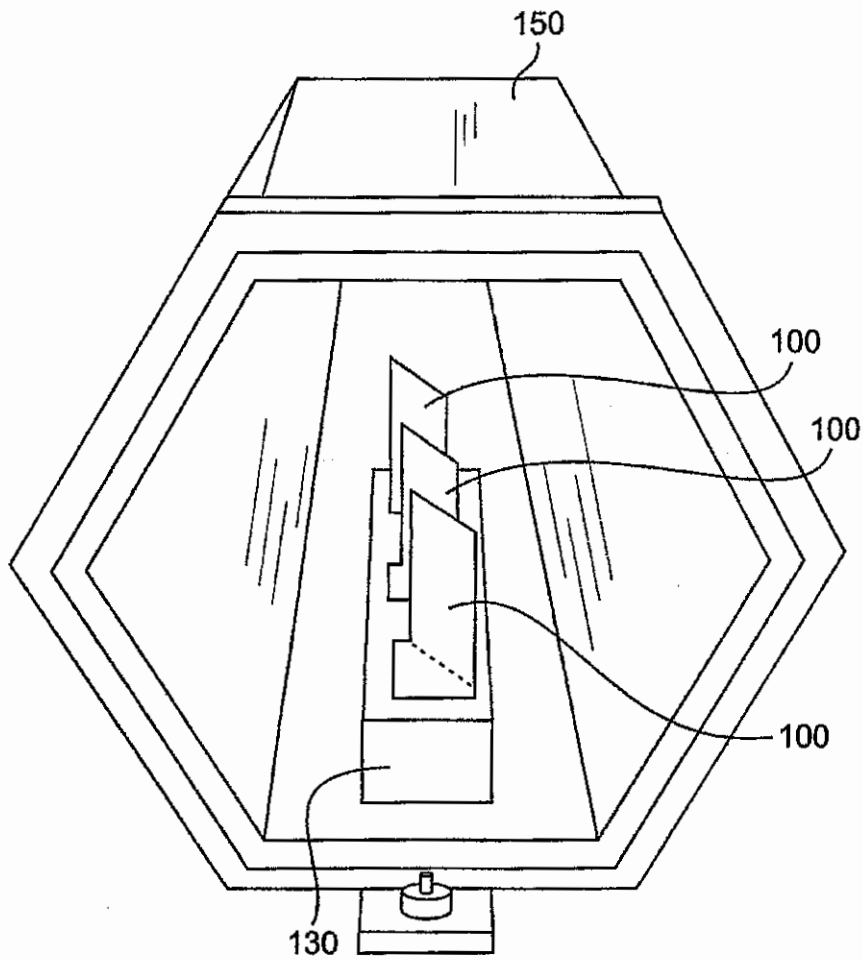

FIG. 4

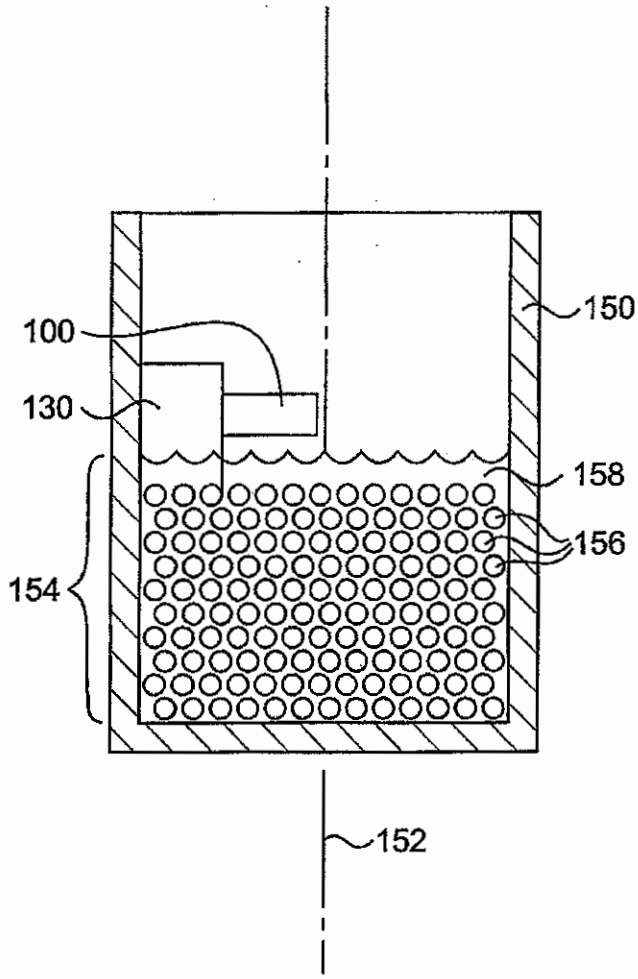

FIG. 5

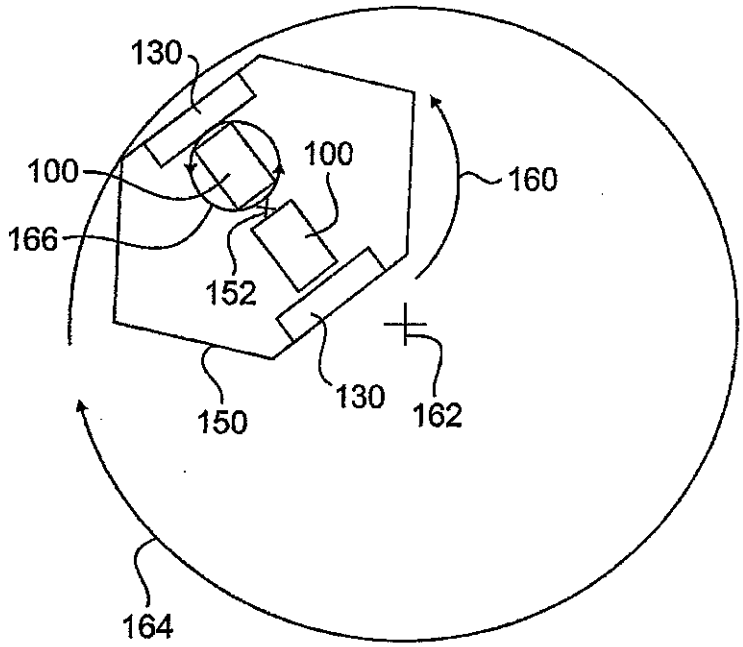
130
100
100
160
166
152
150
130
162
164

FIG. 6

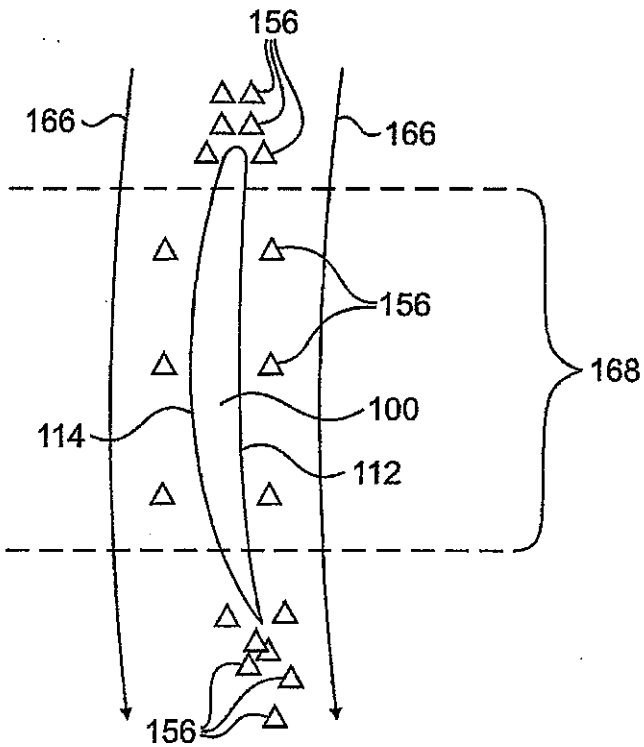
156
166
166
156
168
100
114
112
156

FIG. 7