(12) INTERNATIONAL APPLICATION PUBLISHED UNDER THE PATENT COOPERATION TREATY (PCT)

(19) World Intellectual Property Organization
International Bureau

(43) International Publication Date
30 October 2003 (30.10.2003)

PCT

(10) International Publication Number
WO 03/089803 A1

(51) International Patent Classification[7]: F16D 65/833, 65/853

(21) International Application Number: PCT/AU03/00443

(22) International Filing Date: 14 April 2003 (14.04.2003)

(25) Filing Language: English

(26) Publication Language: English

(30) Priority Data:
PS 1736 15 April 2002 (15.04.2002) AU

(71) Applicant *(for all designated States except US)*: **SAFE EFFECT PTY LTD** [AU/AU]; Suite 3, 75 Erindale Road, Balcatta, Western Australia 6021 (AU).

(72) Inventors; and

(75) Inventors/Applicants *(for US only)*: **NOWAK, Stan** [AU/AU]; Suite 3, 75 Erindale Road, Balcatta, Western Australia 6021 (AU). **KIERONSKA, Dorota, Helena** [AU/AU]; Suite 3, 75 Erindale Road, Balcatta, Western Australia 6021 (AU). **MORLEY, Vin, C.** [AU/AU]; Suite 3, 75 Erindale Road, Balcatta, Western Australia 6021 (AU).

(74) Agent: **MIZZI, Anthony, Paul**; Griffith Hack Patent Attorneys, 6th Floor, 256 Adelaide Terrace, Perth, Western Australia 6000 (AU).

(81) Designated States *(national)*: AE, AG, AL, AM, AT, AU, AZ, BA, BB, BG, BR, BY, BZ, CA, CH, CN, CO, CR, CU, CZ, DE, DK, DM, DZ, EC, EE, ES, FI, GB, GD, GE, GH, GM, HR, HU, ID, IL, IN, IS, JP, KE, KG, KP, KR, KZ, LC, LK, LR, LS, LT, LU, LV, MA, MD, MG, MK, MN, MW, MX, MZ, NI, NO, NZ, OM, PH, PL, PT, RO, RU, SC, SD, SE, SG, SK, SL, TJ, TM, TN, TR, TT, TZ, UA, UG, US, UZ, VC, VN, YU, ZA, ZM, ZW.

(84) Designated States *(regional)*: ARIPO patent (GH, GM, KE, LS, MW, MZ, SD, SL, SZ, TZ, UG, ZM, ZW), Eurasian patent (AM, AZ, BY, KG, KZ, MD, RU, TJ, TM), European patent (AT, BE, BG, CH, CY, CZ, DE, DK, EE, ES, FI, FR, GB, GR, HU, IE, IT, LU, MC, NL, PT, RO, SE, SI, SK, TR), OAPI patent (BF, BJ, CF, CG, CI, CM, GA, GN, GQ, GW, ML, MR, NE, SN, TD, TG).

Published:
— *with international search report*

[Continued on next page]

(54) Title: FLUID COOLED BRAKE HOUSING

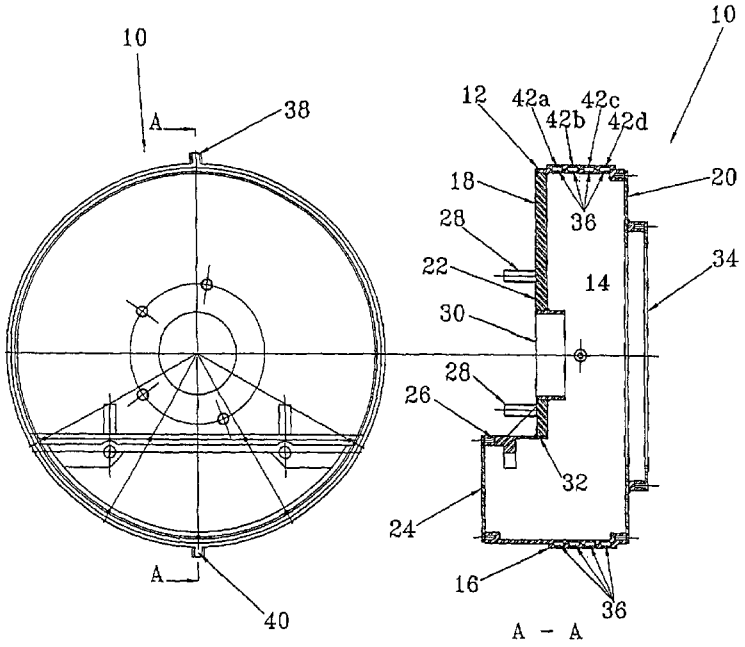

(57) Abstract: A housing (10) for a braking system (56) comprises a casing (12) defining a cavity (14) for housing one or more friction pads (15). The casing (12) is composed of a plurality of separate walls including a circumferential wall (16), back wall (18), and a front wall (20). The circumferential wall (16) is provided with an internal fluid flow path (36) and a fluid inlet (38) and fluid outlet (40) which communicate with the fluid flow path (36). When a supply (45) of fluid is connected with the fluid inlet (38) and outlet (40) via a fluid circuit (43), fluid is circulated through the fluid flow path (36) to cool the housing (10).

WO 03/089803 A1

For two-letter codes and other abbreviations, refer to the "Guidance Notes on Codes and Abbreviations" appearing at the beginning of each regular issue of the PCT Gazette.