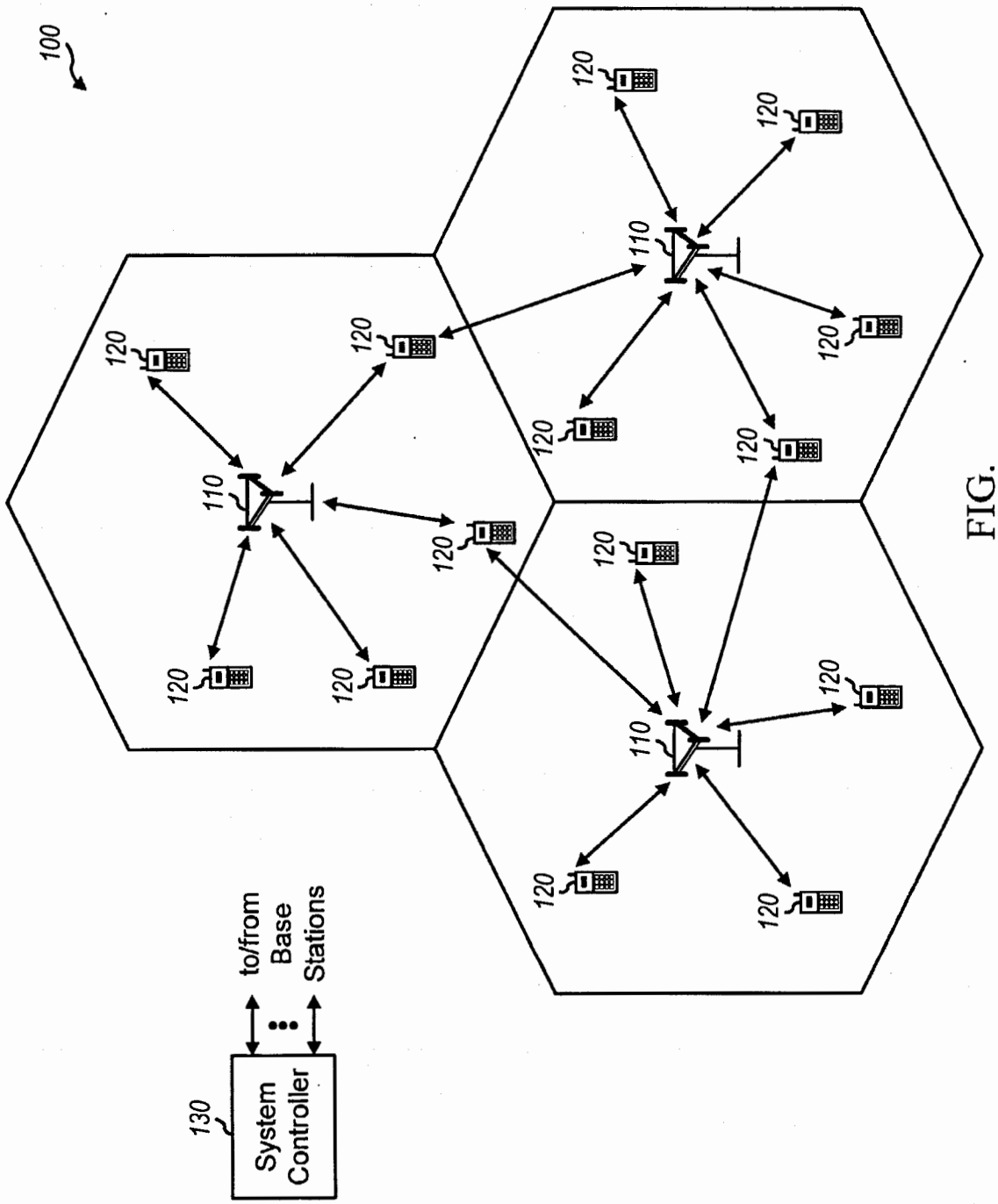

FIG. 1

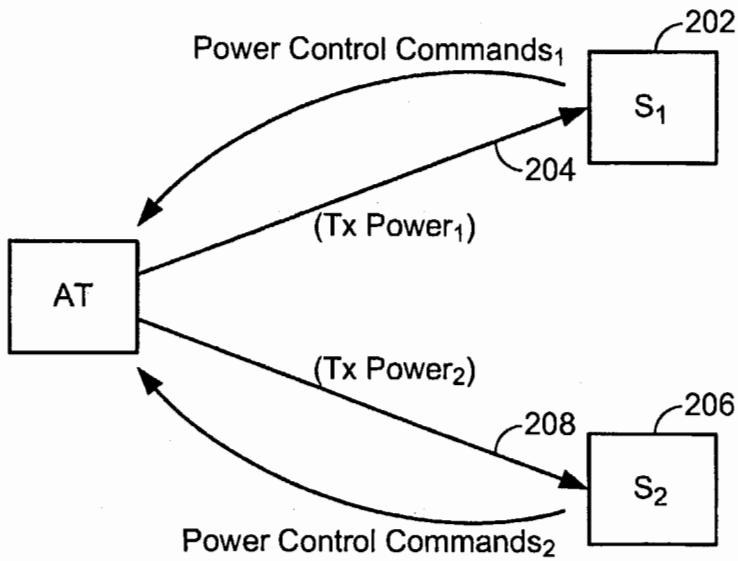
Power Control Commands1
202
S1
204
(Tx Power1)
AT
(Tx Power2)
208
206
S2
Power Control Commands2

FIG. 2

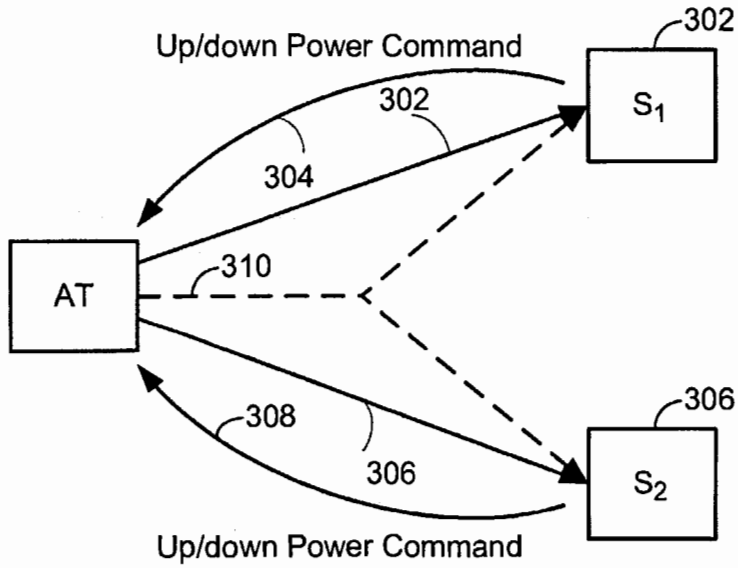
Up/down Power Command
302
S1
302
304
AT
310
308
306
306
S2
Up/down Power Command

FIG. 3

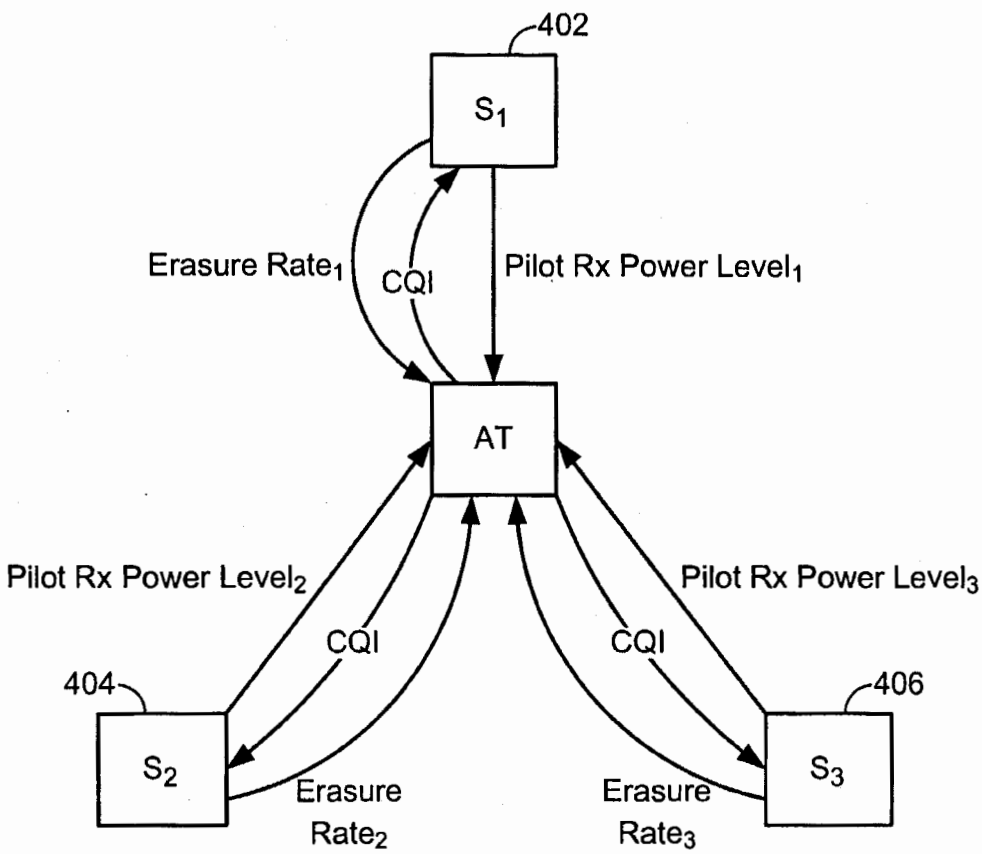
402
S_1
Erasure $Rate_1$
CQI
Pilot Rx $Power\ Level_1$
AT
Pilot Rx $Power\ Level_2$
CQI
CQI
Pilot Rx $Power\ Level_3$
404
406
S_2
S_3
Erasure $Rate_2$
Erasure $Rate_3$

FIG. 4

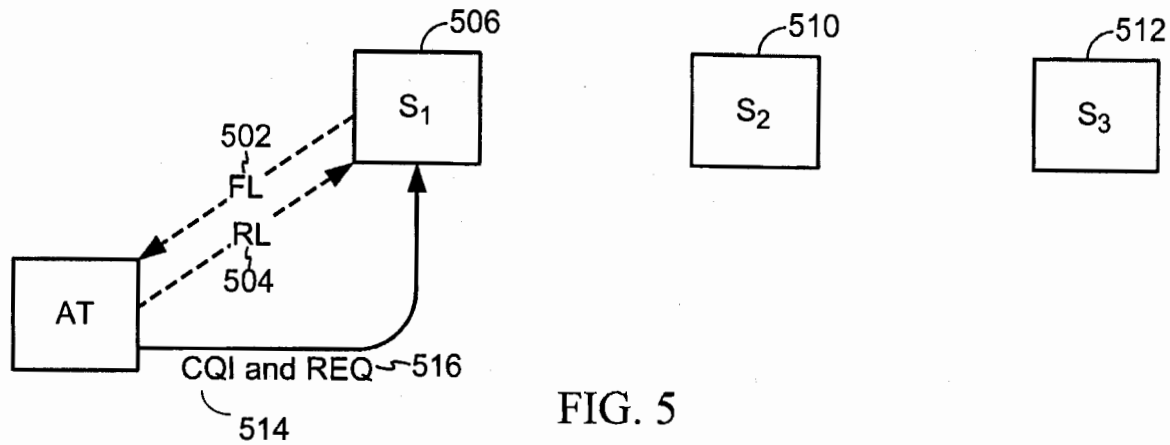

FIG. 5

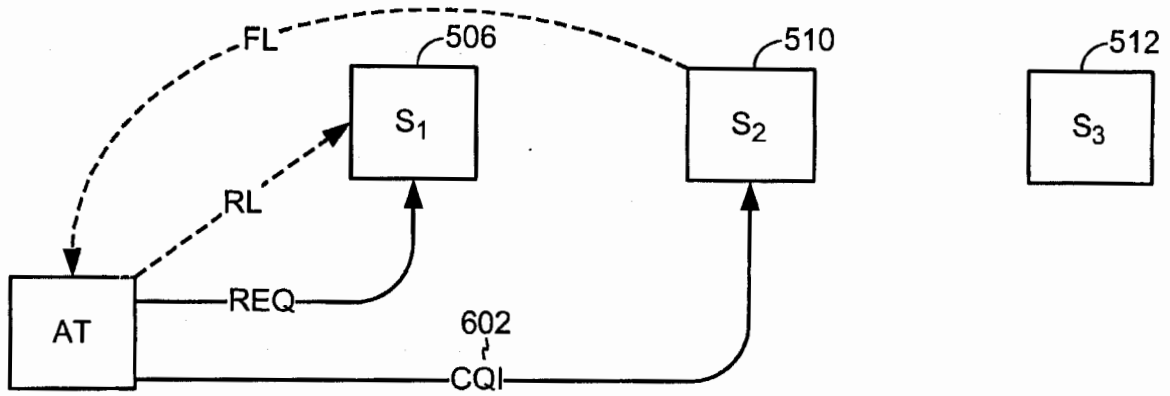

FIG. 6

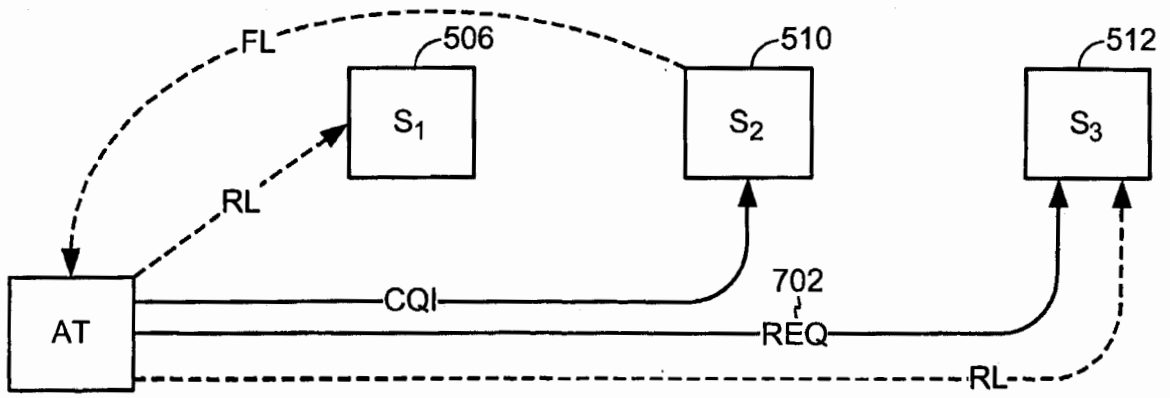

FIG. 7

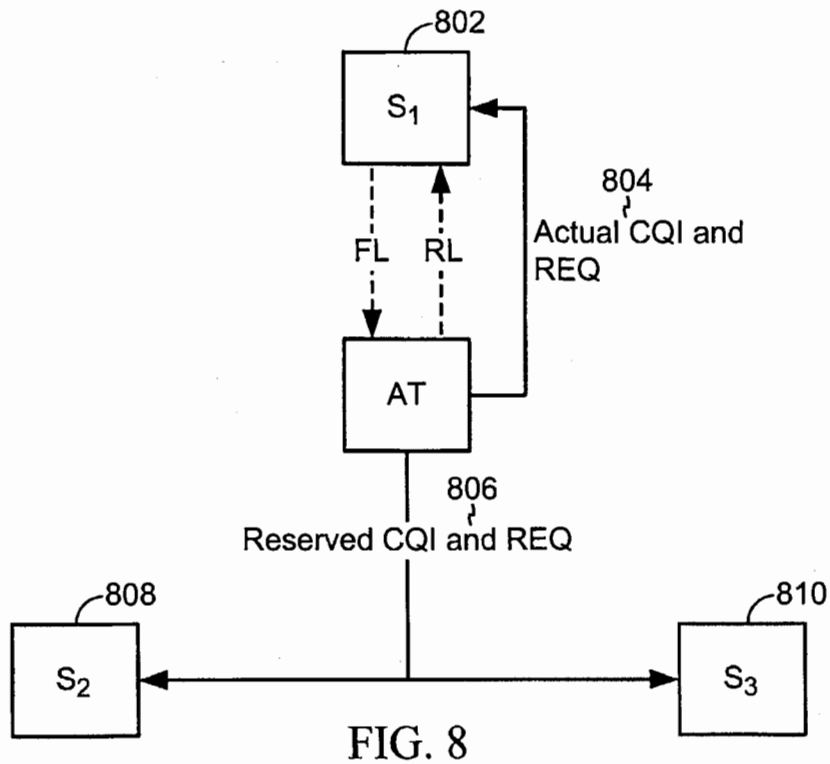
802
S_1
804
Actual CQI and REQ
FL
RL
AT
806
Reserved CQI and REQ
808
S_2
810
S_3

FIG. 8

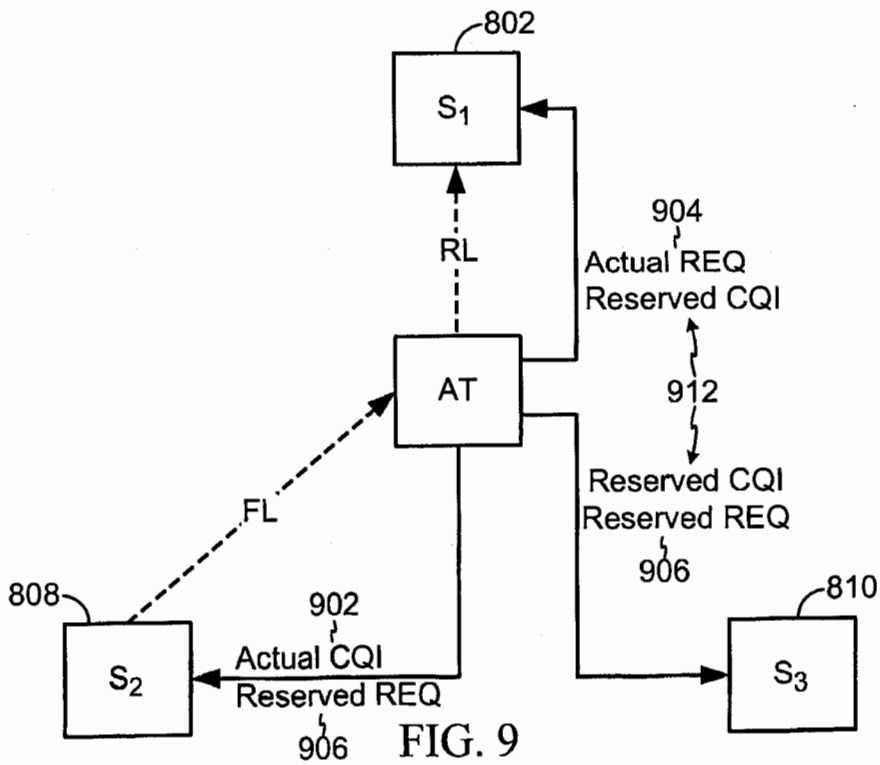
802
S_1
904
Actual REQ
Reserved CQI
RL
AT
912
FL
Reserved CQI
Reserved REQ
906
808
902
Actual CQI
Reserved REQ
906
S_2
810
S_3

FIG. 9

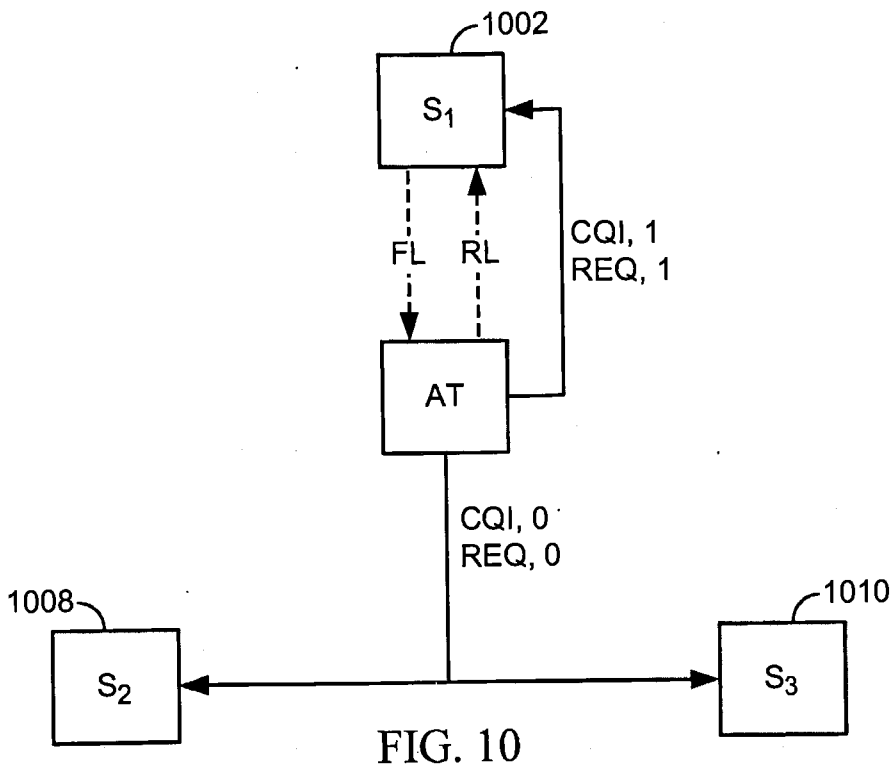
1002
S_1
FL
RL
CQI, 1
REQ, 1
AT
CQI, 0
REQ, 0
1008
S_2
1010
S_3

FIG. 10

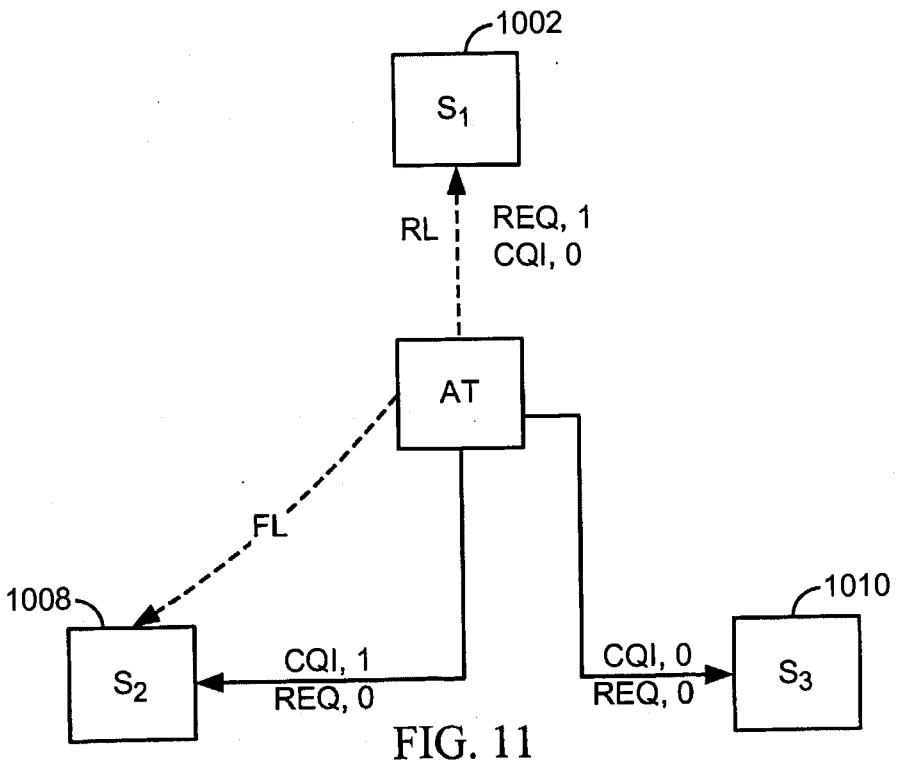
1002
S_1
RL
REQ, 1
CQI, 0
AT
FL
1008
S_2
CQI, 1
REQ, 0
CQI, 0
REQ, 0
1010
S_3

FIG. 11

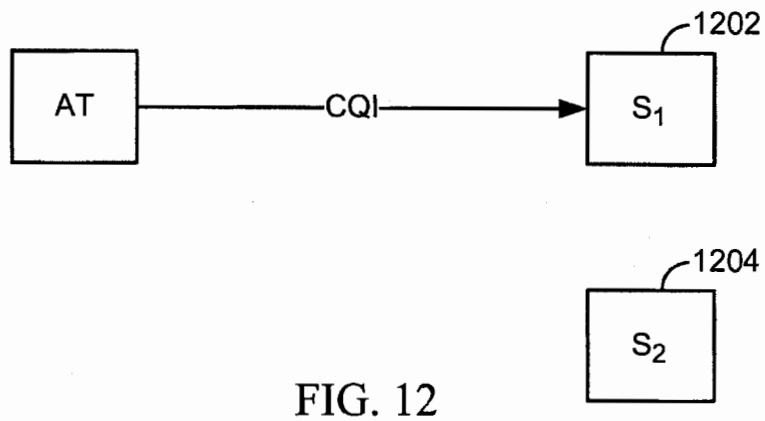

FIG. 12

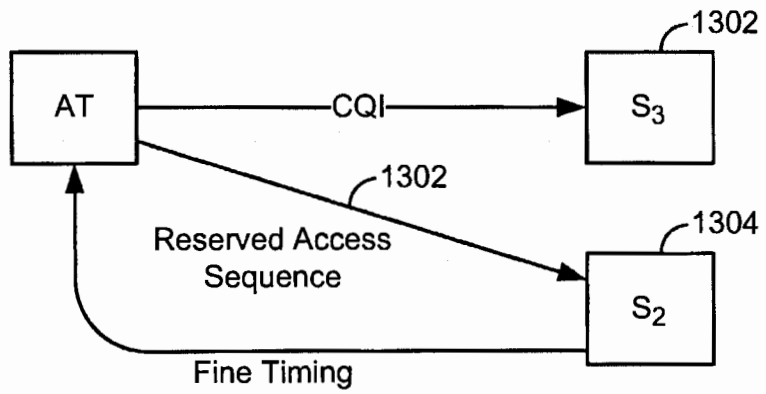

FIG. 13

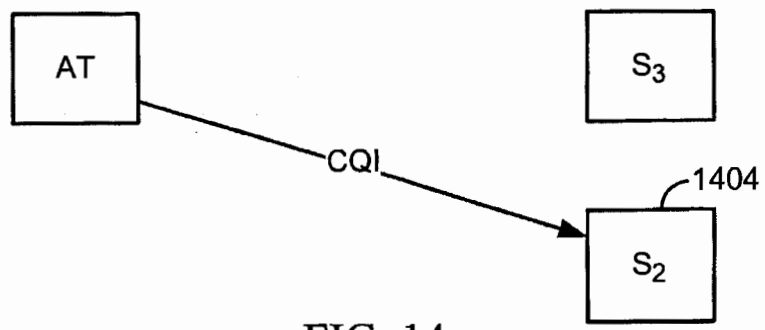

FIG. 14

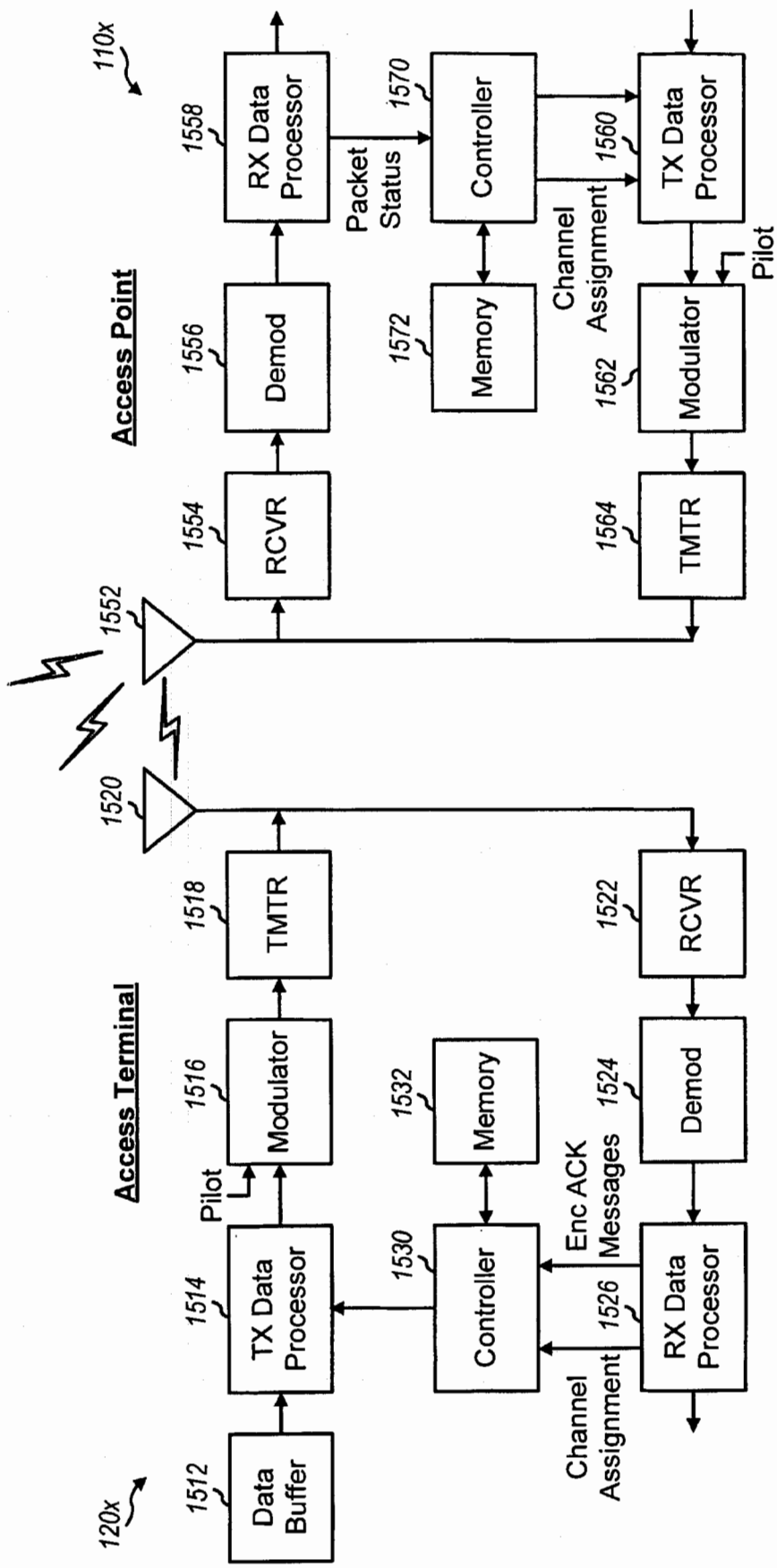
120x
1512
Data Buffer
1514
TX Data Processor
1516
Modulator
1518
TMTR
Access Terminal
Pilot
1530
Controller
1532
Memory
Channel Assignment
Enc ACK Messages
1526
RX Data Processor
1524
Demod
1522
RCVR
1520
1552
1554
RCVR
1556
Demod
1558
RX Data Processor
Access Point
110x
Packet Status
1570
Controller
1572
Memory
Channel Assignment
1560
TX Data Processor
1562
Modulator
Pilot
1564
TMTR

FIG. 15