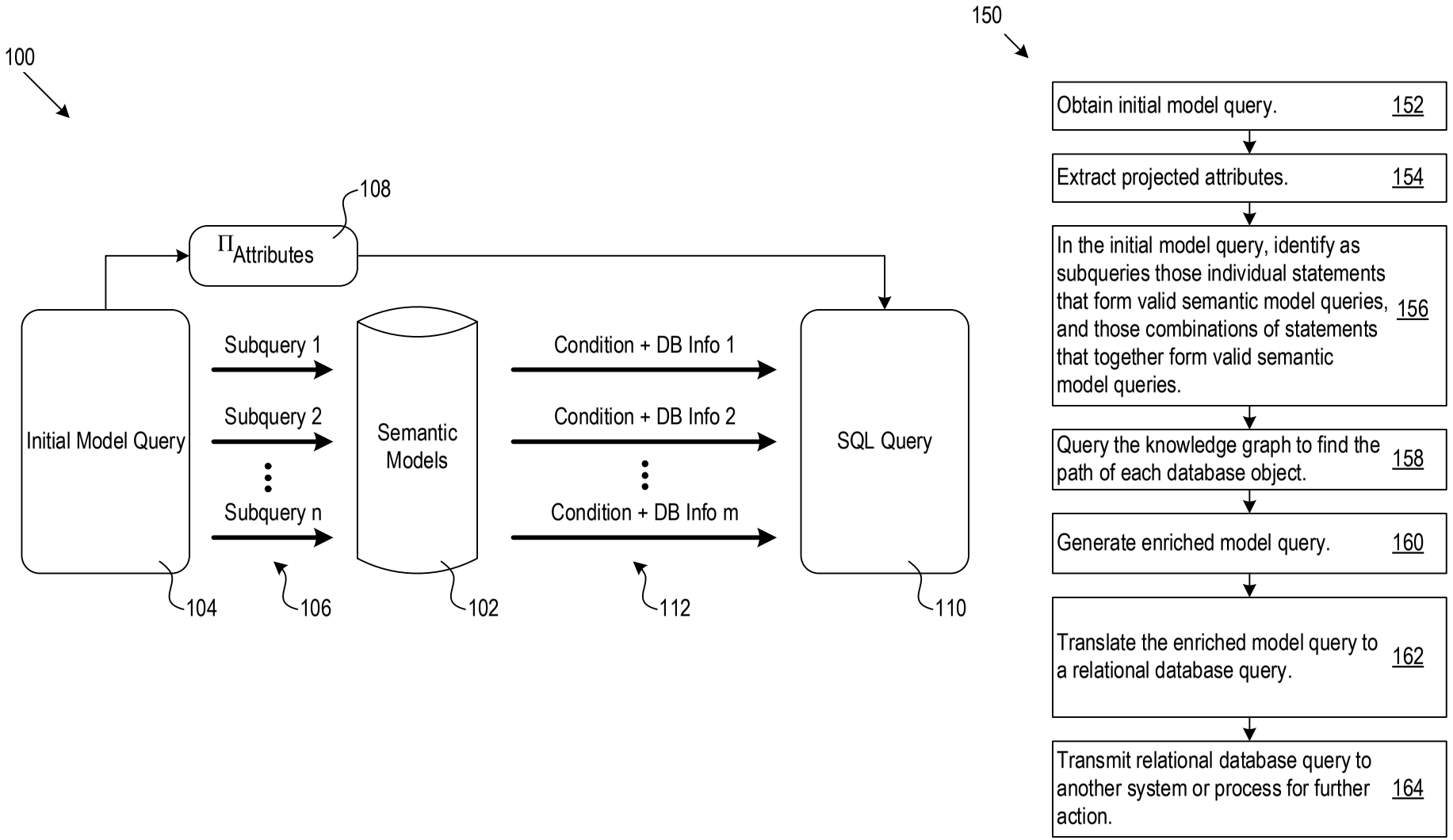
100
108
$\Pi_{Attributes}$
Initial Model Query
Subquery 1
Subquery 2
Subquery n
Semantic Models
Condition + DB Info 1
Condition + DB Info 2
Condition + DB Info m
SQL Query
104
106
102
112
110
150
Obtain initial model query. 152
Extract projected attributes. 154
In the initial model query, identify as subqueries those individual statements that form valid semantic model queries, and those combinations of statements that together form valid semantic model queries. 156
Query the knowledge graph to find the path of each database object. 158
Generate enriched model query. 160
Translate the enriched model query to a relational database query. 162
Transmit relational database query to another system or process for further action. 164

Figure 1

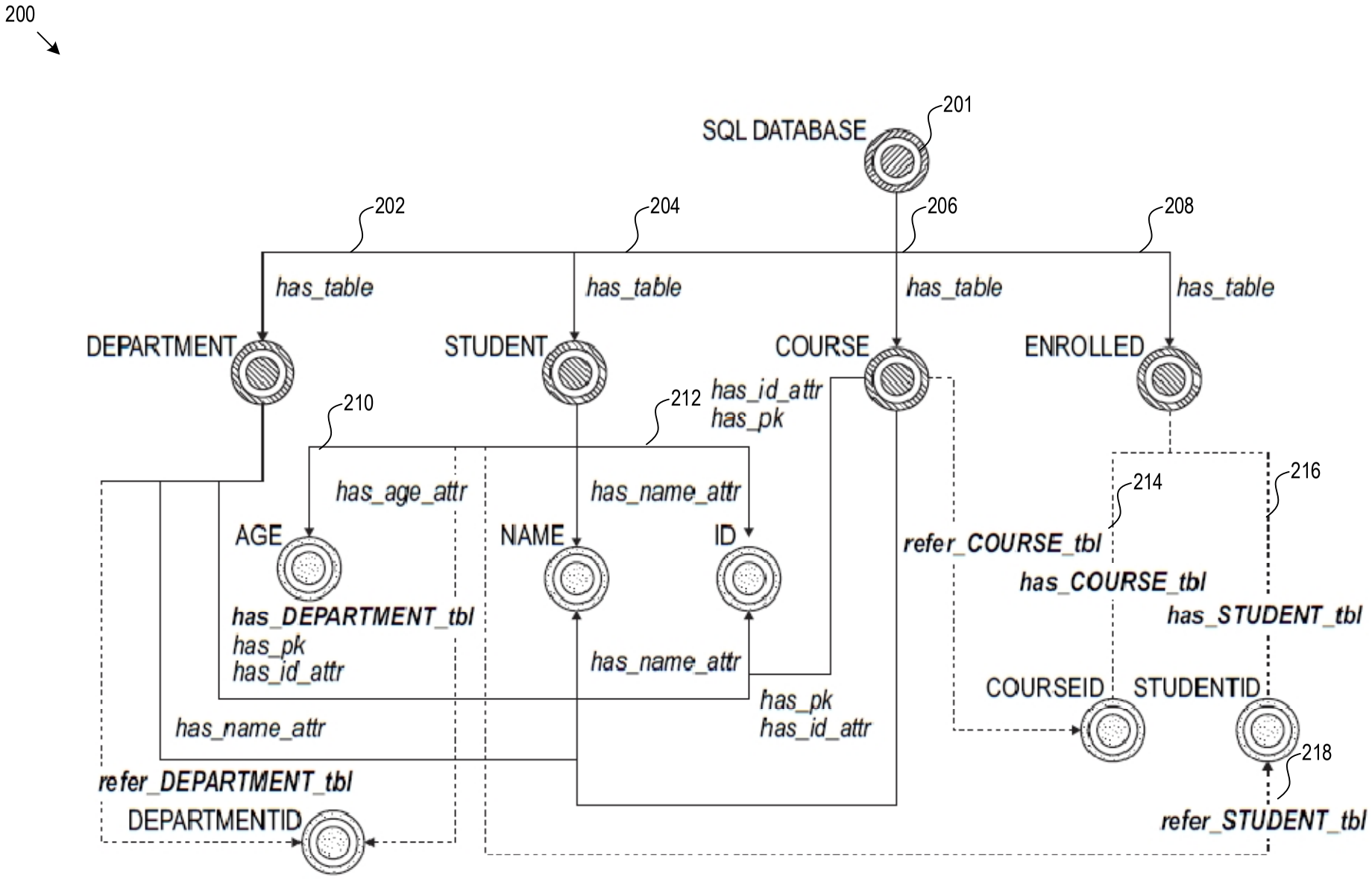
200
SQL DATABASE
201
202
204
206
208
has_table
has_table
has_table
has_table
DEPARTMENT
STUDENT
COURSE
ENROLLED
210
212
has_id_attr
has_pk
214
216
has_age_attr
has_name_attr
AGE
NAME
ID
refer_COURSE_tbl
has_COURSE_tbl
has_STUDENT_tbl
has_DEPARTMENT_tbl
has_pk
has_id_attr
has_name_attr
has_pk
has_id_attr
COURSEID
STUDENTID
has_name_attr
218
refer_DEPARTMENT_tbl
DEPARTMENTID
refer_STUDENT_tbl

Figure 2

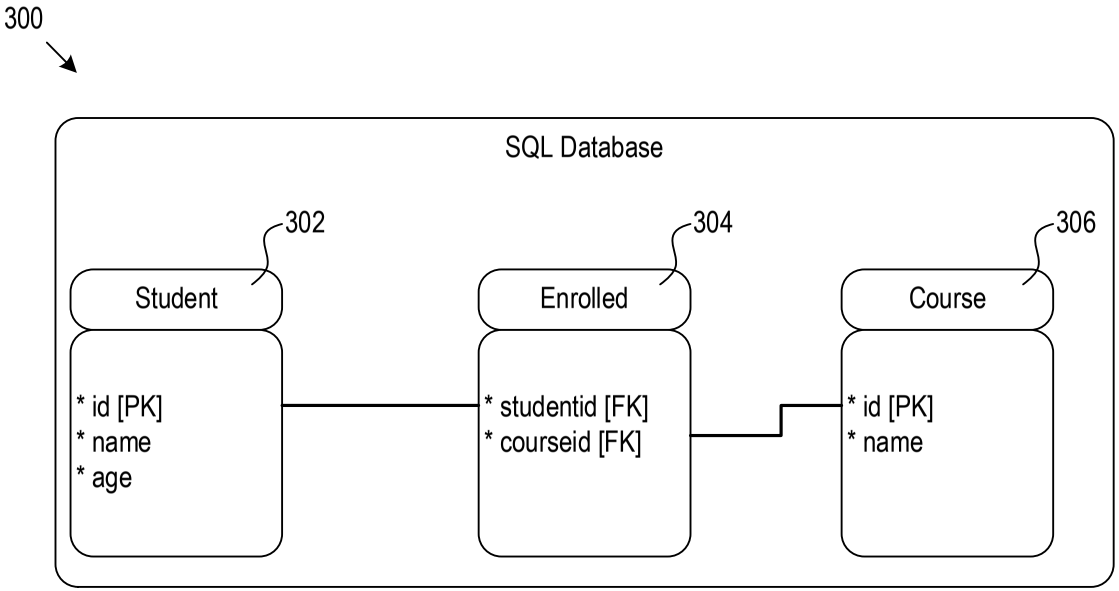
300
SQL Database
302
Student
* id [PK]
* name
* age
304
Enrolled
* studentid [FK]
* courseid [FK]
306
Course
* id [PK]
* name

Figure 3

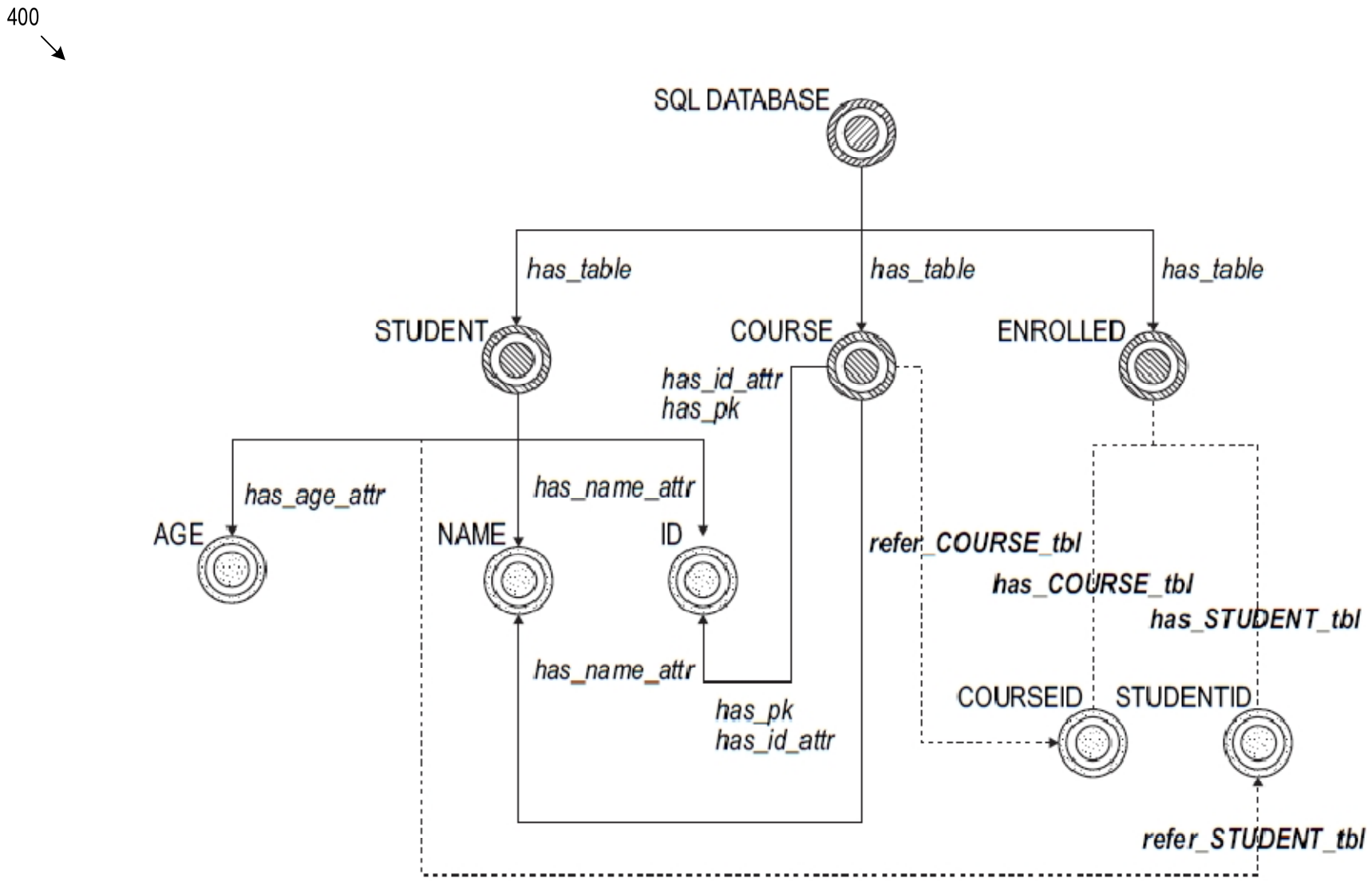
400
SQL DATABASE
has_table
has_table
has_table
STUDENT
COURSE
ENROLLED
has_id_attr
has_pk
has_age_attr
has_name_attr
AGE
NAME
ID
refer_COURSE_tbl
has_COURSE_tbl
has_STUDENT_tbl
has_name_attr
has_pk
has_id_attr
COURSEID
STUDENTID
refer_STUDENT_tbl

Figure 4

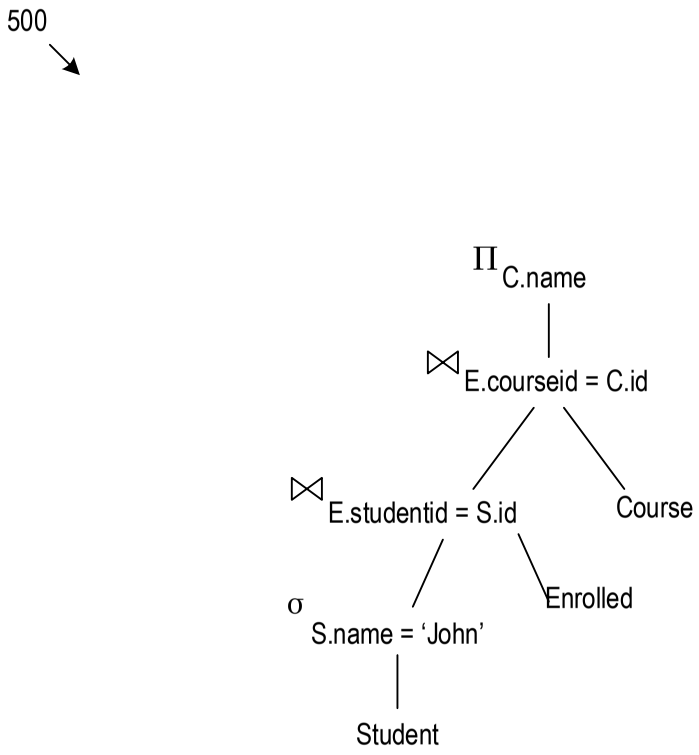
500
Π C.name
⋈ E.courseid = C.id
⋈ E.studentid = S.id
Course
σ S.name = 'John'
Enrolled
Student

Figure 5

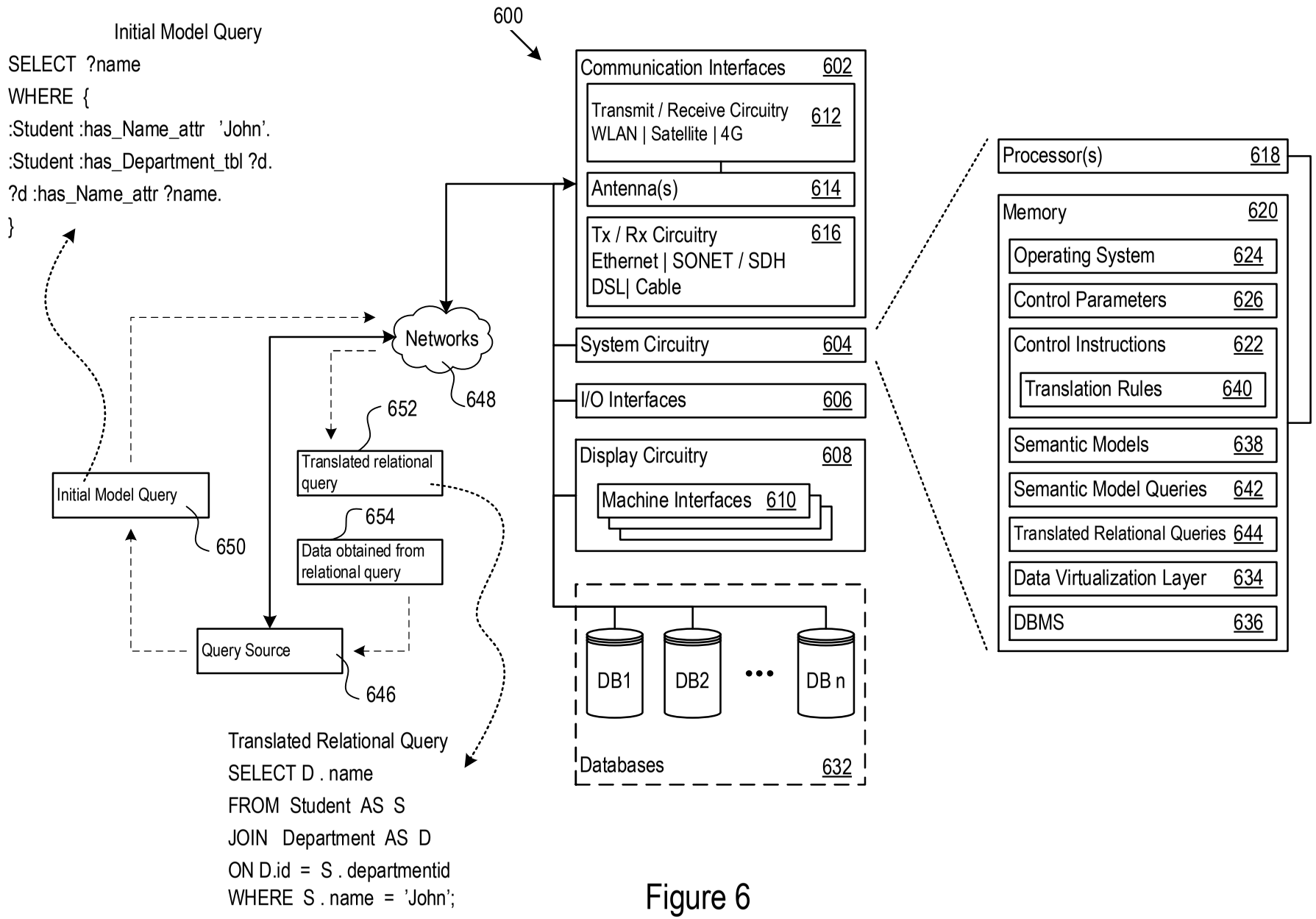
Initial Model Query
SELECT ?name
WHERE {
:Student :has_Name_attr 'John'.
:Student :has_Department_tbl ?d.
?d :has_Name_attr ?name.
}
600
Communication Interfaces 602
Transmit / Receive Circuitry WLAN | Satellite | 4G 612
Antenna(s) 614
Tx / Rx Circuitry Ethernet | SONET / SDH DSL| Cable 616
System Circuitry 604
I/O Interfaces 606
Display Circuitry 608
Machine Interfaces 610
Databases 632
DB1
DB2
DB n
Processor(s) 618
Memory 620
Operating System 624
Control Parameters 626
Control Instructions 622
Translation Rules 640
Semantic Models 638
Semantic Model Queries 642
Translated Relational Queries 644
Data Virtualization Layer 634
DBMS 636
Networks
648
652
Translated relational query
654
Data obtained from relational query
Initial Model Query
650
Query Source
646
Translated Relational Query
SELECT D . name
FROM Student AS S
JOIN Department AS D
ON D.id = S . departmentid
WHERE S . name = 'John';

Figure 6