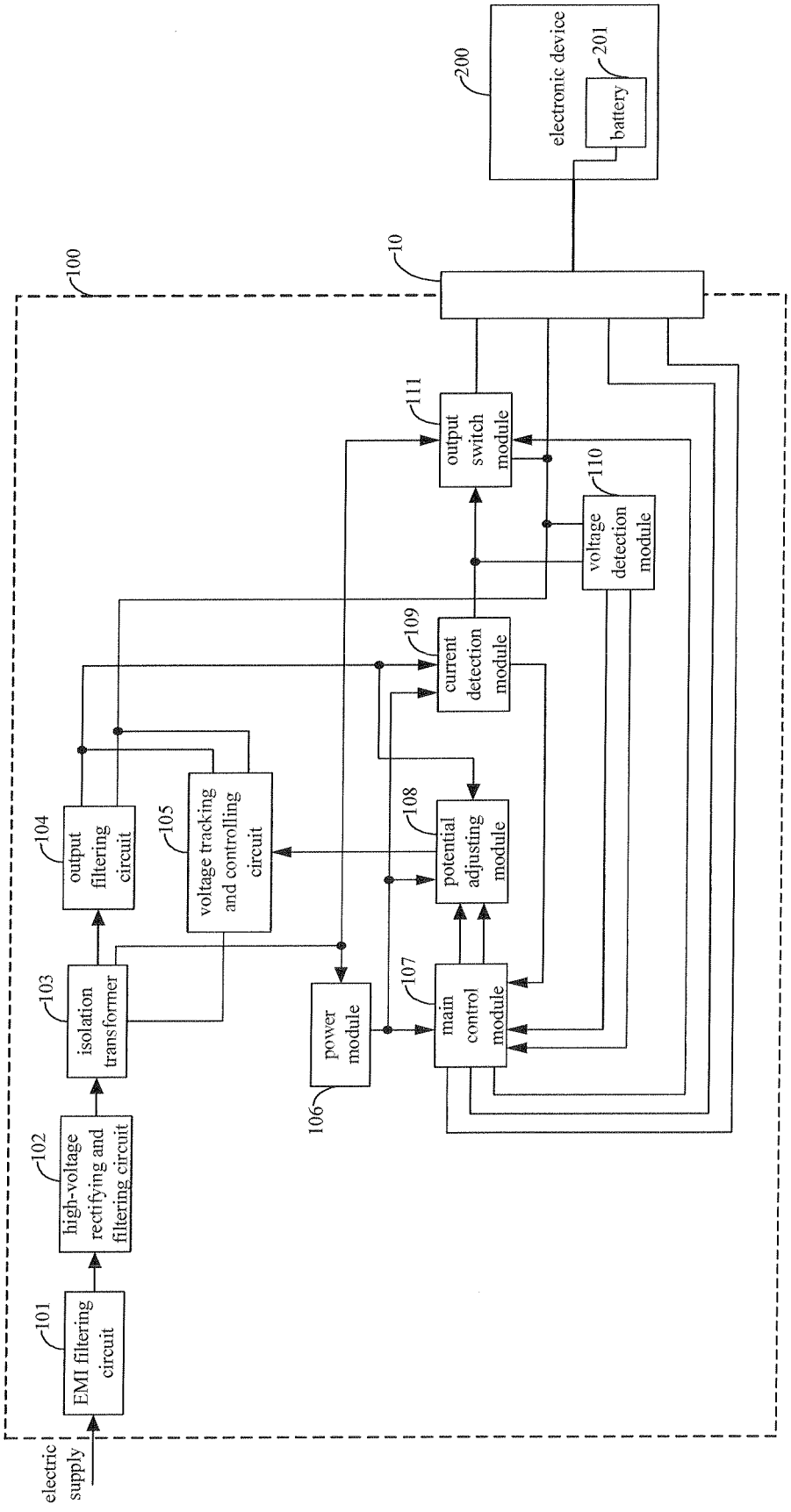
electric supply
100
101
EMI filtering circuit
102
high-voltage rectifying and filtering circuit
103
isolation transformer
104
output filtering circuit
105
voltage tracking and controlling circuit
106
power module
107
main control module
108
potential adjusting module
109
current detection module
110
voltage detection module
111
output switch module
10
200
electronic device
201
battery

Fig. 1

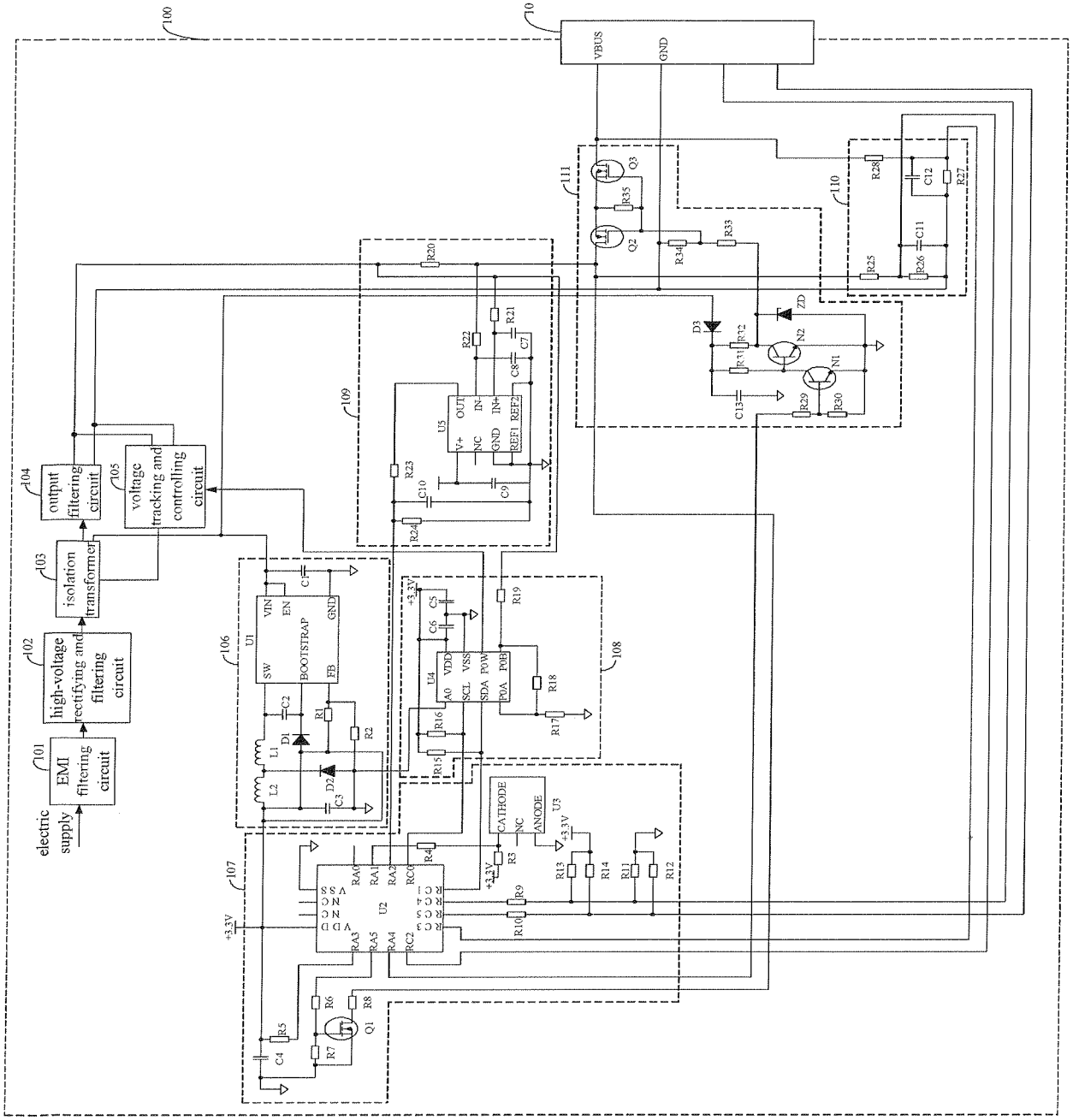
100
10
VBUS
GND
111
110
109
104
output filtering circuit
105
voltage tracking and controlling circuit
103
isolation transformer
102
high-voltage rectifying and filtering circuit
101
EMI filtering circuit
electric supply
106
107
108
U1
U2
U3
U4
U5
Q1
Q2
Q3
D1
D2
D3
ZD
N1
N2
L1
L2
VIN
EN
GND
SW
BOOTSTRAP
FB
VDD
VSS
SCL
SDA
A0
P0W
P0B
P0A
OUT1
IN-
IN+
V+
NC
REF1
REF2
CATHODE
ANODE
+3.3V
R1
R2
R3
R4
R5
R6
R7
R8
R9
R10
R11
R12
R13
R14
R15
R16
R17
R18
R19
R20
R21
R22
R23
R24
R25
R26
R27
R28
R29
R30
R31
R32
R33
R34
R35
C1
C2
C3
C4
C5
C6
C7
C8
C9
C10
C11
C12
C13

Fig. 2