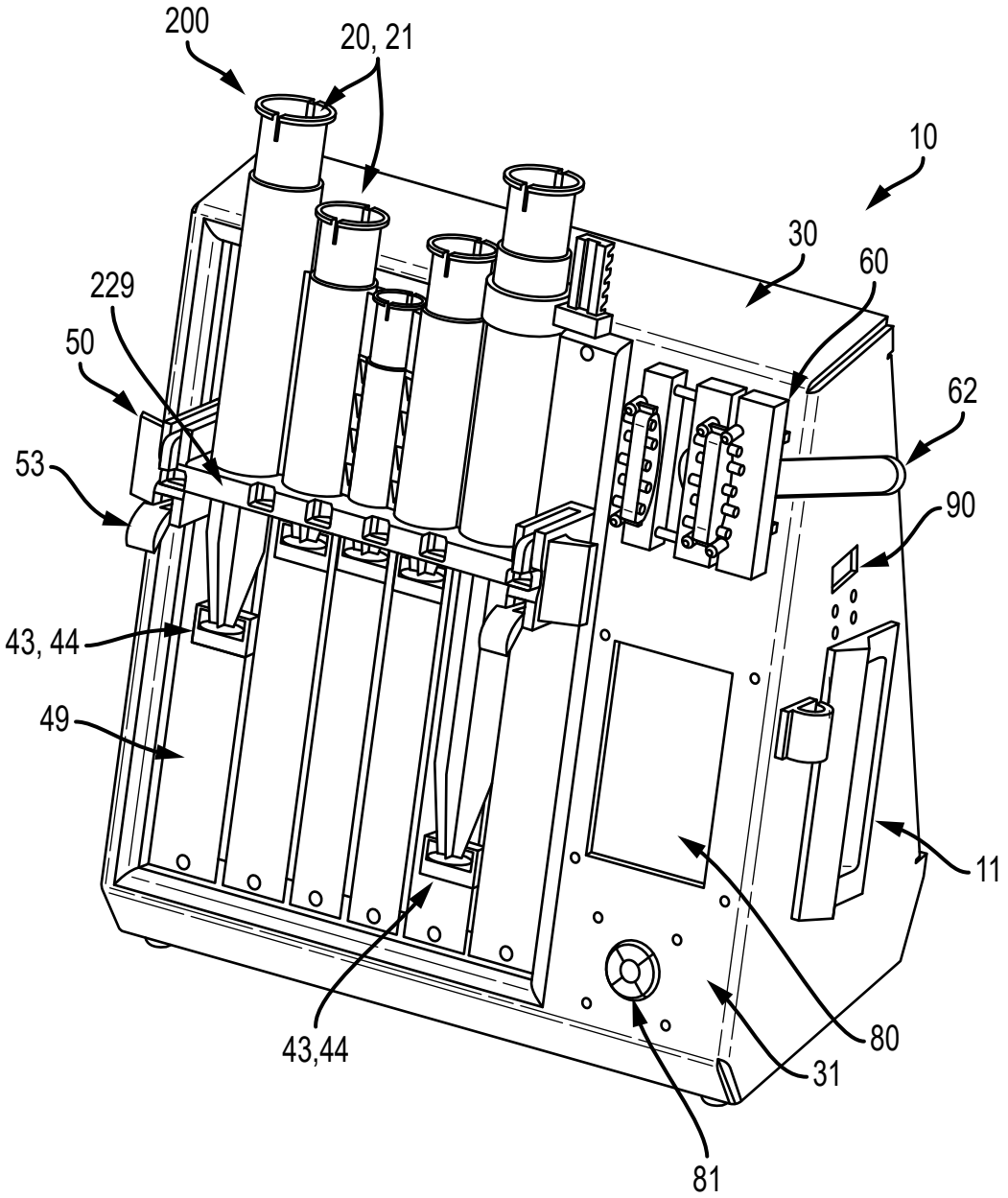

FIG.1

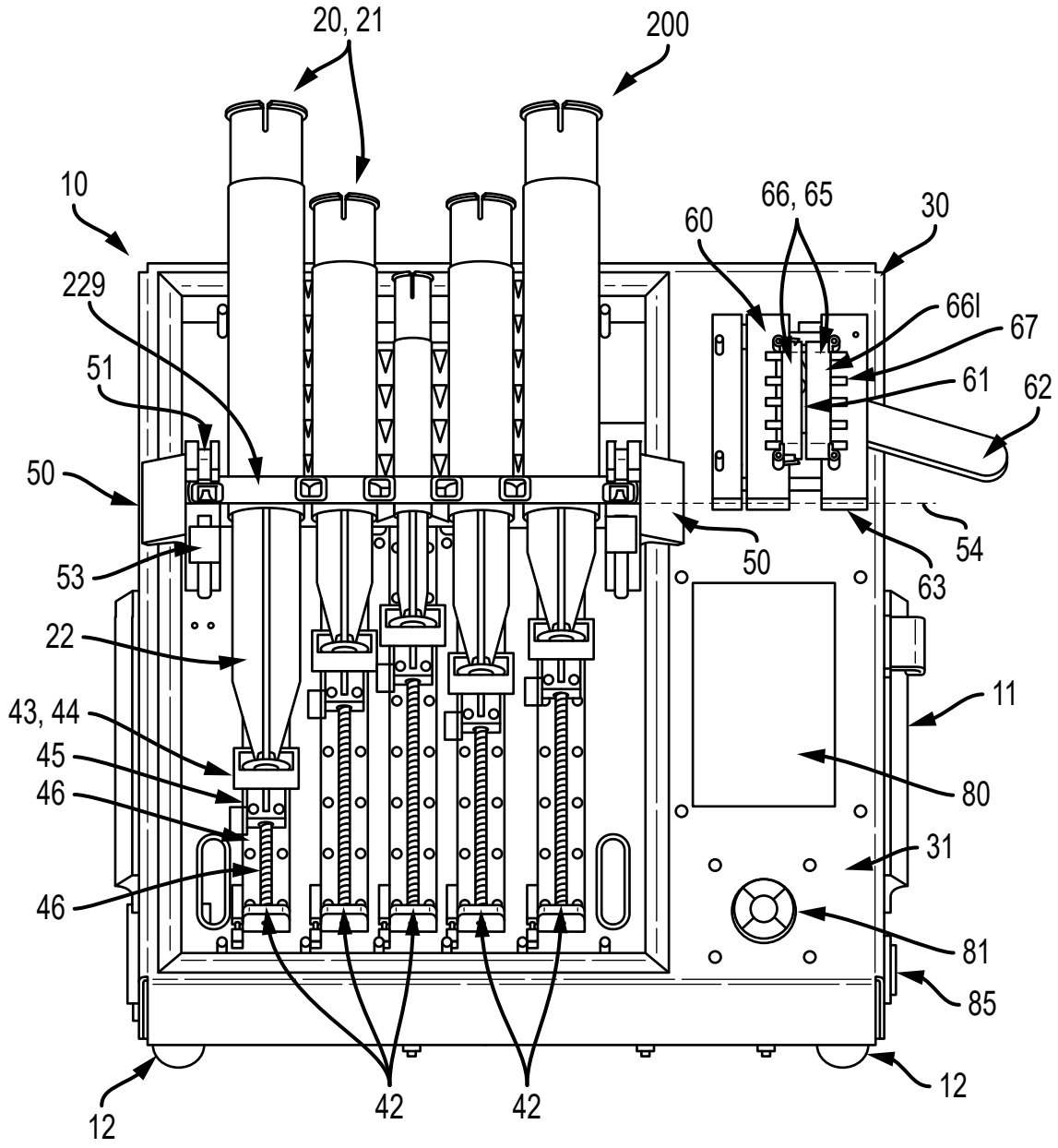
20, 21
200
10
66, 65
30
60
229
66l
67
51
61
62
50
54
50
53
63
22
11
43, 44
80
45
46
31
46
81
85
42
42
12
12

FIG.2

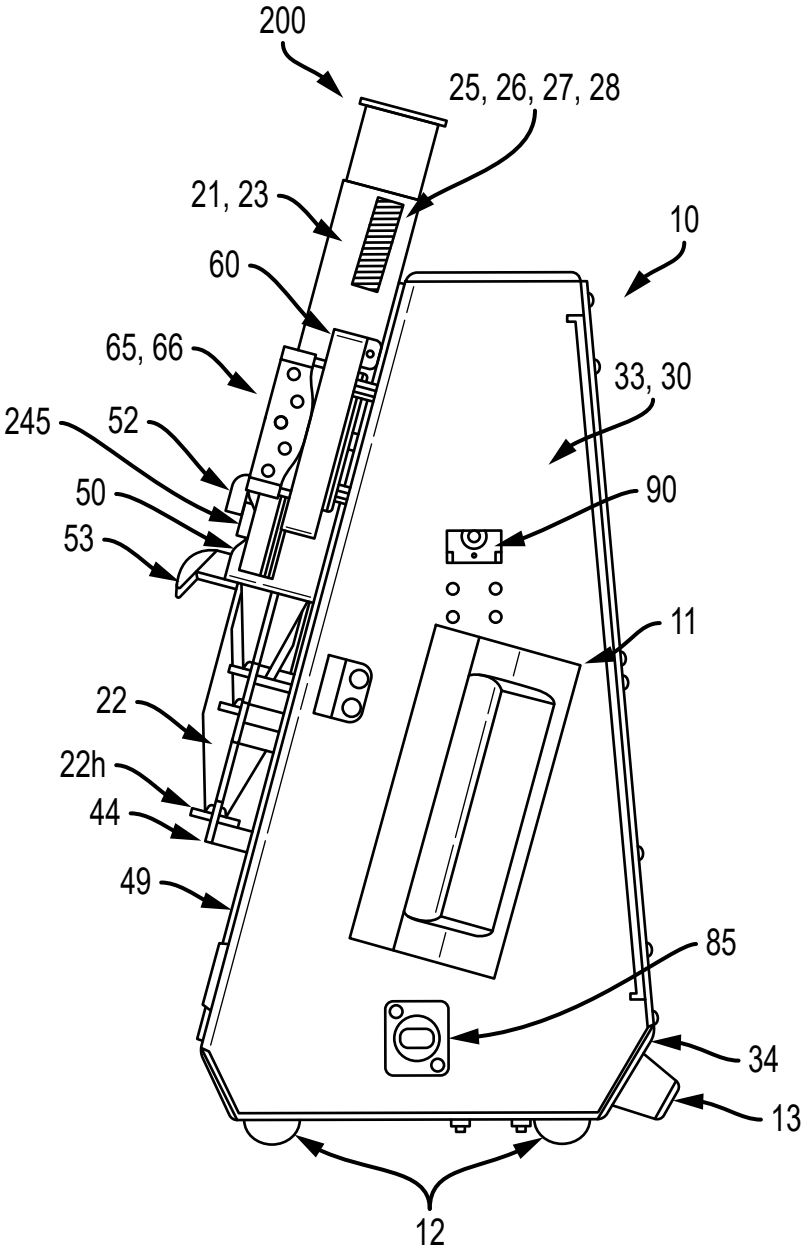
200
25, 26, 27, 28
21, 23
10
60
65, 66
33, 30
245
52
90
50
53
11
22
22h
44
49
85
34
13
12

FIG.3a

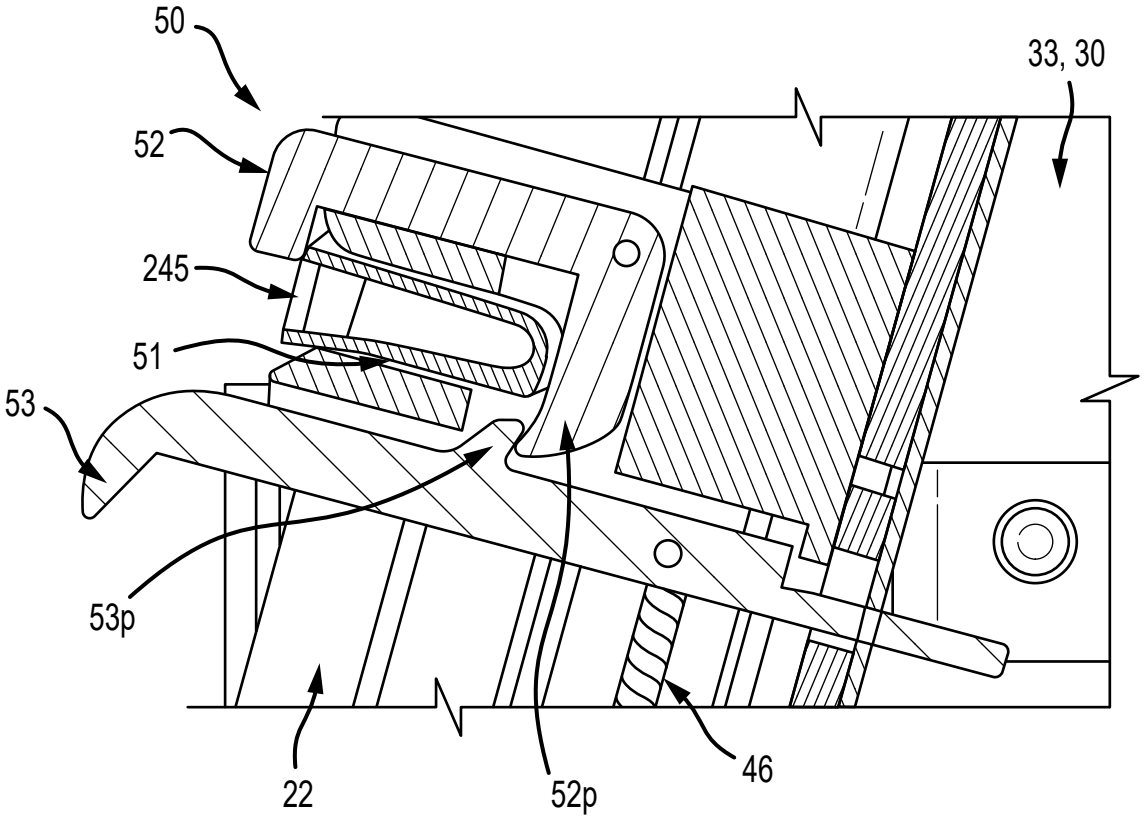

FIG.3b

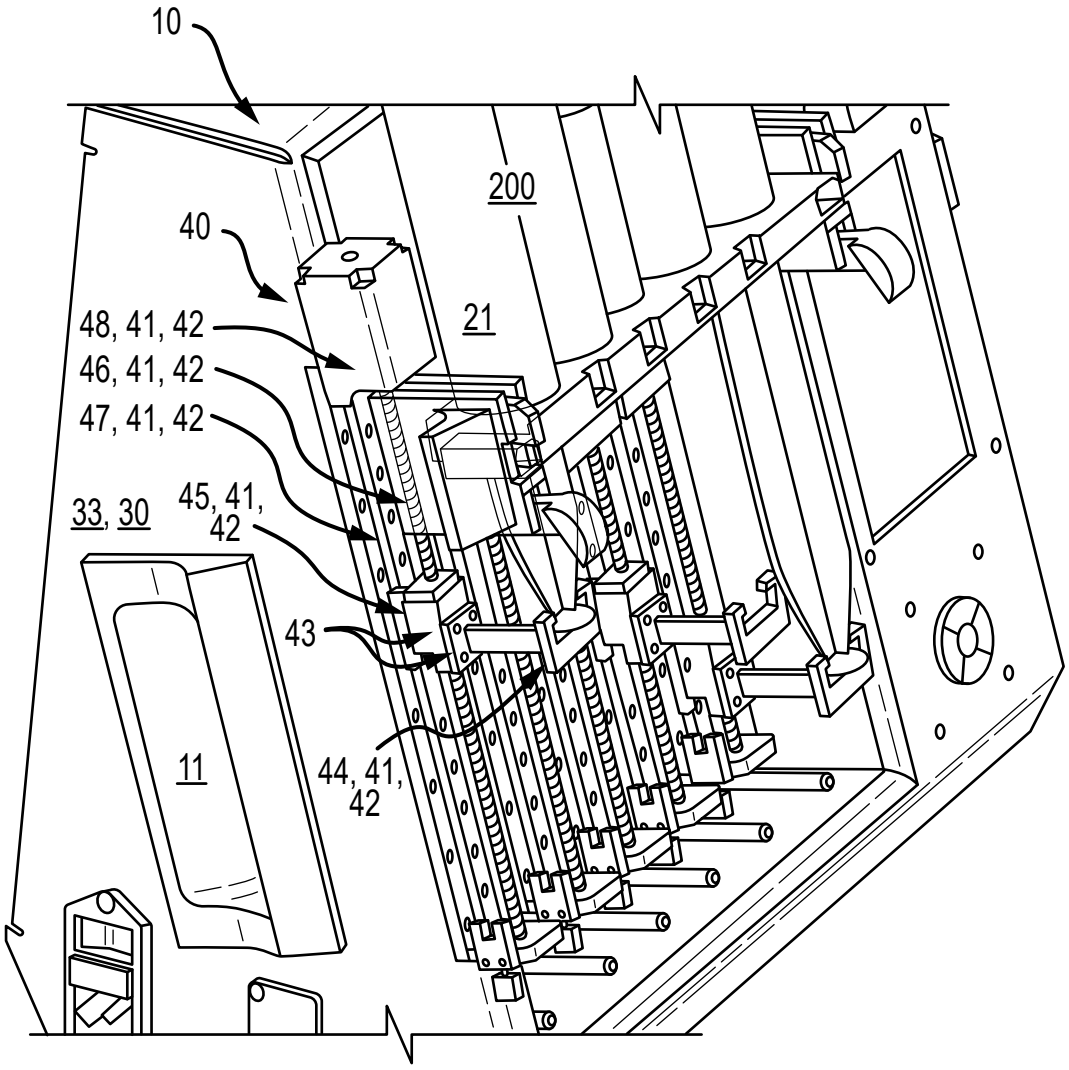

FIG.4a

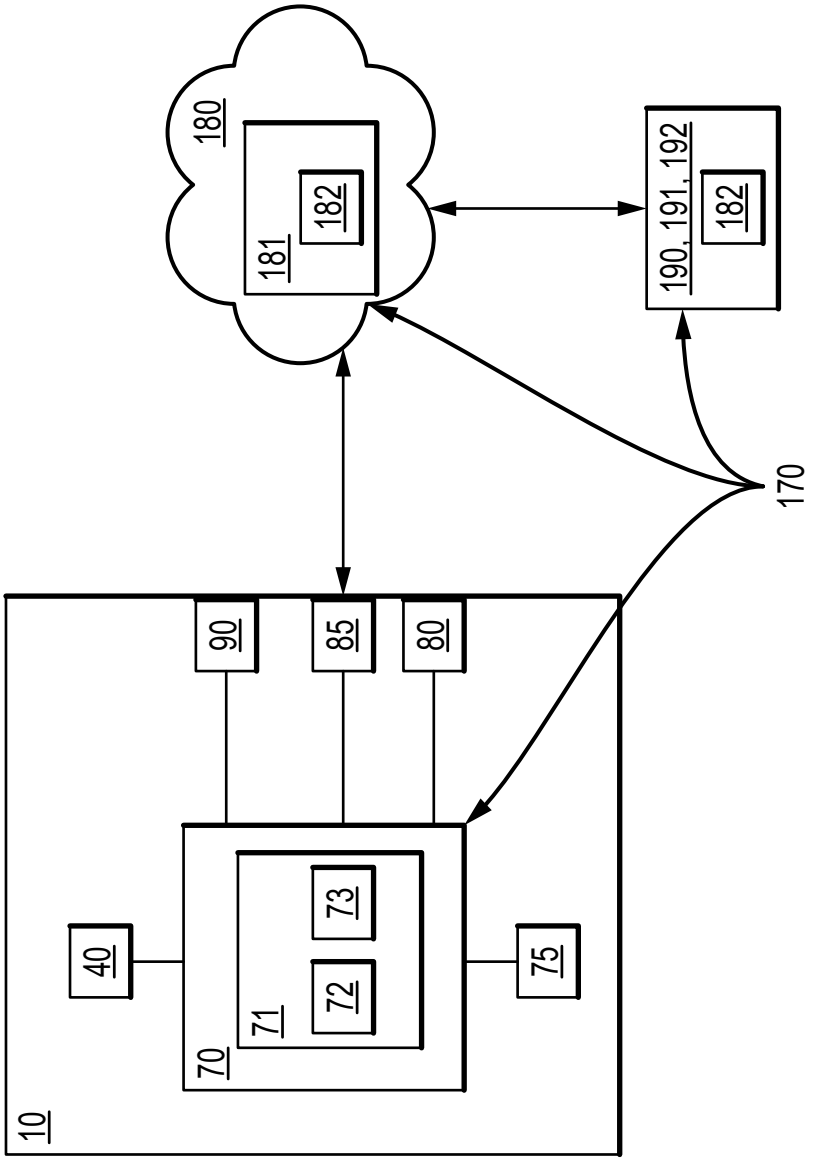

FIG.4b

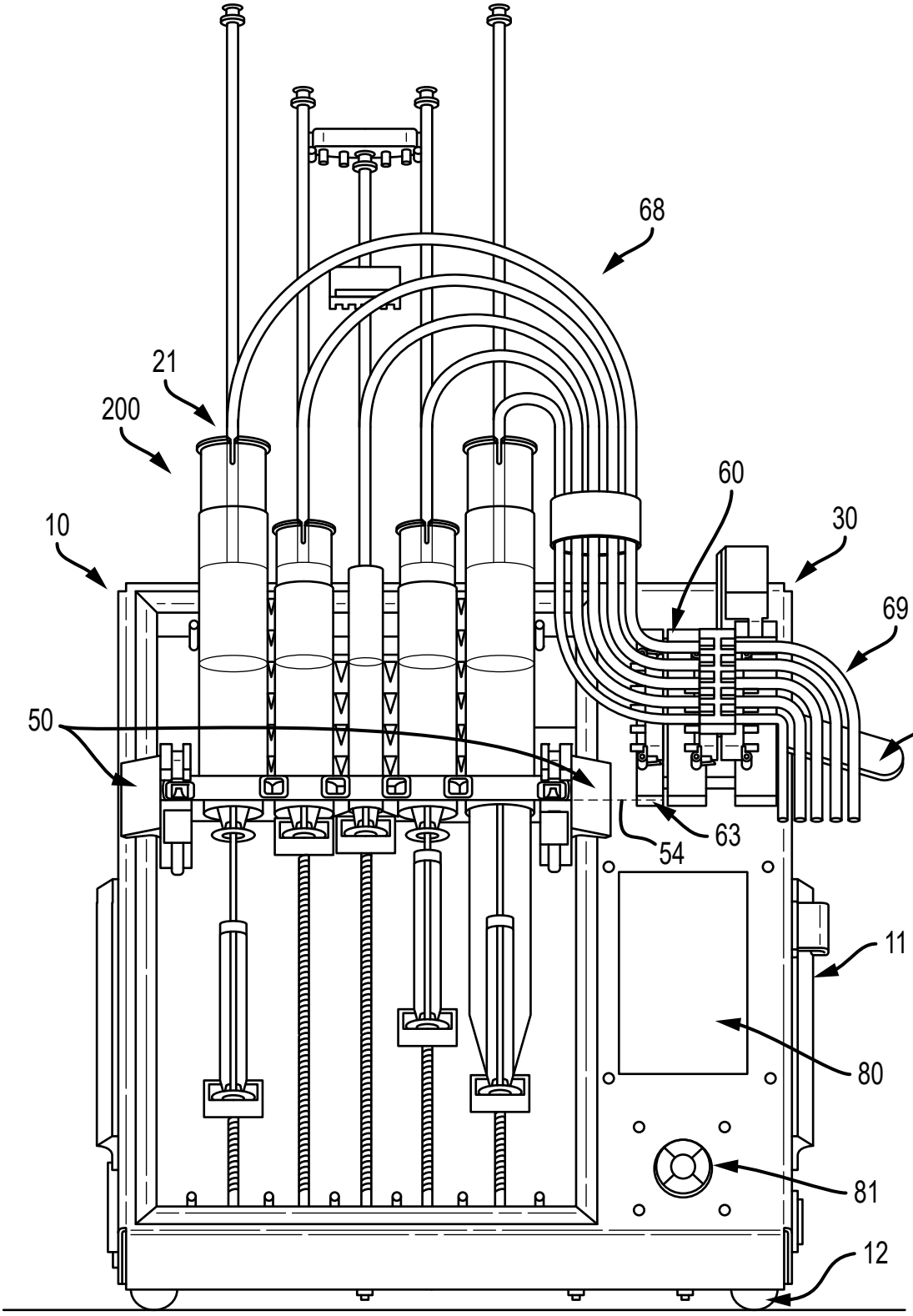

FIG.5

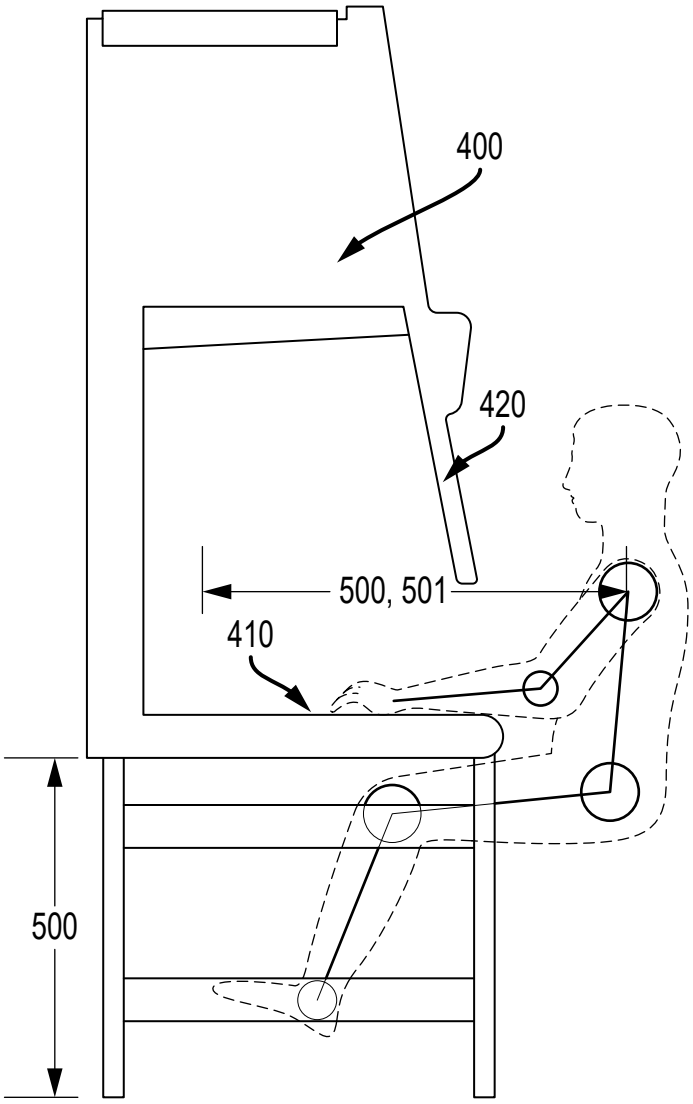

FIG.6a

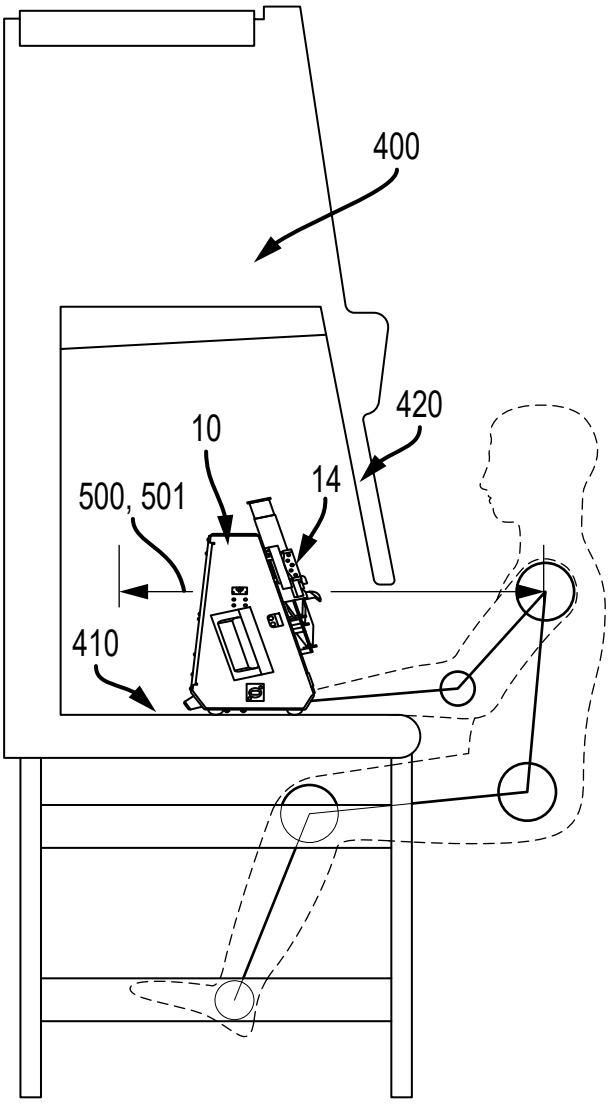

FIG.6b

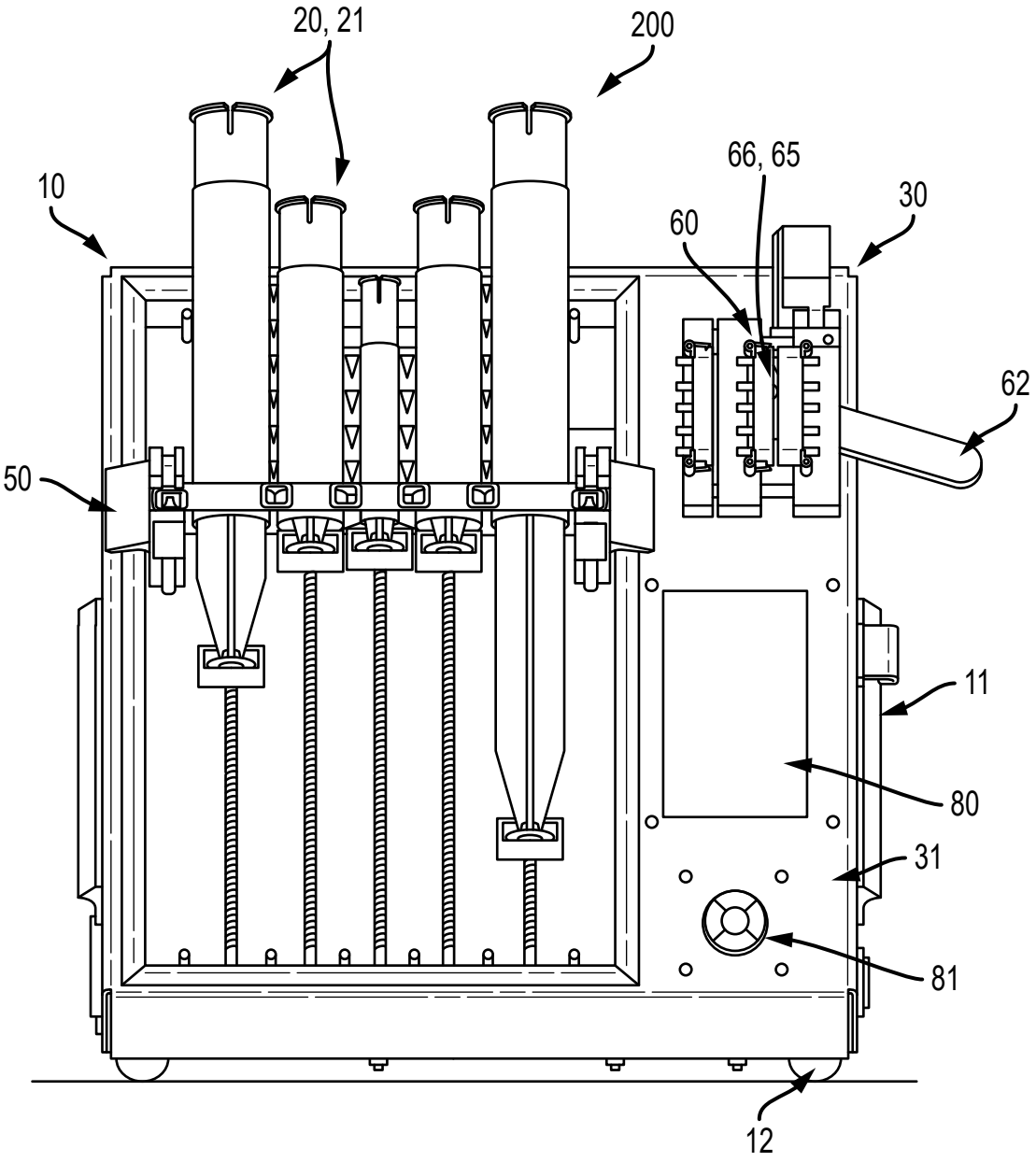

FIG.7

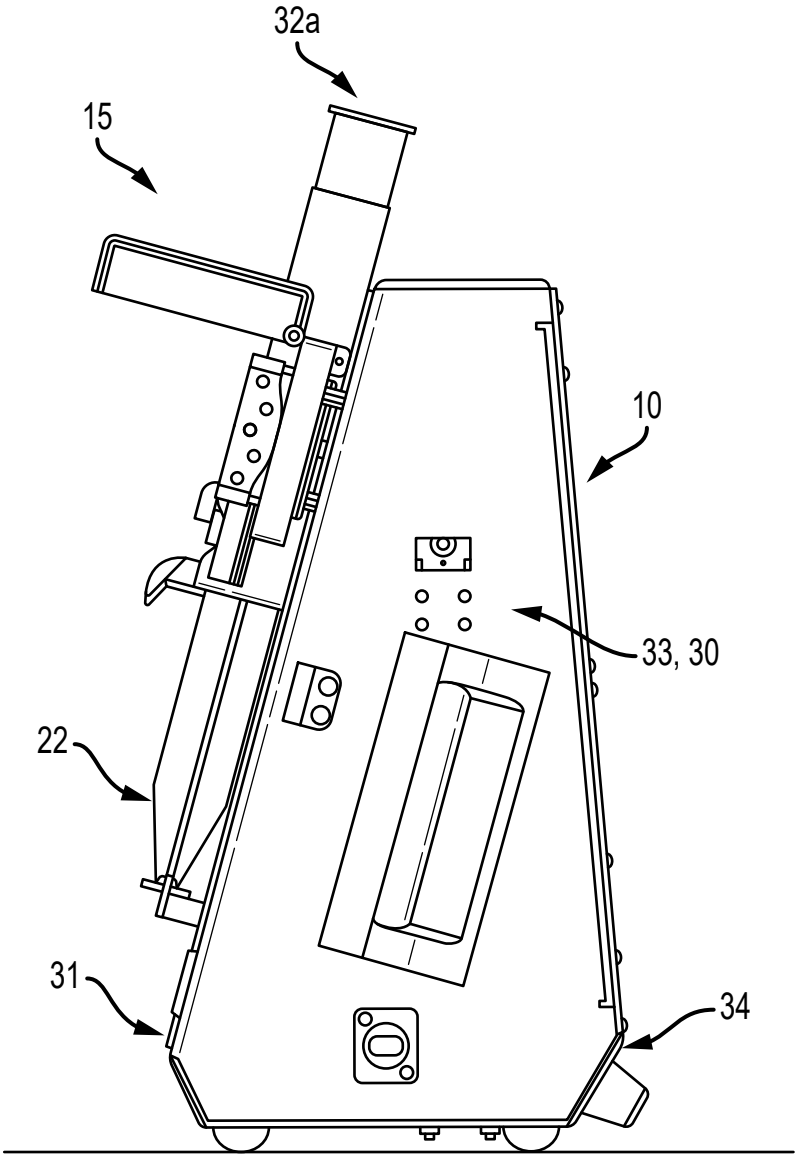

FIG.8

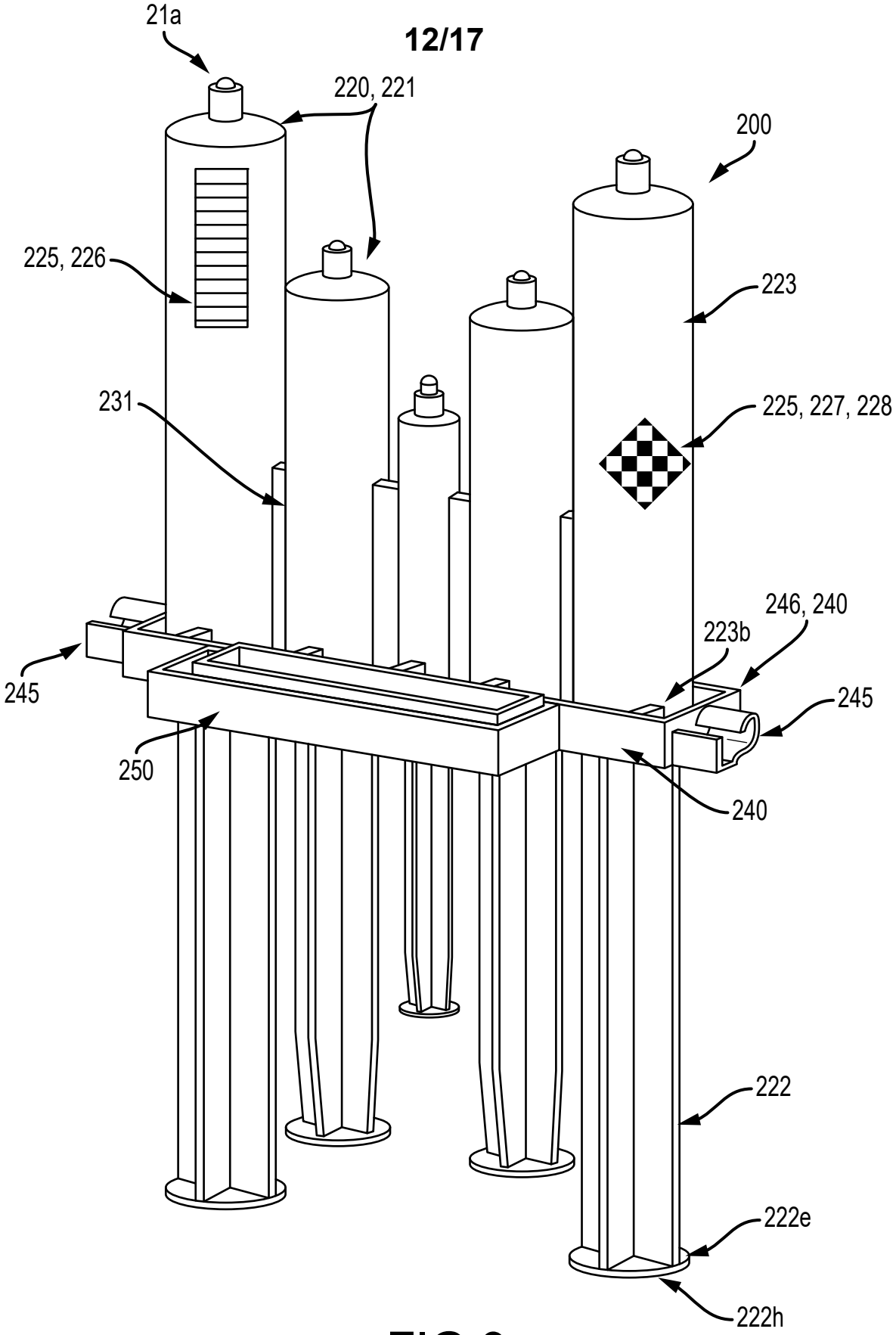
21a
220, 221
200
225, 226
223
231
225, 227, 228
246, 240
223b
245
245
250
240
222
222e
222h

FIG.9

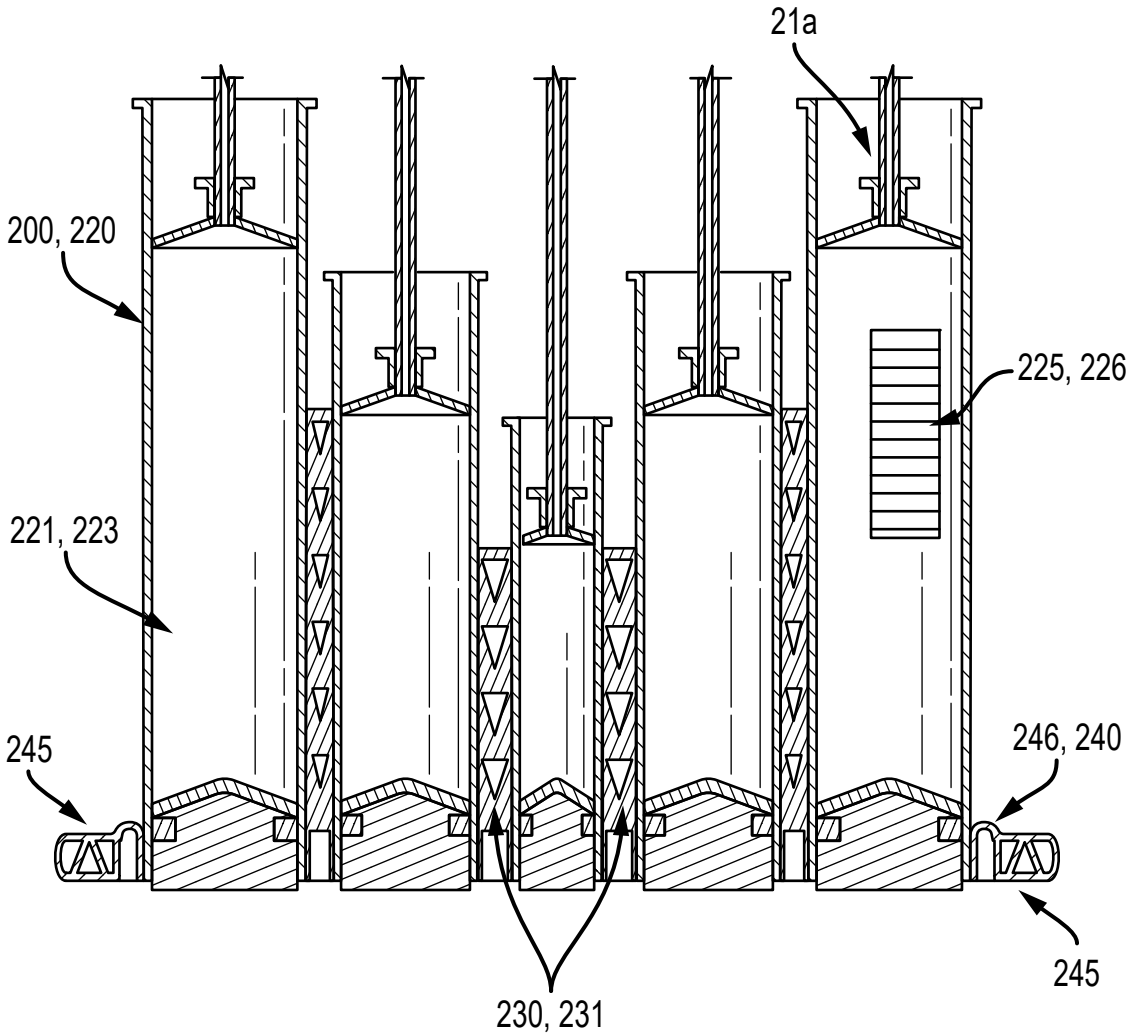

FIG.10a

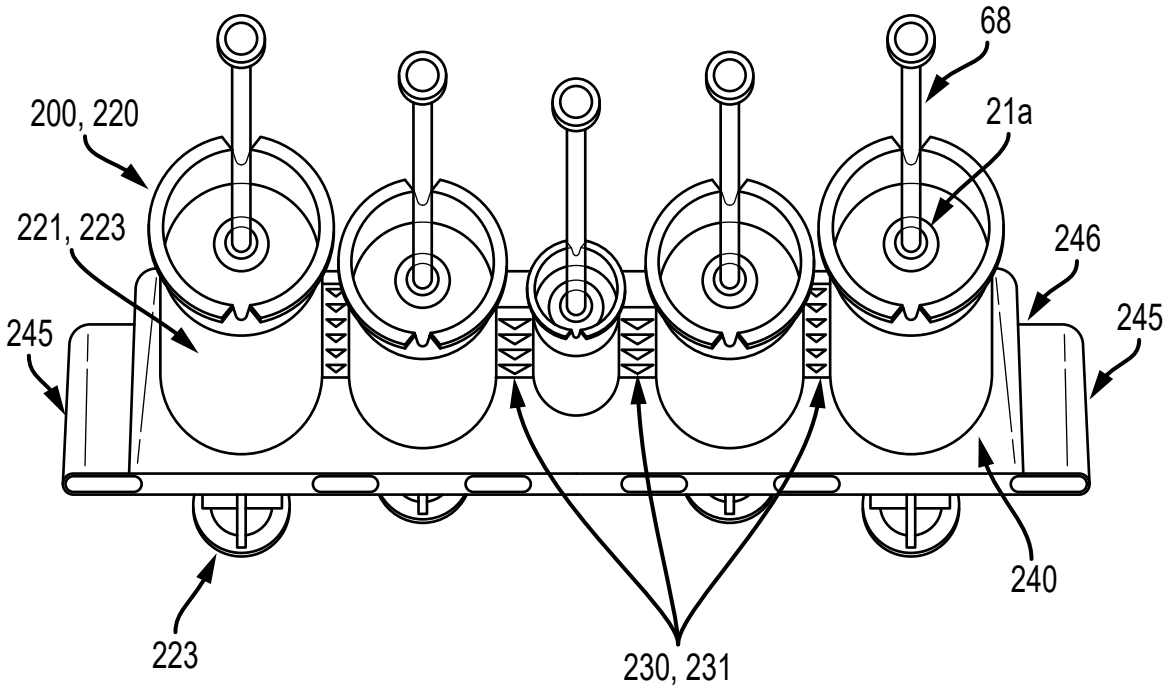

FIG.10b

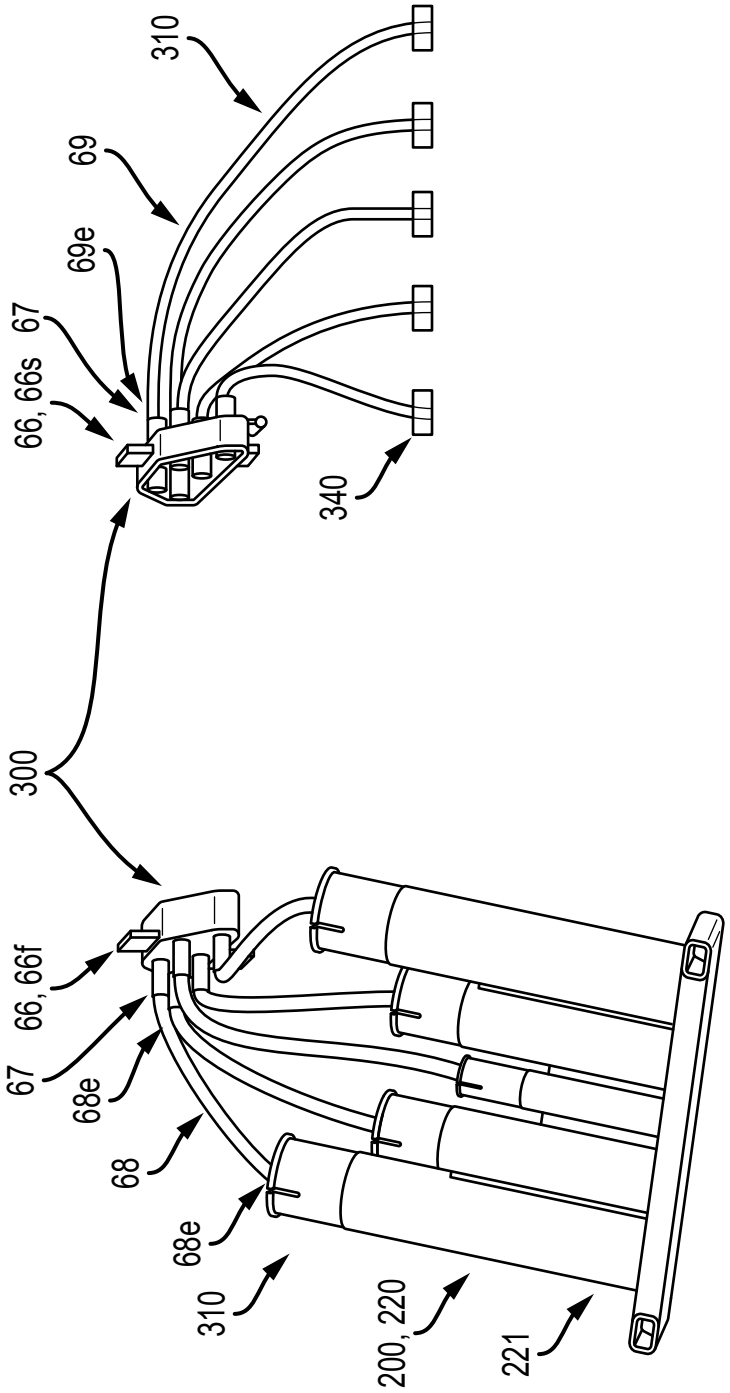

FIG.11

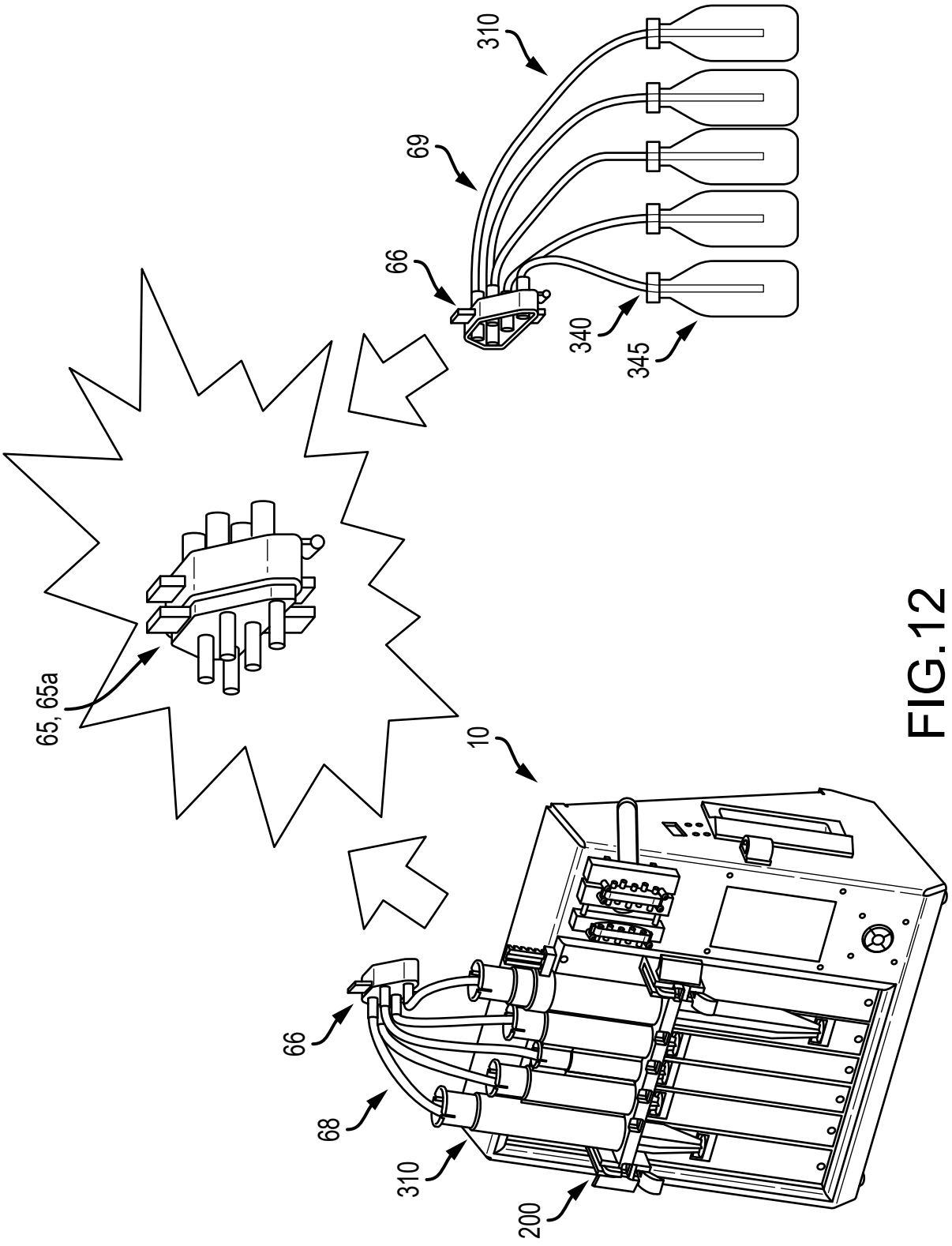

FIG.12

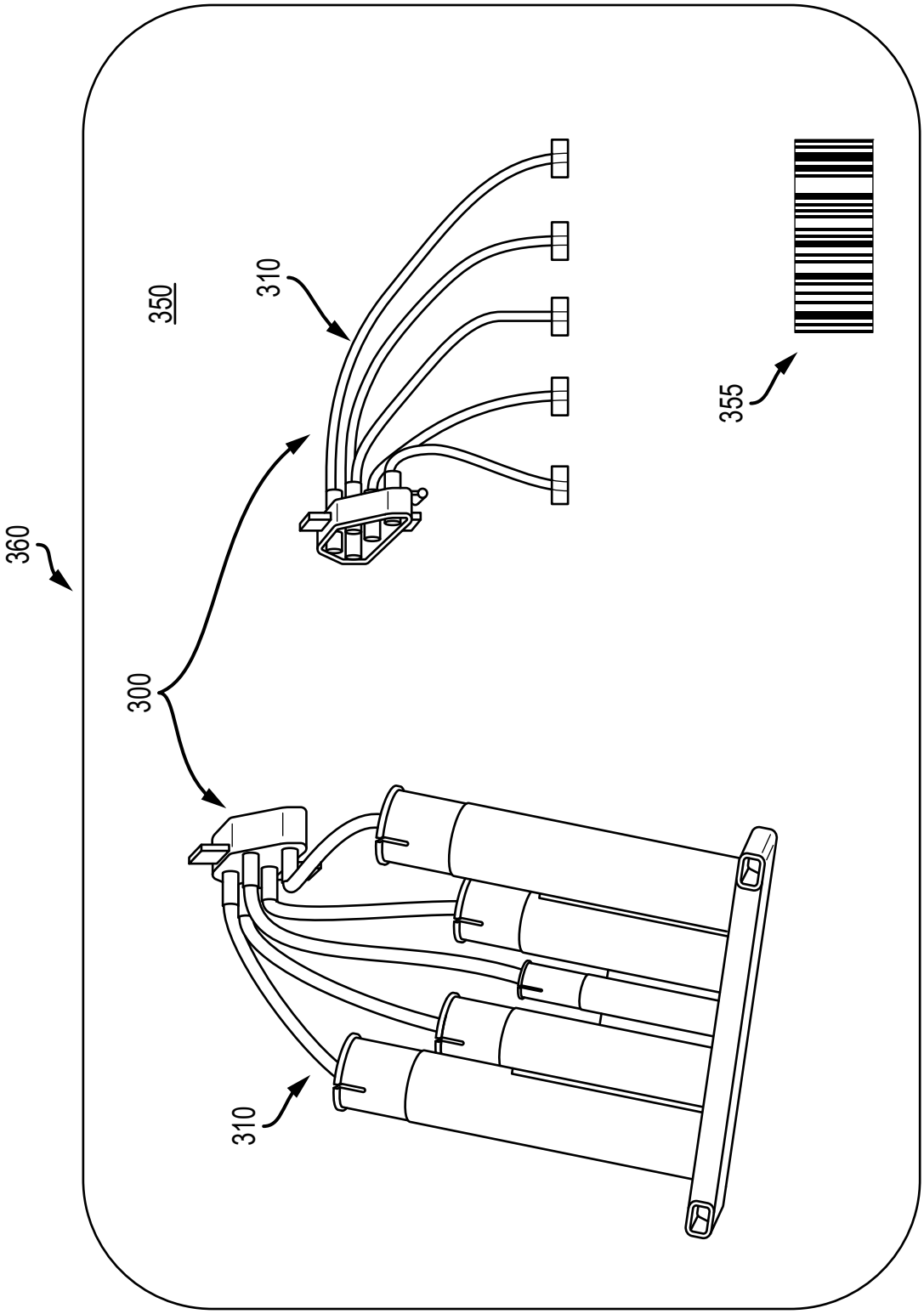

FIG.13