Fig. 1

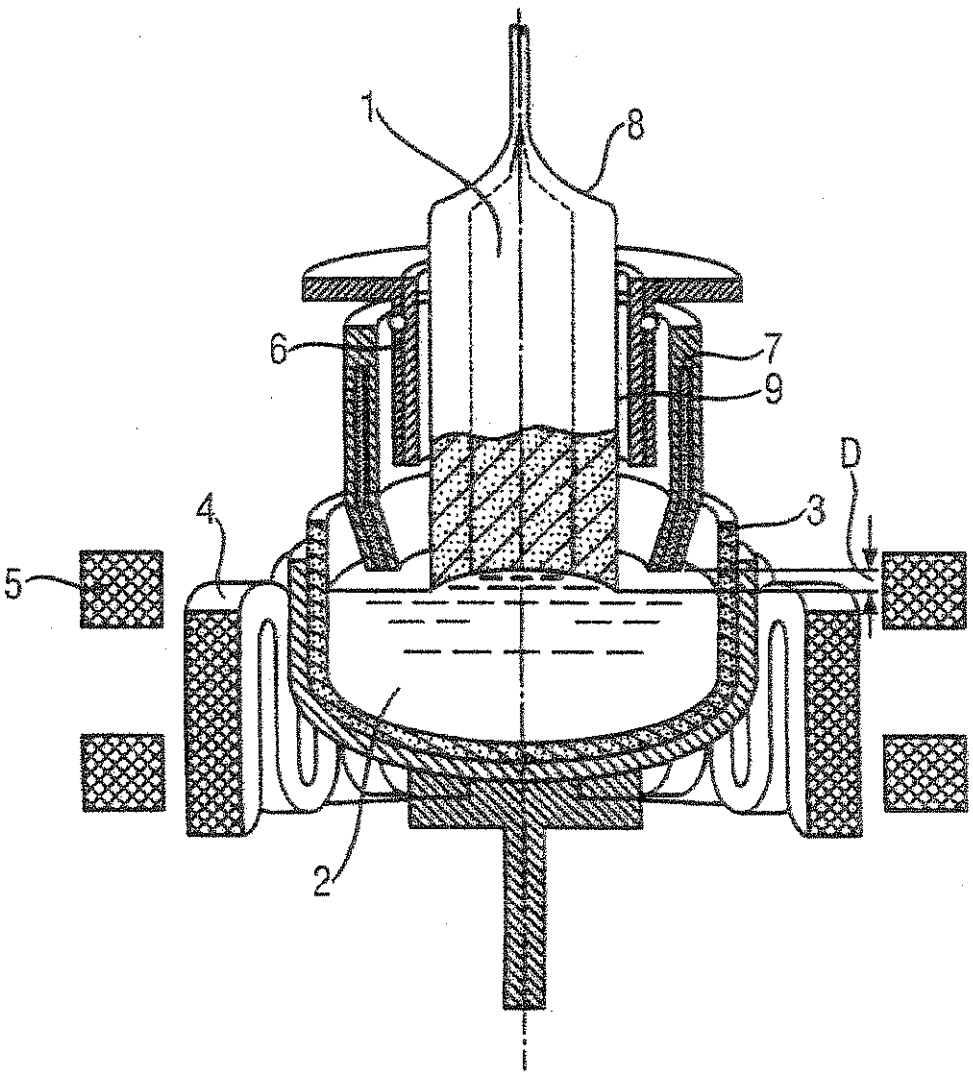

Fig. 2

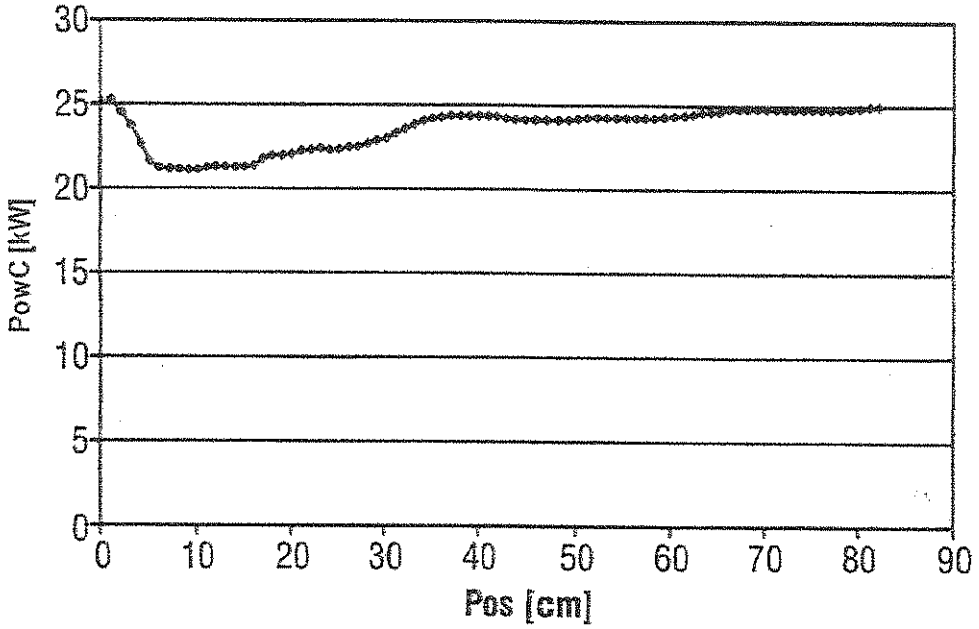

Fig. 3

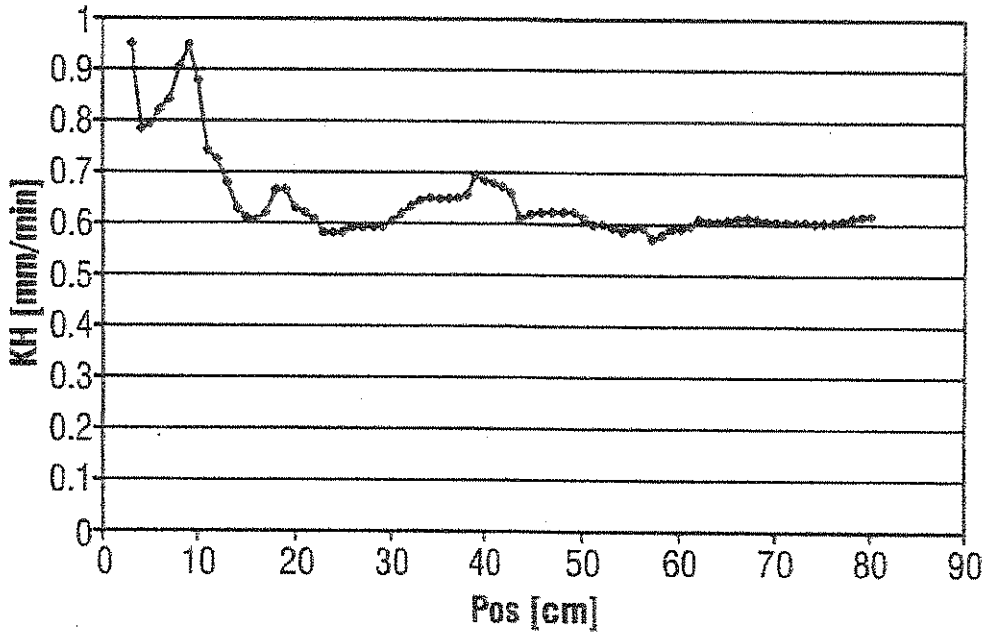
KH [mm/min]
1
0.9
0.8
0.7
0.6
0.5
0.4
0.3
0.2
0.1
0
0
10
20
30
40
50
60
70
80
90
Pos [cm]

Fig. 4

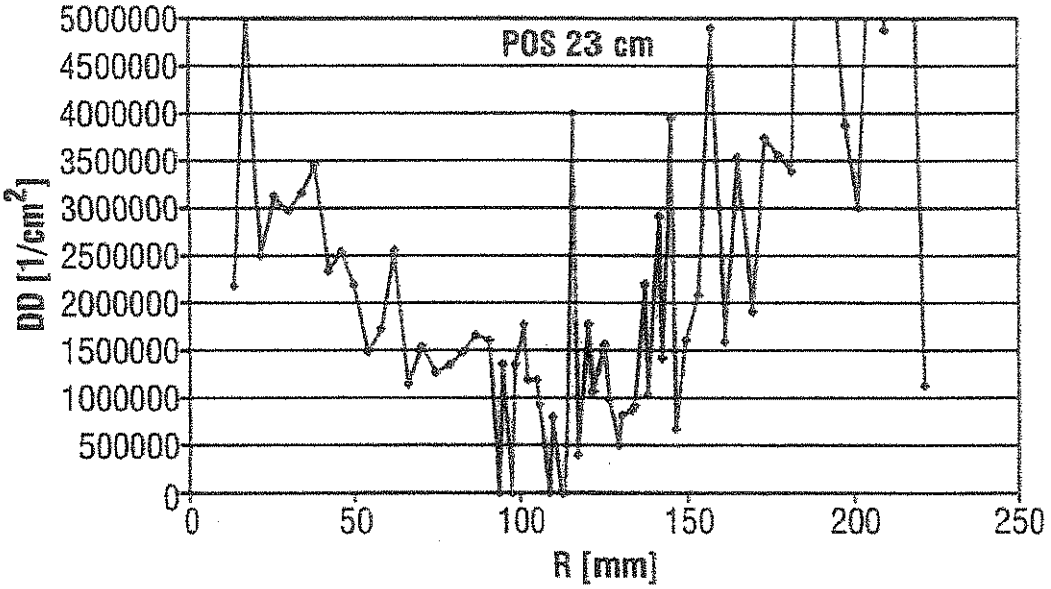
POS 23 cm
DD [1/cm²]
5000000
4500000
4000000
3500000
3000000
2500000
2000000
1500000
1000000
500000
0
0
50
100
150
200
250
R [mm]

Fig. 5

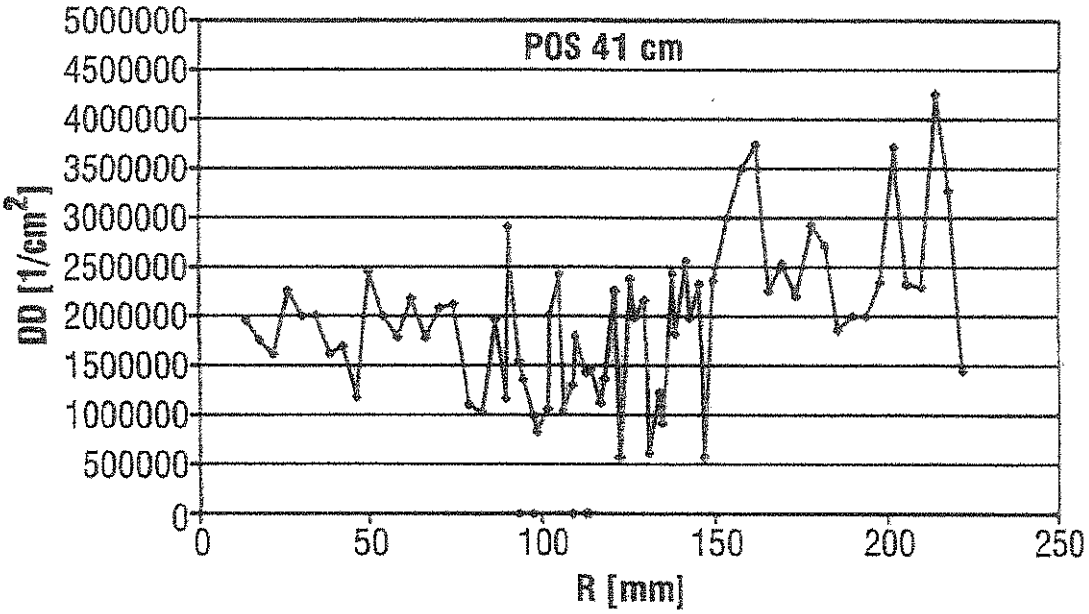
POS 41 cm
5000000
4500000
4000000
3500000
3000000
2500000
2000000
1500000
1000000
500000
0
BD [1/cm²]
0
50
100
150
200
250
R [mm]

Fig. 6

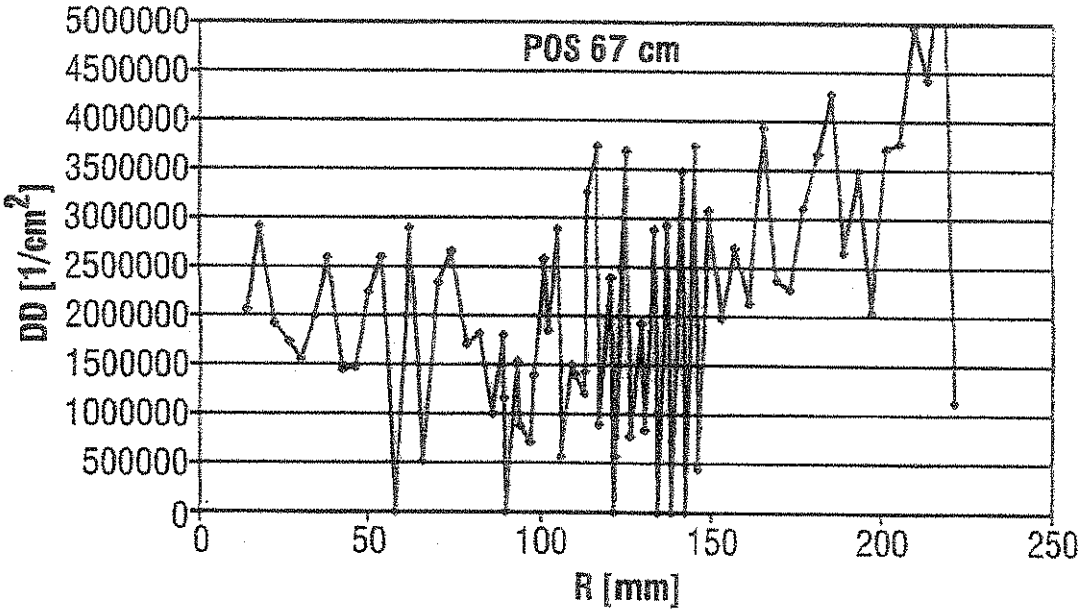
POS 67 cm
DD [1/cm²]
5000000
4500000
4000000
3500000
3000000
2500000
2000000
1500000
1000000
500000
0
0
50
100
150
200
250
R [mm]

Fig. 7

