[図1]

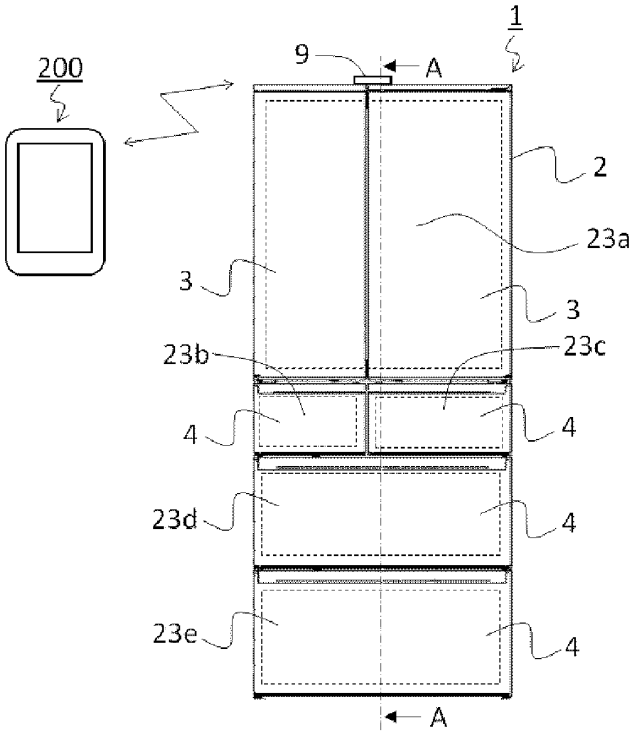
200
9
A
1
2
23a
3
3
23b
23c
4
4
23d
4
23e
4
A

[図2]

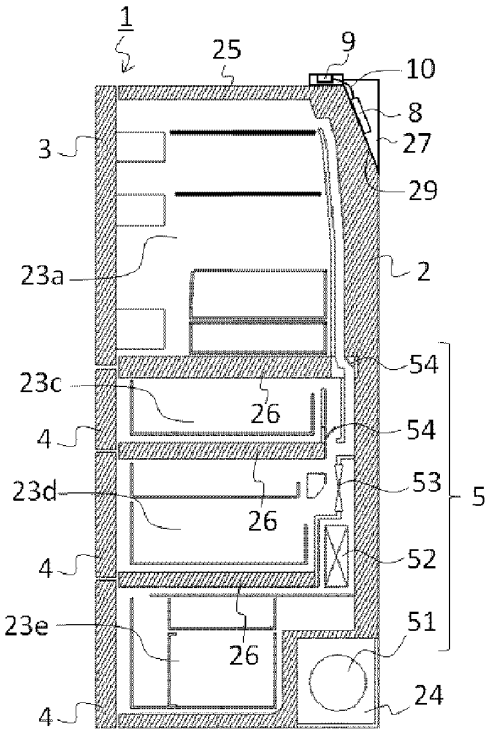
1
25
9
10
8
27
29
3
23a
2
54
23c
26
4
54
23d
53
5
26
4
52
23e
51
26
4
24

[図3]

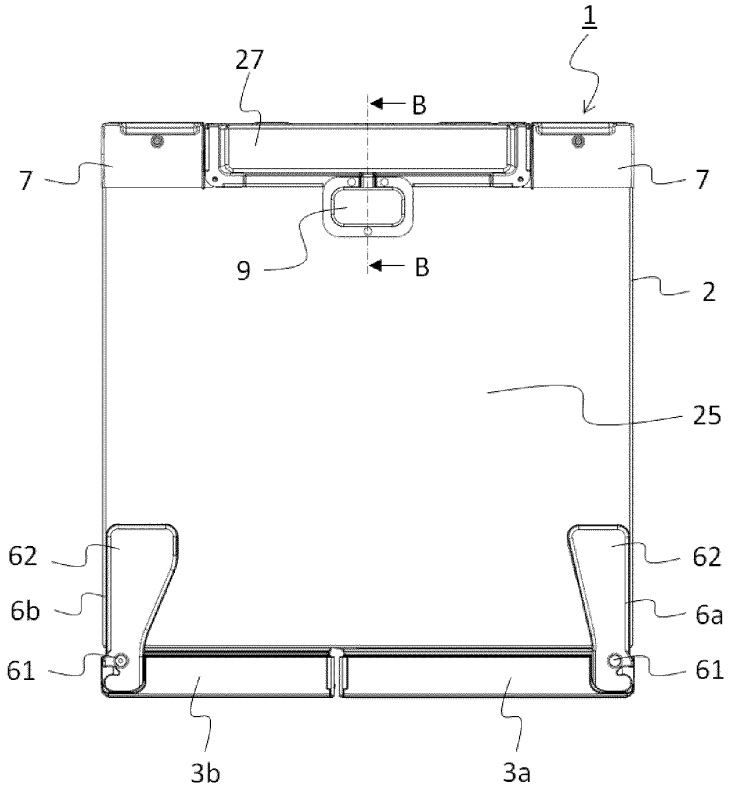
1
27
B
7
7
9
B
2
25
62
62
6b
6a
61
61
3b
3a

[図4]

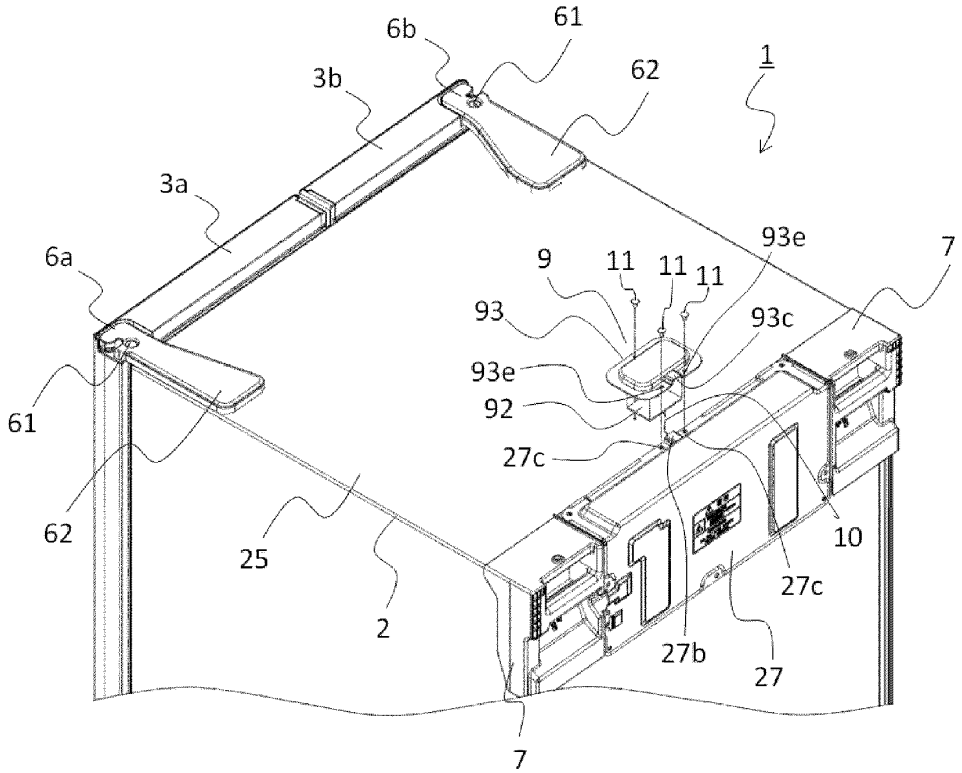
6b
61
62
1
3b
3a
6a
9
11
11
11
93e
7
93
93c
93e
92
61
27c
62
10
25
27c
2
27b
27
7

[図5]

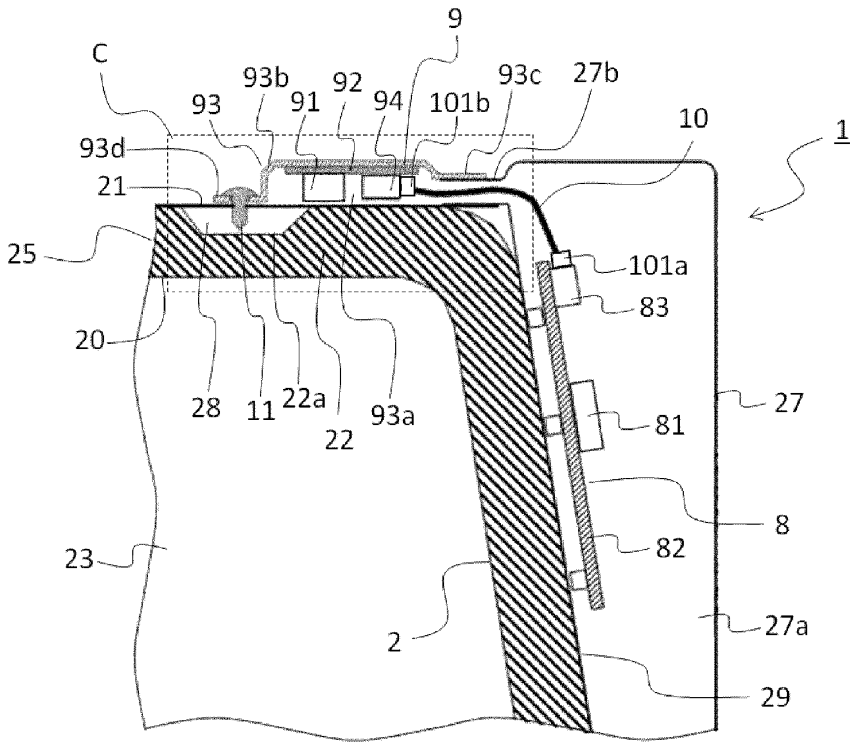
9
C
93b
92
93c
27b
93
91
94
101b
10
1
93d
21
25
101a
83
20
28
11
22a
93a
22
27
81
8
23
82
2
27a
29

[図6]

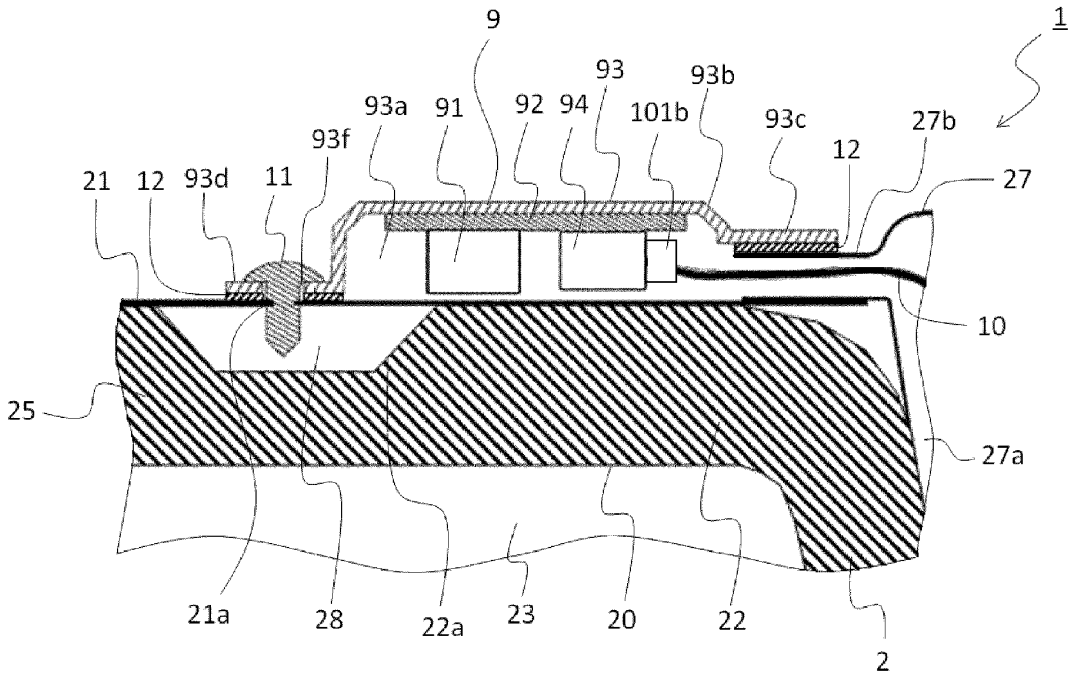
9
1
93
93b
93a
91
92
94
101b
93c
27b
93f
12
21
12
93d
11
27
10
25
27a
21a
28
22a
23
20
22
2

[図7]

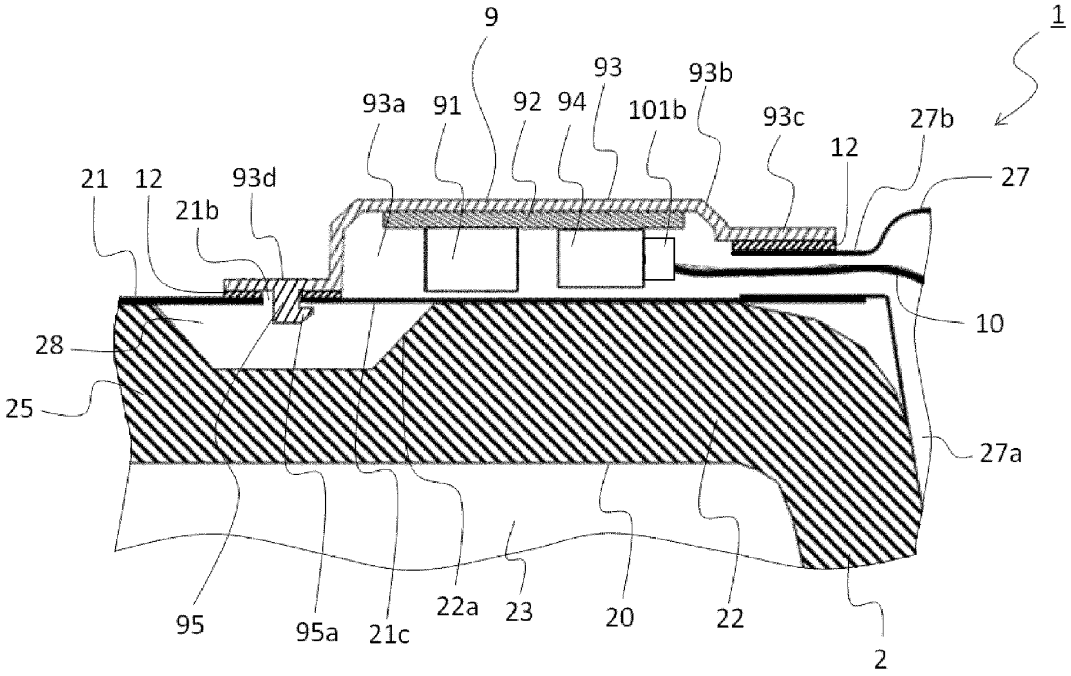
9
1
93
93b
93a
91
92
94
101b
93c
27b
12
21
12
93d
27
21b
10
28
25
27a
95
95a
21c
22a
23
20
22
2

[図8]

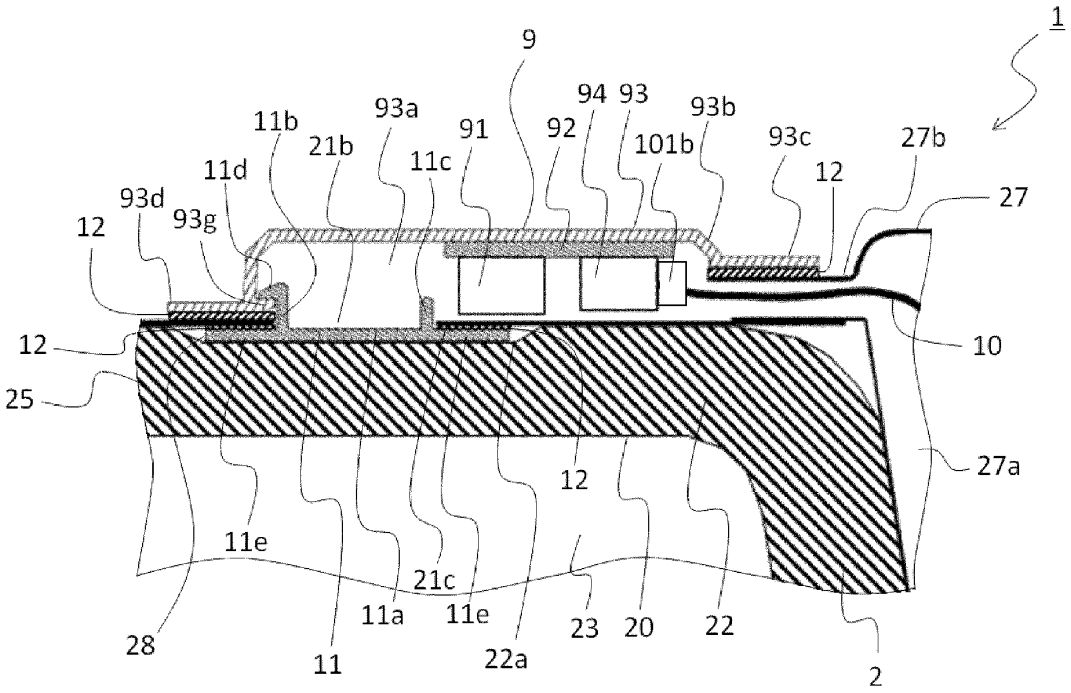
1
9
11b
93a
94
93
93b
21b
91
92
101b
93c
27b
11d
11c
12
93d
93g
27
12
10
12
25
27a
12
11e
21c
11a
11e
23
20
22
28
11
22a
2

[図9]

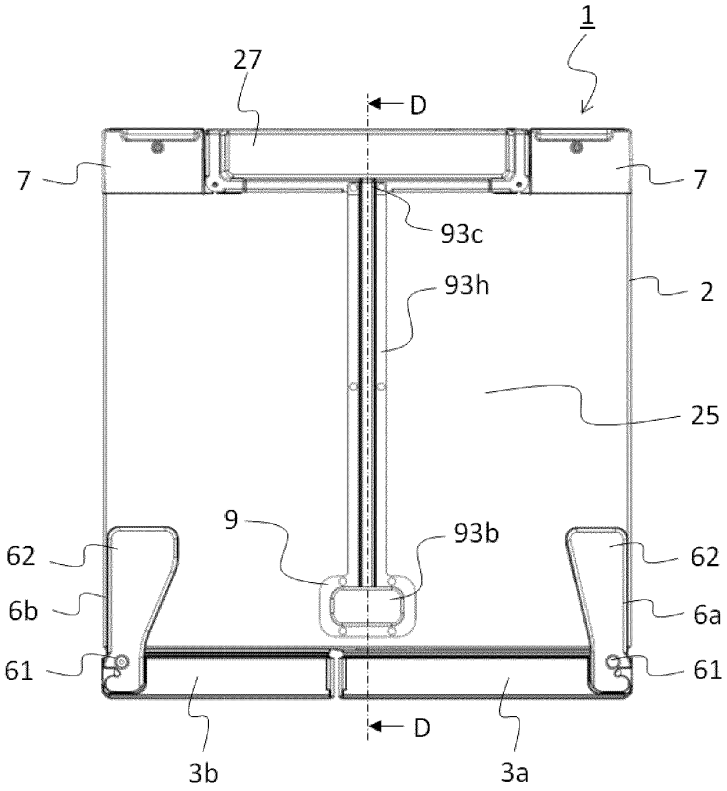
1
27
D
7
7
93c
93h
2
25
9
93b
62
62
6b
6a
61
61
D
3b
3a

[図10]

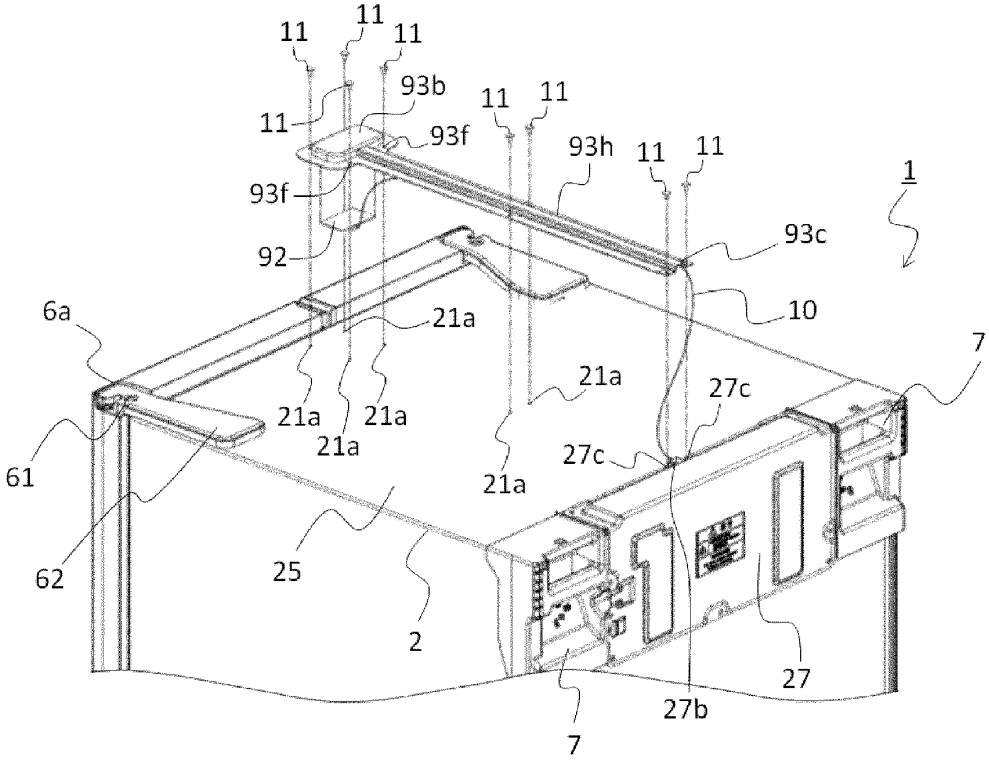
11
11
11
93b
11
11
11
93f
93h
11
11
1
93f
92
93c
10
6a
21a
7
21a
27c
21a
21a
21a
27c
61
21a
62
25
2
27
27b
7

[図11]

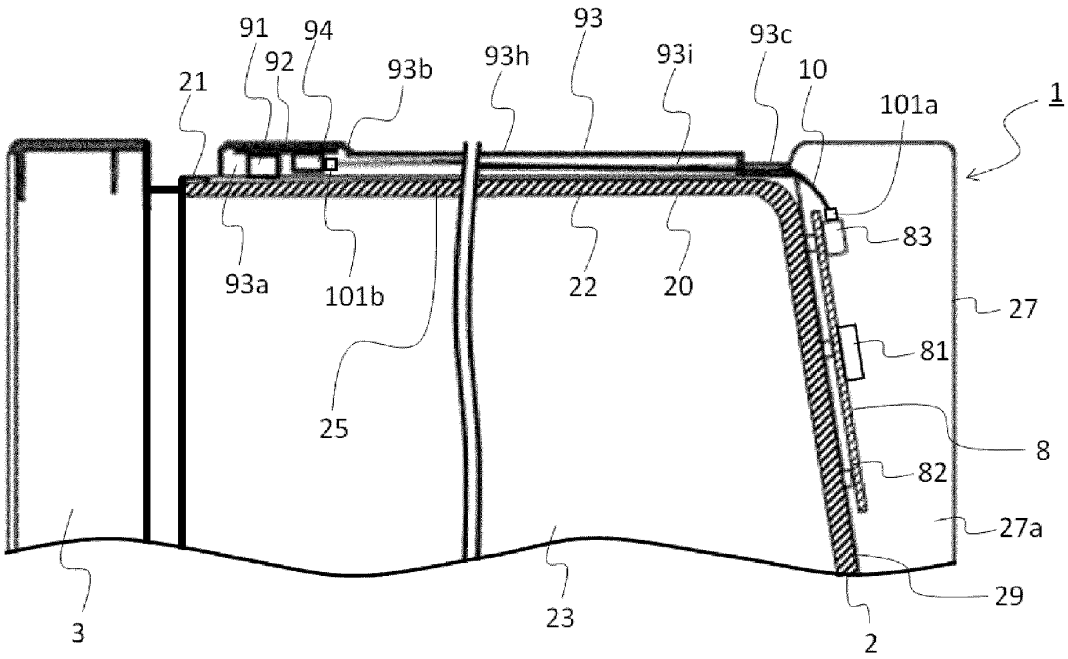
91
94
92
93b
93h
93
93i
93c
10
101a
1
21
83
93a
101b
22
20
27
81
25
8
82
27a
29
3
23
2

[図12]

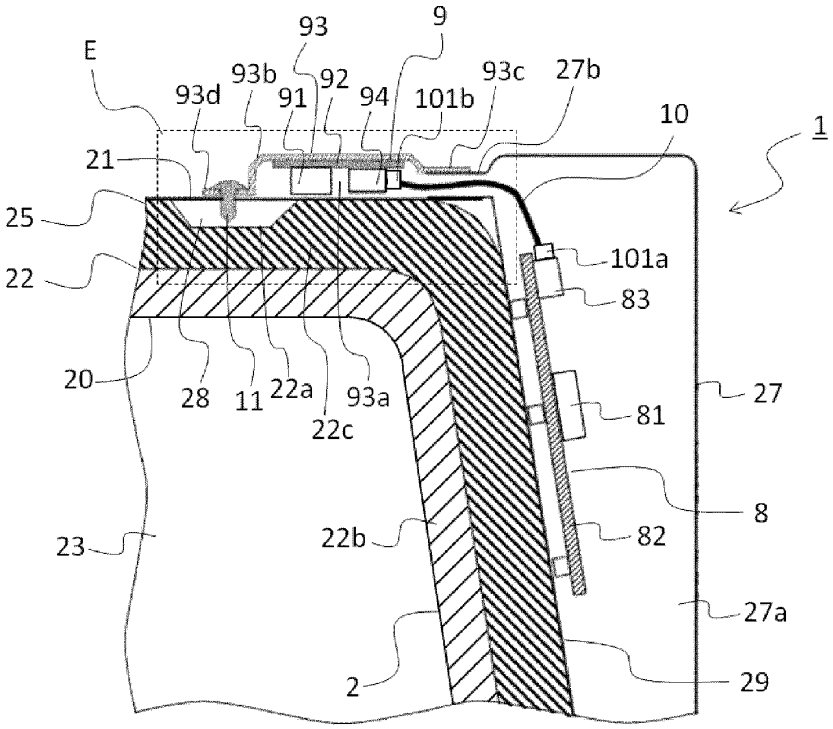
93
9
E
93b
92
93c
27b
93d
91
94
101b
10
1
21
25
101a
22
83
20
28
11
22a
93a
22c
27
81
8
23
22b
82
27a
2
29

[図13]

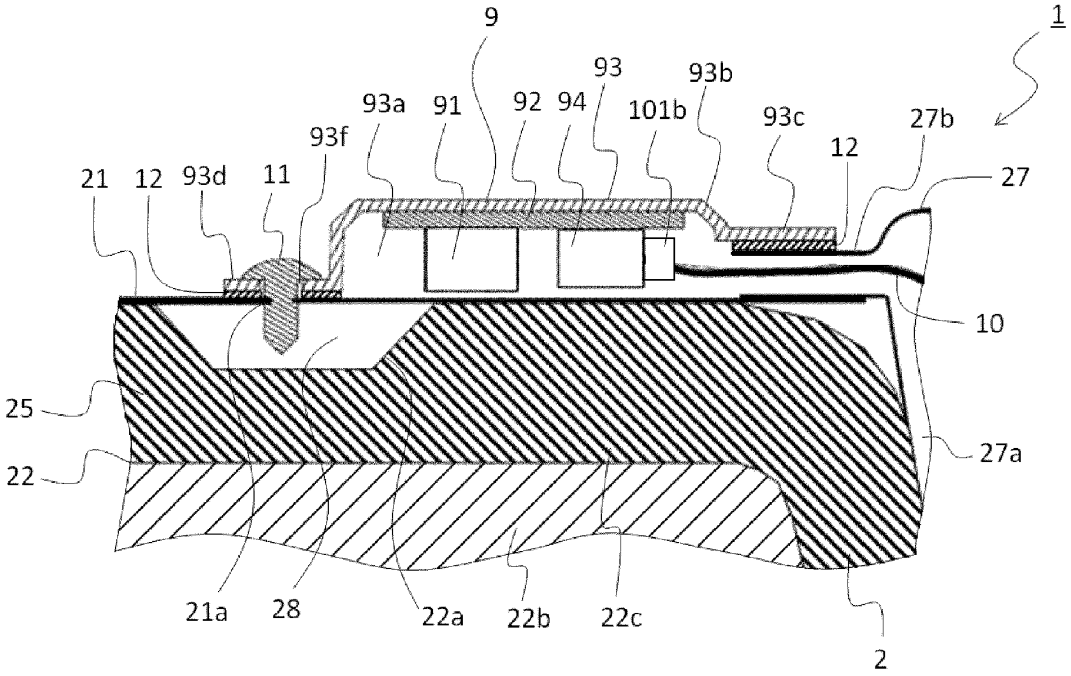
9
1
93
93b
93a
91
92
94
101b
93c
27b
93f
12
21
12
93d
11
27
10
25
27a
22
21a
28
22a
22b
22c
2

[図14]

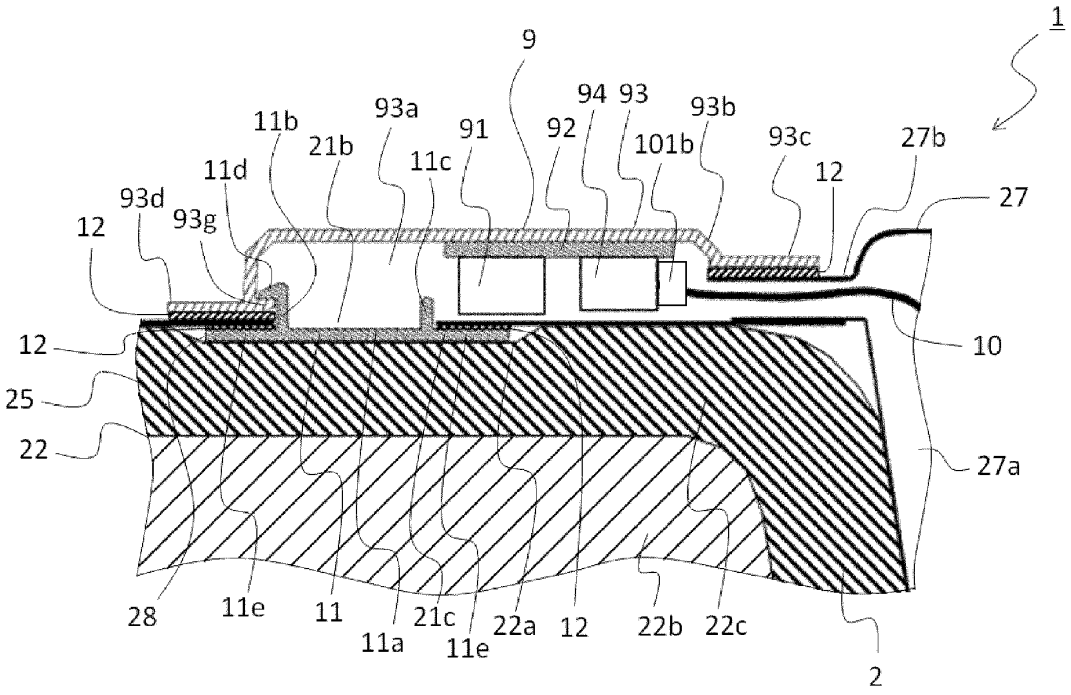
1
9
94
93
93b
11b
93a
91
92
101b
93c
27b
21b
11c
11d
12
93d
93g
27
12
12
10
25
27a
22
28
11e
11
21c
22a
12
22b
22c
11a
11e
2

[図15]

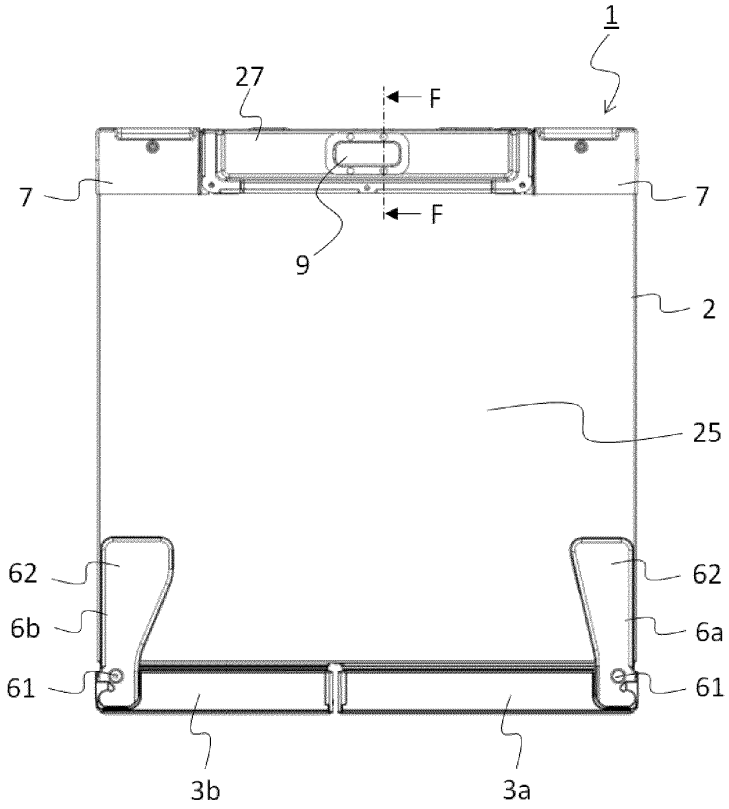

[図16]

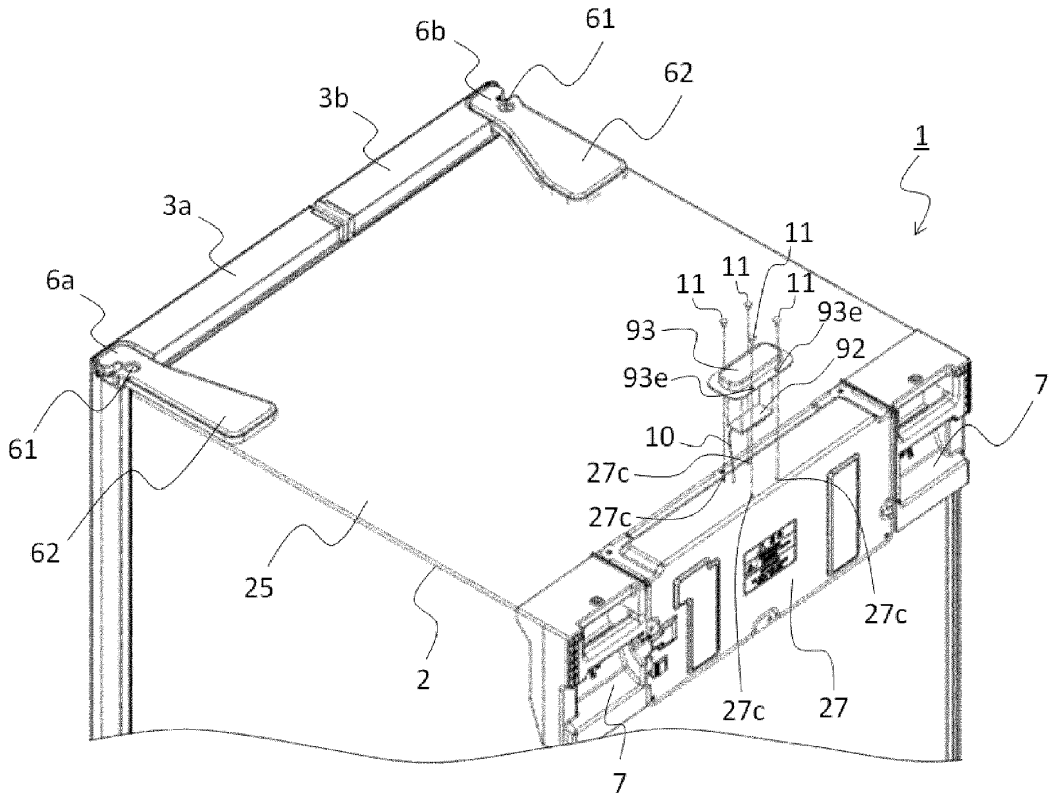
6b
61
62
3b
1
3a
11
11
11
11
6a
93e
93
92
93e
7
10
61
27c
27c
62
25
27c
2
27c
27
7

[図17]

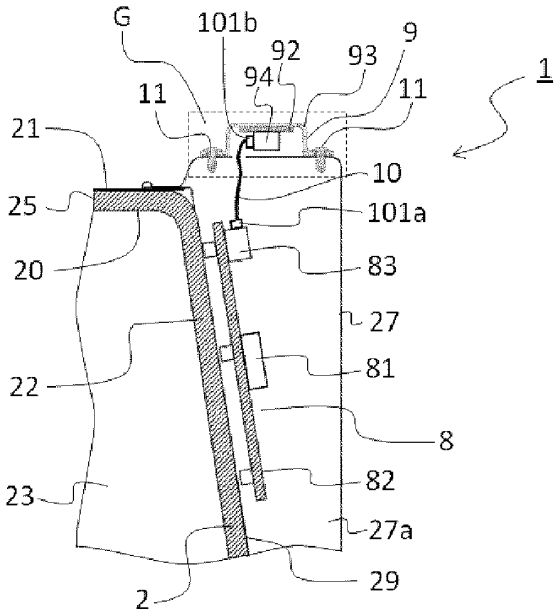
G
101b
92
9
93
94
1
11
11
21
10
25
101a
20
83
27
22
81
8
23
82
27a
29
2

[図18]

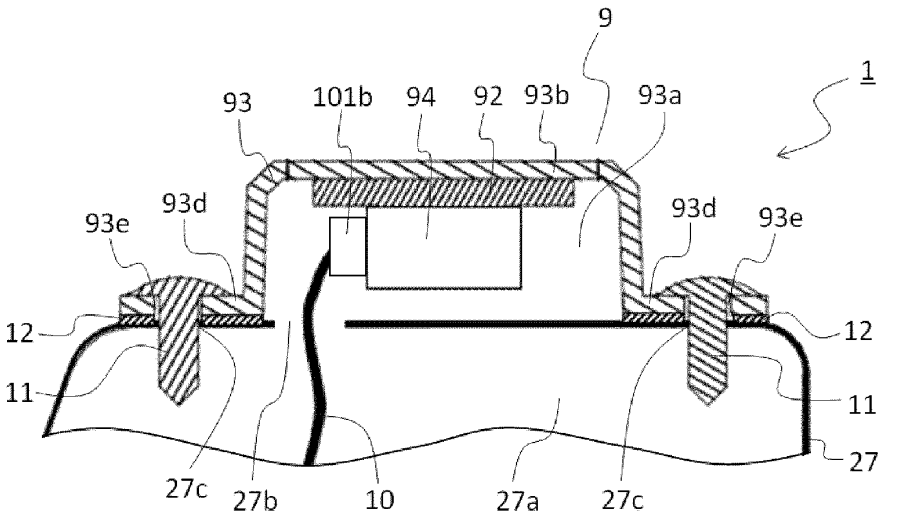
9
1
93
101b
94
92
93b
93a
93e
93d
93d
93e
12
12
11
11
27
27c
27b
10
27a
27c

[図19]

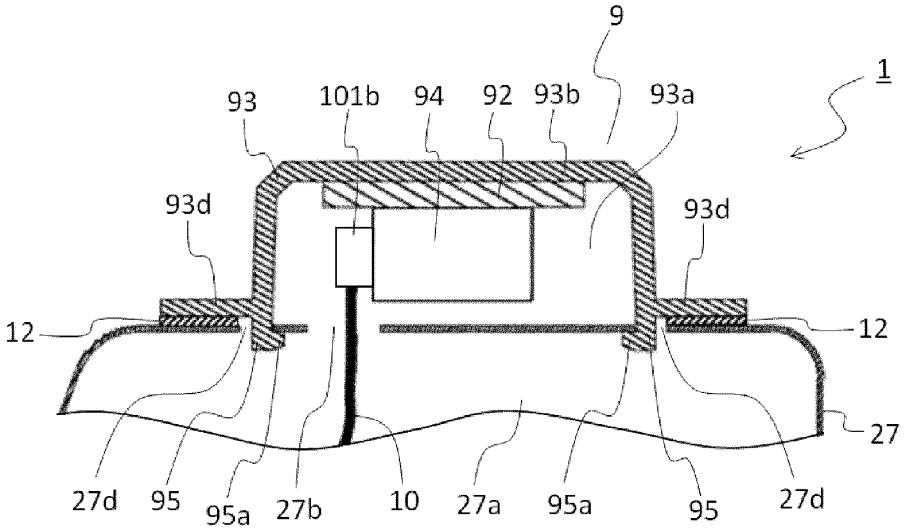
9
1
93
101b
94
92
93b
93a
93d
93d
12
12
27
27d
95
95a
27b
10
27a
95a
95
27d