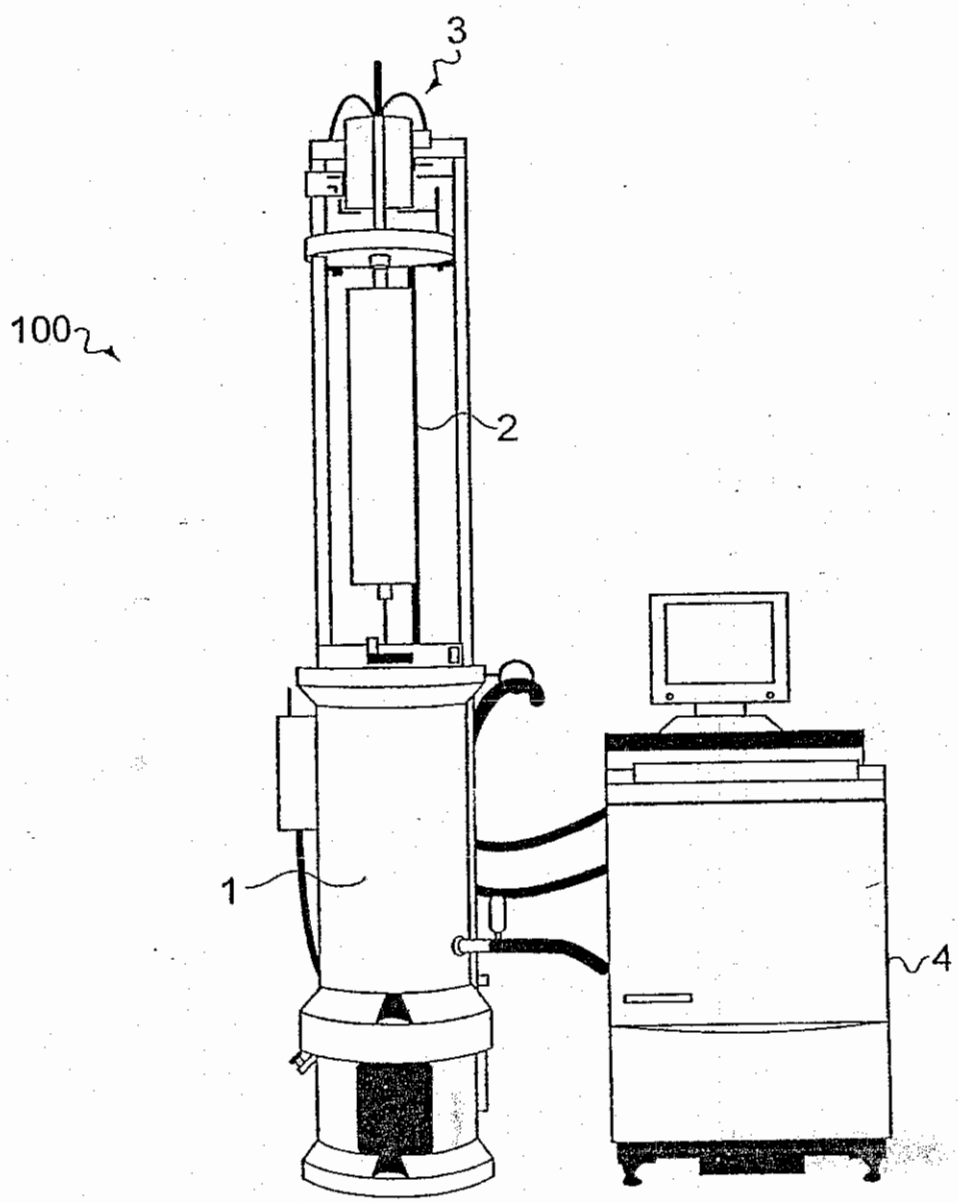
100
3
2
1
4

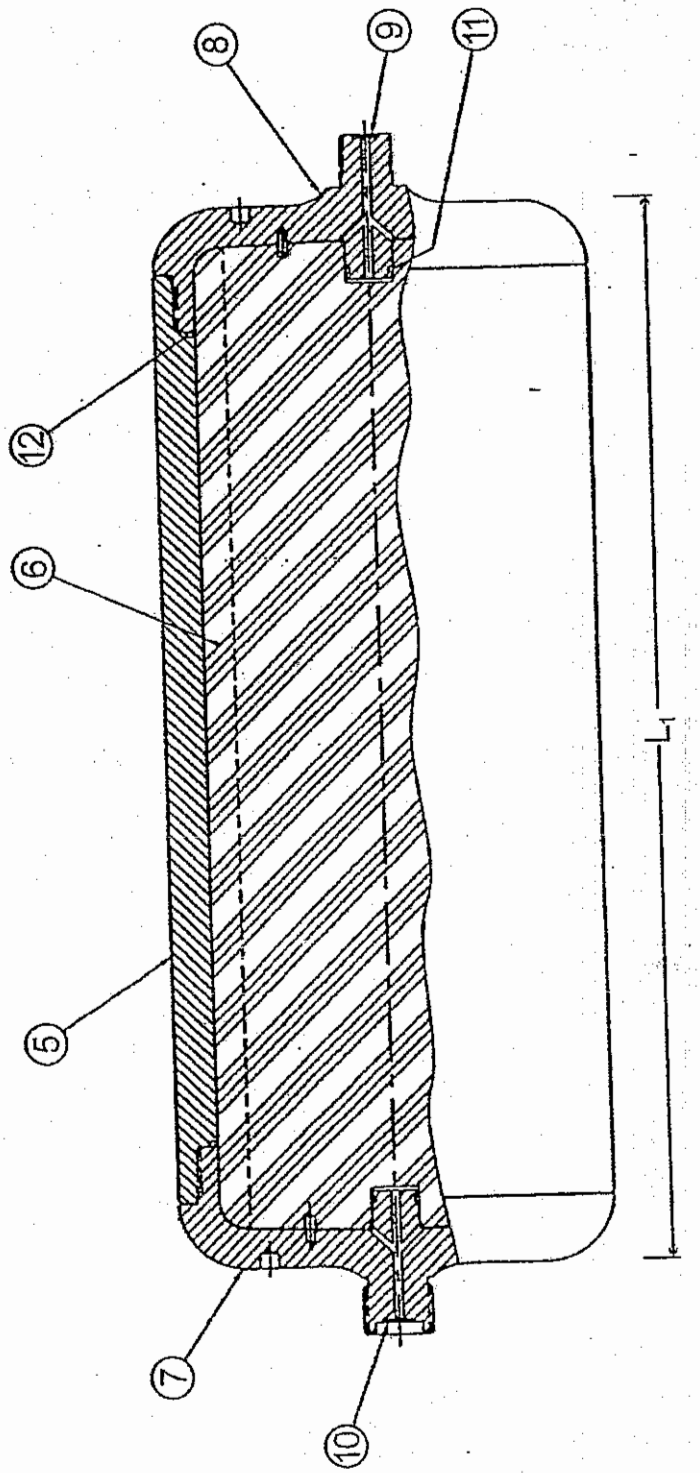

FIG. 2A

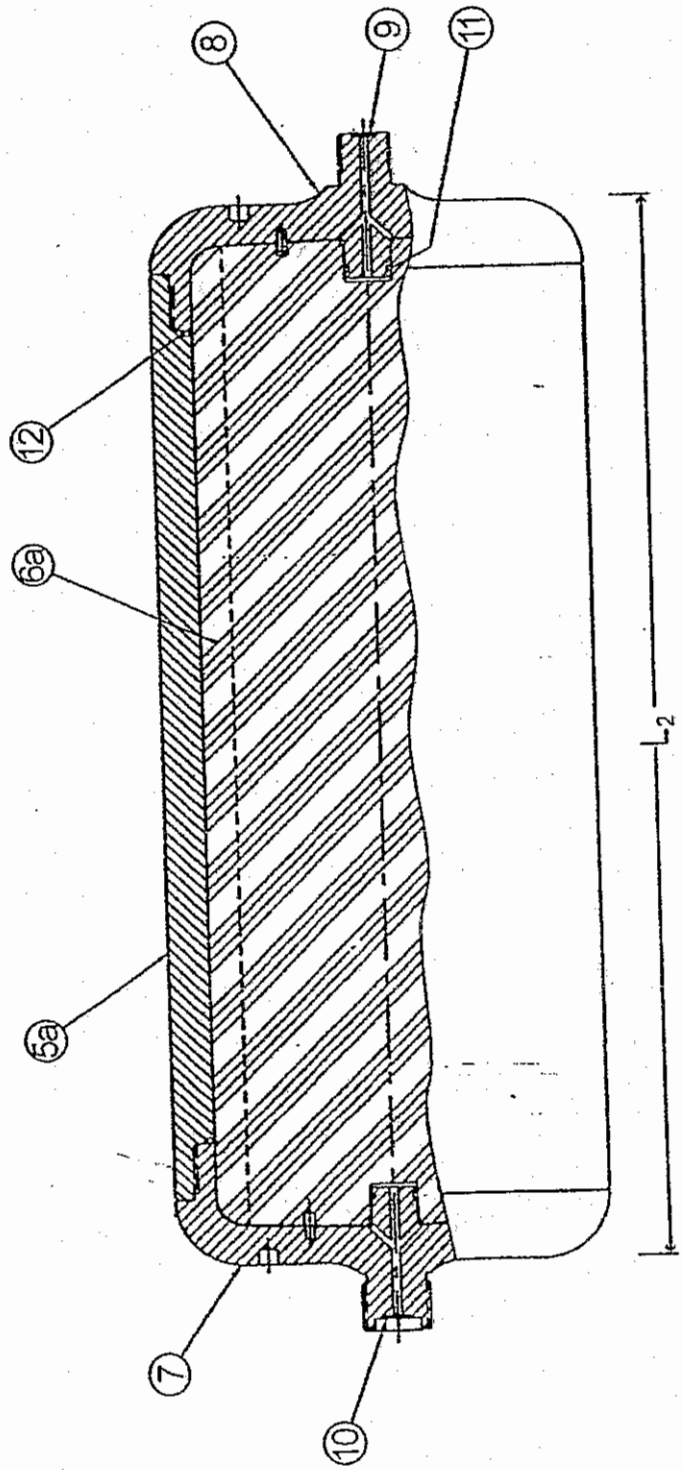

FIG. 2B

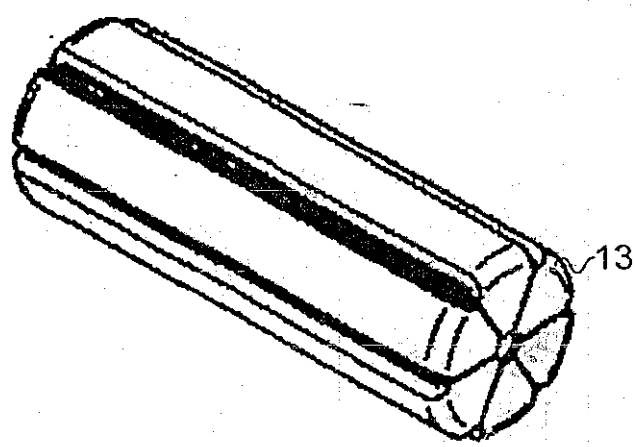

FIG. 3A

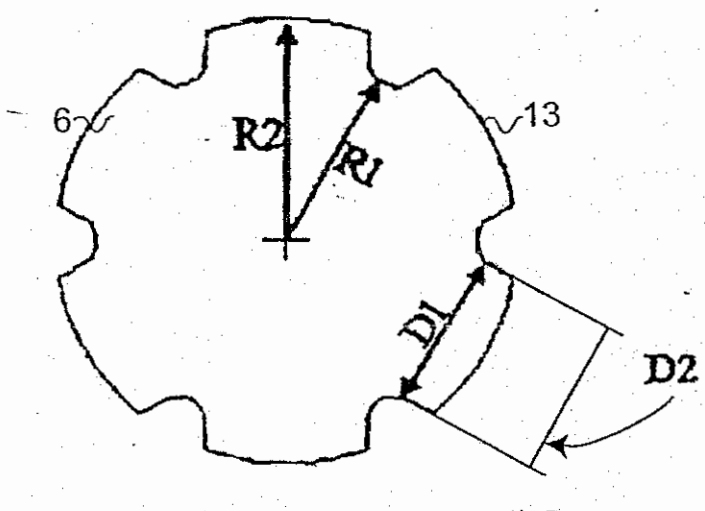

FIG. 3B

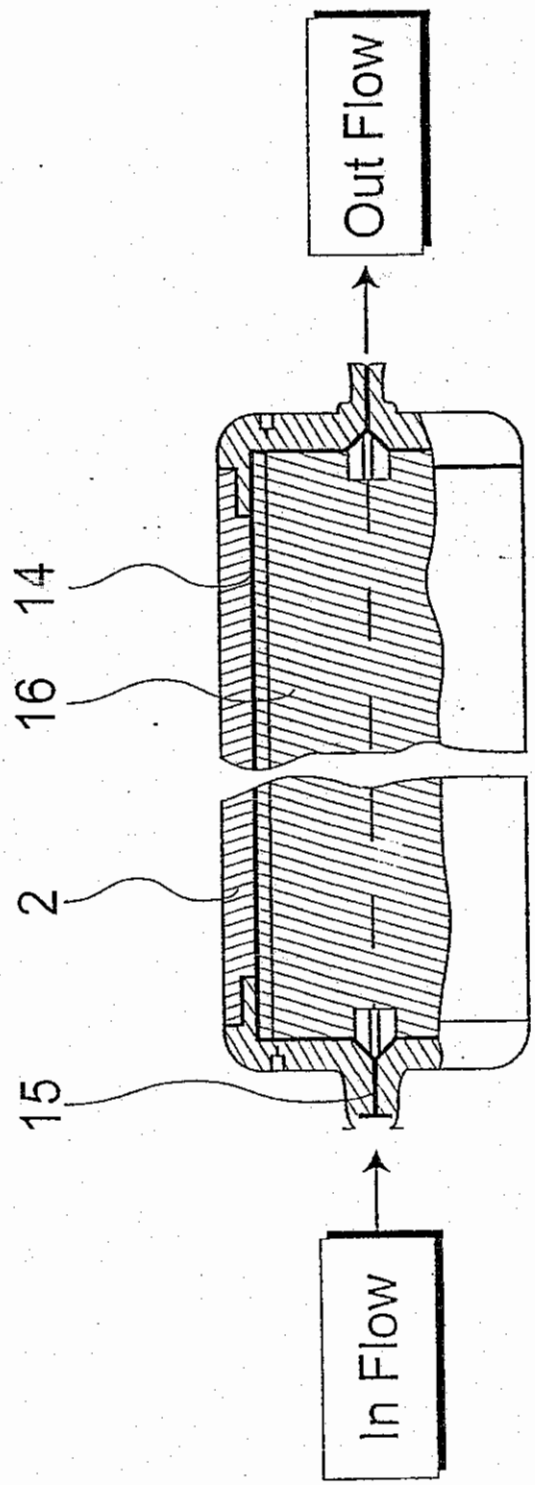

FIG. 4

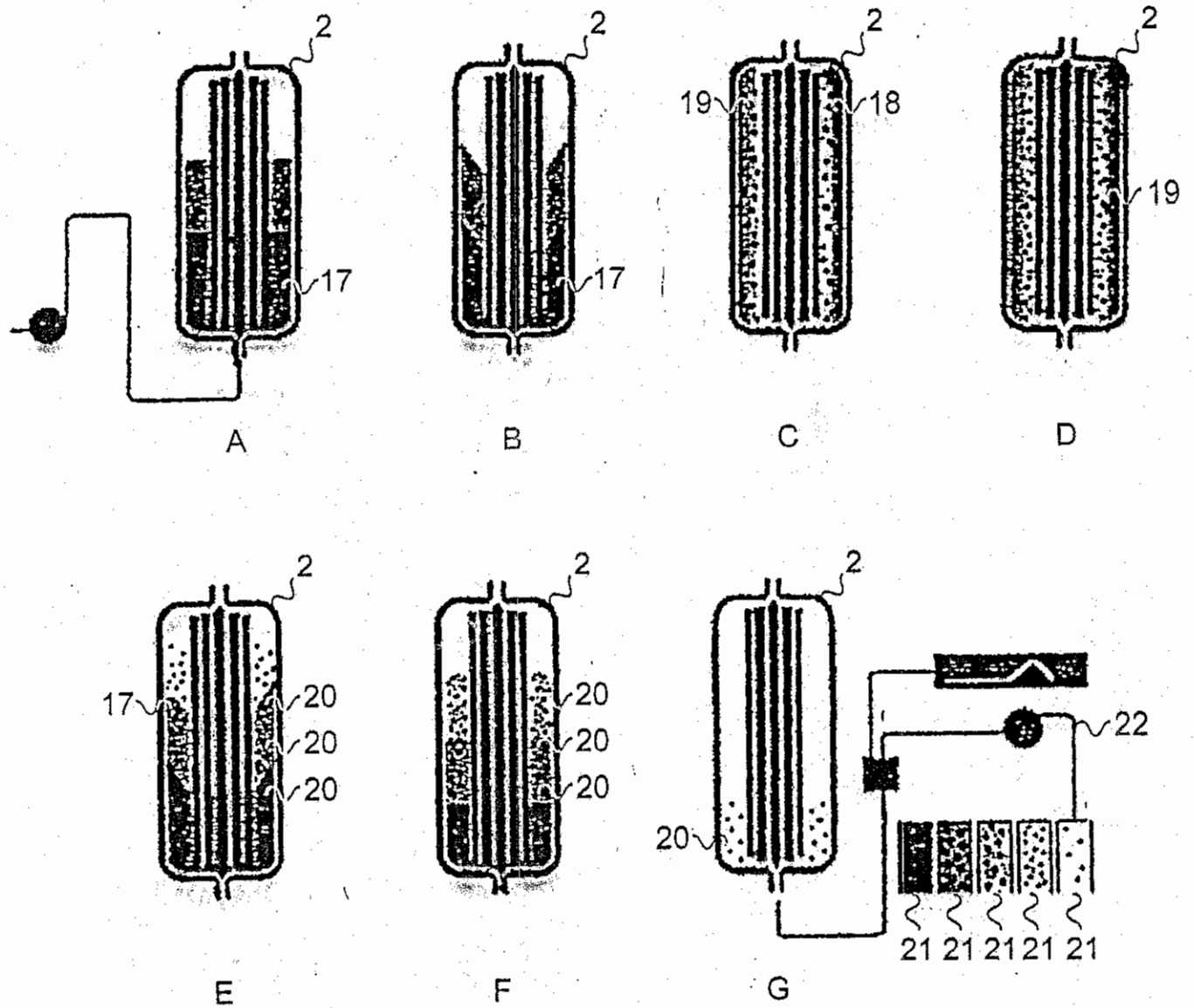
2
17
A
2
17
B
2
19
18
C
2
19
D
2
17
20
20
20
E
2
20
20
20
F
2
20
22
21 21 21 21 21
G

FIG. 5

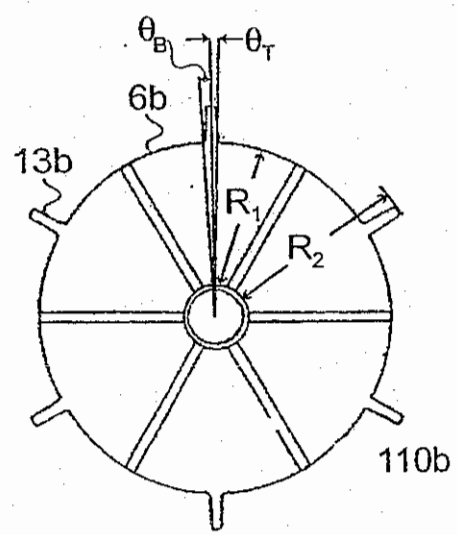

FIG. 6

66.0	R2	Outer Radius of the Core in mm	2.598	inches		
54.5	R1	Inner Radius in mm	2.145	inches		
	Theta-T	Angle formed by one-half the top fin surface in radians	.0160	0.91527174	degrees	
	Theta-B	Angle formed by one-half the bottom fin surface in radians	0.0106	0.60780781	degrees	
764.3	L	Length of the Core in mm				
30.090						
V2		Total volume of the Cylinder:	10455661.2	mm^3	10456	mL
V1		Total volume of the Core trunk:	7124023.0	mm^3	7124	mL
W1		Fin Volume Component 1:	8470.4	mm^3	102	mL
C1		Length of the Chord formed for W2:	0.6	mm	0.023	inch
W2		Fin Volume Component 2:	2543.2	mm^3	31	mL
		Available Volume:	3199.47	mm^3	= 3.2	L
	D1	Lateral distance across fin bottom in mm	0.114	inches	(D2+0.031")	2.8956
2.1	D2	Lateral distance across fin top in mm	0.083	inches		
0.083						

				Outer	Inner
				26582.7	18112.27
				3.327887	0.000295

			Intermediate Terms	
Calculated Theta-T in radians	0.0160	0.915272 degrees	0.999	
Calculated (Theta-T+Theta-B) in radians	0.0266	1.52308 degrees	0.999	
Calculated Theta-B in radians	0.0106	0.607808 degrees		
Calculated fin Wall Angle in radians	-1.5366	-88.04247 degrees	11.5189	-0.3937

FIG. 7

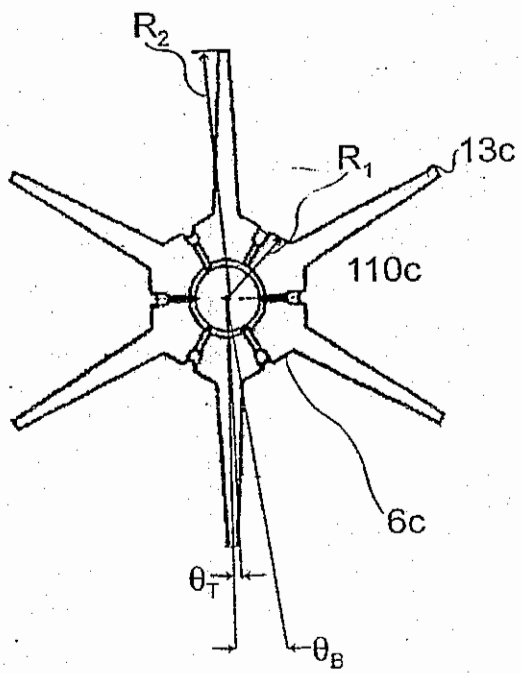

FIG. 8

66.0	R2	Outer Radius of the Core in mm	2.598	inches		
21.0	R1	Inner Radius in mm	0.825	inches		
	Theta-T	Angle formed by one-half the top fin surface in radians	0.0192	1.10275822	degrees	
	Theta-B	Angle formed by one-half the bottom fin surface in radians	0.1329	7.6119838	degrees	
754.1	L	Length of the Core in mm				
29.690						

V2	Total volume of the Cylinder:	10316669.4	mm^3	10317	mL	
V1	Total volume of the Core trunk:	1040325.2	mm^3	1040	mL	Outer Inner
W1	Fin Volume Component 1:	28415.5	mm^3	341	mL	31602.2 3186.742
C1	Length of the Chord formed for W2:	2.8	mm	0.110	inch	
W2	Fin Volume Component 2:	47172.1	mm^3	566	mL	62.6377 0.085731
	Available Volume:	8369.29	mm^3	8.4	L	

	D1	Lateral distance across fin bottom in mm	0.250	inches	(D2+0.031") 6.35000
2.5	D2	Lateral distance across fin top in mm	0.100	inches	
0.100					

				Intermediate Terms	
Calculated Theta-T in radians	0.0192	1.102758	degrees	0.999	
Calculated (Theta-T+Theta-B) in radians	0.1521	8.714742	degrees	0.954	
Calculated Theta-B in radians	0.1329	7.611984	degrees		
Calculated fin Wall Angle in radians	-1.5285	-87.57776	degrees	45.0342	-1.905

FIG. 9

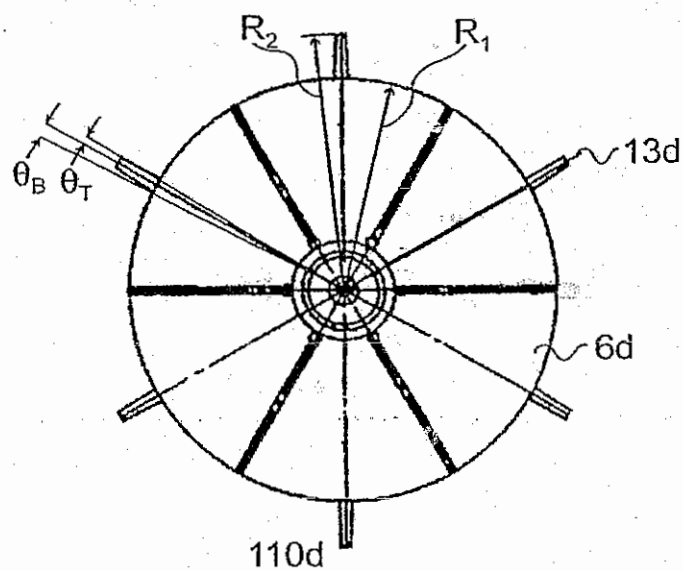

FIG. 10

66.0	R2	Outer Radius of the Core in mm	2.598	inches		
54.5	R1	Inner Radius In mm	2.145	inches		
	Theta-T	Angle formed by one-half the top fin surface in radians	0.0160	0.91527174	degrees	
	Theta-B	Angle formed by one-half the bottom fin surface in radians	0.0106	0.60780781	degrees	
762.7	L	Length of the Core in mm				
30.027						

V2	Total volume of the Cylinder:	10433770.0	mm^3	10434	mL	
V1	Total volume of the Core trunk:	7109107.3	mm^3	7109	mL	Outer 26527.04 Inner 18074.35
W1	Fin Volume Component 1:	8452.7	mm^3	101	mL	
C1	Length of the Chord formed for W2:	0.6	mm	0.023	inch	
W2	Fin Volume Component 2:	2537.9	mm^3	30	mL	3.327887 0.000295
	Available Volume:	3192.78	mm^3	=	3.2 L	

	D1	Lateral distance across fin bottom in mm	0.114	inches	(D2+0.031") 2.89116
2.1	D2	Lateral distance across fin top in mm	0.083	inches	
0.985					

				Intermediate Terms
	Calculated Theta-T in radians	0.0160	0.915272 degrees	0.999
	Calculated (Theta-T+Theta-B) in radians	0.0266	1.52308 degrees	0.999
	Calculated Theta-B in radians	0.0106	0.607808 degrees	
	Calculated fin Wall Angle in radians	-1.5366	-88.04247 degrees	11.5189 -0.3937

FIG. 11

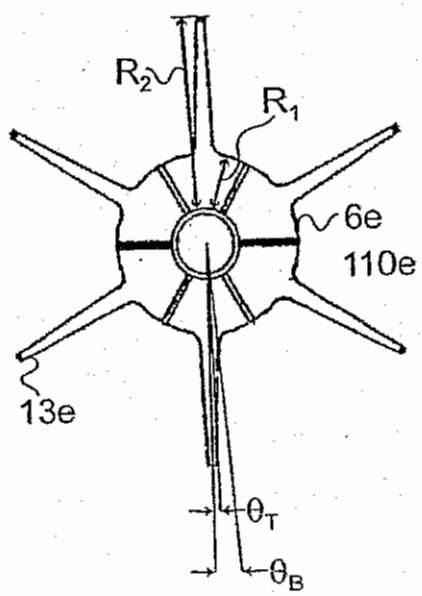

FIG. 12

66.0	R2	Outer Radius of the Core in mm	2.598	inches		
26.7	R1	Inner Radius in mm	1.052	Inches		
	Theta-T	Angle formed by one-half the top fin surface in radians	0.0217	1.2461381	degrees	
	Theta-B	Angle formed by one-half the bottom fin surface in radians	0.0844	4.83798852	degrees	
764.3	L	Length of the Core in mm				
30.090						
V2	Total volume of the Cylinder:		10455661.2	mm^3	10456	mL
V1	Total volume of the Core trunk:		1714370.5	mm^3	1714	mL
W1	Fin Volume Component 1:		30257.9	mm^3	363	mL
C1	Length of the Chord formed for W2:		2.3	mm	0.089	Inch
W2	Fin Volume Component 2:		33818.5	mm^3	406	mL
	Available Volume:		7,672.17	mm^3	= 8.0	L
	D1	Lateral distance across fin bottom in mm		0.223	inches	(D2+0.031")
2.9	D2	Lateral distance across fin top in mm		0.113	inches	
0.113						

			Outer	Inner
			Intermediate Terms	
	Calculated Theta-T in radians	0.0217	1.246138 degrees	0.999
	Calculated (Theta-T+Theta-B) in radians	0.1062	6.084127 degrees	0.978
	Calculated Theta-B in radians	0.0844	4.837989 degrees	
	Calculated fin Wall Angle in radians	-1.5352	-87.96252 degrees	39.2684 -1.397
			36192.22	5934.284
			44.28434	0.035809
			5.6642	

FIG. 13

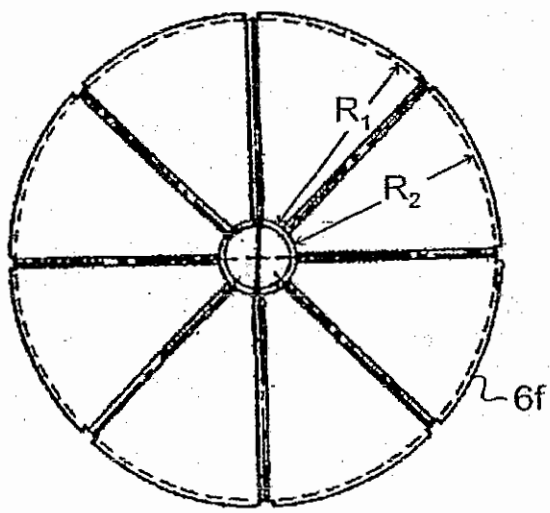

FIG. 14

66.0	R2	Outer Radius of the Core in mm	2.598	inches				
65.0	R1	Inner Radius in mm	2.561	inches				
	Theta-T	Angle formed by one-half the top fin surface in radians	0.0000		0	degrees		
	Theta-B	Angle formed by one-half the bottom fin surface in radians	0.0000		0	degrees		
764.3	L	Length of the Core in mm						
30090								
V2	Total volume of the Cylinder:		10455661.2	mm^3	10456	mL		
V1	Total volume of the Core trunk:		10159968.6	mm^3	10160	mL	Outer	Inner
W1	Fin Volume Component 1:		0.0	mm^3	0	mL	0	0
C1	Length of the Chord formed for W2:		0.0	mm	0.000	inch		
W2	Fin Volume Component 2:		0.0	mm^3	0	mL	0	0
	Available Volume:		295.69	mm^3	=	0.3	L	
	D1	Lateral distance across fin bottom in mm	0.000	inches	(D2+0.031")	0.0000		
0.0	D2	Lateral distance across fin top in mm	0.000	inches				
0.0000								
							Intermediate Terms	
	Calculated Theta-T in radians		0.0000		0	degrees	1.000	
	Calculated (Theta-T+Theta-B) in radians		0.0000		0	degrees	1.000	
	Calculated Theta-B in radians		0.0000		0	degrees		
	Calculated fin Wall Angle in radians		#DIV/0!		#DIV/0!	degrees	0.9398	0

FIG. 15

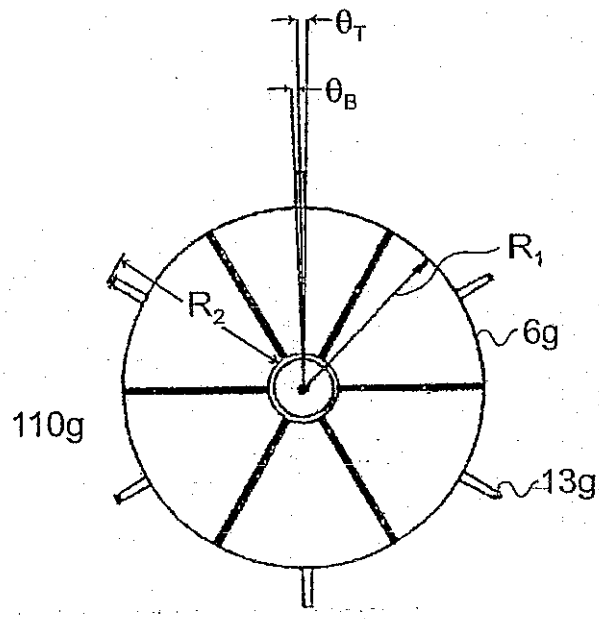

FIG. 16

66.0	R2	Outer Radius of the Core in mm	2.598	inches	5.196		
54.5	R1	Inner Radius in mm	2.145	inches	4.29		
	Theta-T	Angle formed by one-half the top fin surface in radians	0.0160	0.91527174	degrees		
	Theta-B	Angle formed by one-half the bottom fin surface in radians	0.0106	0.6074527	degrees		
382.1	L	Length of the Core in mm					
V2	Total volume of the Cylinder:	5227135.7 mm^3	5227 mL				
V1	Total volume of the Core trunk:	3563198.9 mm^3	3563 mL		Outer	Inner	
W1	Fin Volume Component 1:	4230.4 mm^3	51 mL		13289.58	9059.154	
C1	Length of the Chord formed for W2:	0.6 mm	0.023 inch				
W2	Fin Volume Component 2:	1269.6 mm^3	15 mL		3.32305	0.000295	
	Available Volume:	1,597,941 mm^3	= 1.6 L				
	D1	Lateral distance across fin bottom in mm	0.114 inches	(D2+0.031")	2.8956		
2.1	D2	Lateral distance across fin top in mm	0.083 inches				
0.083					Intermediate Terms		
	Calculated Theta-T in radians	0.0160	0.915272	degrees	0.999		
	Calculated (Theta-T+Theta-B) in radians	0.0266	1.522724	degrees	0.999		
	Calculated Theta-B in radians	0.0106	0.607453	degrees			
	Calculated fin Wall Angle in radians	-1.5366	-88.04031	degrees	11.5062	-0.3937	

FIG. 17

66.0	R2	Outer Radius of the Core in mm		2.598 inches			
54.5	R1	Inner Radius in mm		2.145 inches			
	Theta-T	Angle formed by one-half the top fin surface in radians		0.2521	14.4433492 degrees		
	Theta-B	Angle formed by one-half the bottom fin surface in radians		0.0625	3.57949303 degrees		
382.1	L	Length of the Core in mm					
V2	Total volume of the Cylinder:		5227135.7 mm^3	5227 mL			
V1	Total volume of the Core trunk:		3561538.0 mm^3	3562 mL		Outer	Inner
W1	Fin Volume Component 1:		66824.5 mm^3	802 mL		209714.8	142890.4
C1	Length of the Chord formed for W2:		3.4 mm	0.134 inch			
W2	Fin Volume Component 2:		7405.1 mm^3	89 mL		19.44062	0.060277
	Available Volume:		4.84 mm^3	= 0.8 L			
	D1	Lateral distance across fin bottom in mm		1.327 inches	(D2+0.031")	33.7058	
32.9	D2	Lateral distance across fin top in mm		1.296 inches			
1.296						Intermediate Terms	
	Calculated Theta-T in radians		0.2521	14.44335 degrees		0.876	
	Calculated (Theta-T+Theta-B) in radians		0.3146	18.02284 degrees		0.809	
	Calculated Theta-B in radians		0.0625	3.579493 degrees			
	Calculated fin Wall Angle in radians		-1.5366	-88.04247 degrees		11.5189	-0.3937

FIG. 18

66.0	R2	Outer Radius of the Core in mm	2.598	inches	5.196	
54.5	R1	Inner Radius in mm	2.145	inches	4.29	
	Theta-T	Angle formed by one-half the top fin surface in radians	0.3640		20.8573877	degrees
	Theta-B	Angle formed by one-half the bottom fin surface in radians	0.0899		5.14837464	degrees
382.1	L	Length of the Core in mm				

V2	Total volume of the Cylinder:	5227135.7	mm^3	5227	mL	
V1	Total volume of the Core trunk:	3563198.9	mm^3	3563	mL	Outer Inner
W1	Fin Volume Component 1:	96403.8	mm^3	1157	mL	302845.5 206441.7
C1	Length of the Chord formed for W2:	4.9	mm	0.193	Inch	
W2	Fin Volume Component 2:	10511.8	mm^3	126	mL	27.69047 0.179394
	Available Volume:	80195	mm^3	[redacted]		

	D1	Lateral distance across fin bottom in mm	1.881	inches	(D2+0.031")
47.0	D2	Lateral distance across fin top in mm	1.850	inches	
1.850					

				Intermediate Terms	
	Calculated Theta-T in radians	0.3640	20.85739	degrees	0.746
	Calculated (Theta-T+Theta-B) in radians	0.4539	26.00576	degrees	0.616
	Calculated Theta-B in radians	0.0899	5.148375	degrees	
	Calculated fin Wall Angle in radians	-1.5366	-88.04031	degrees	11.5062 -0.3937

FIG. 19

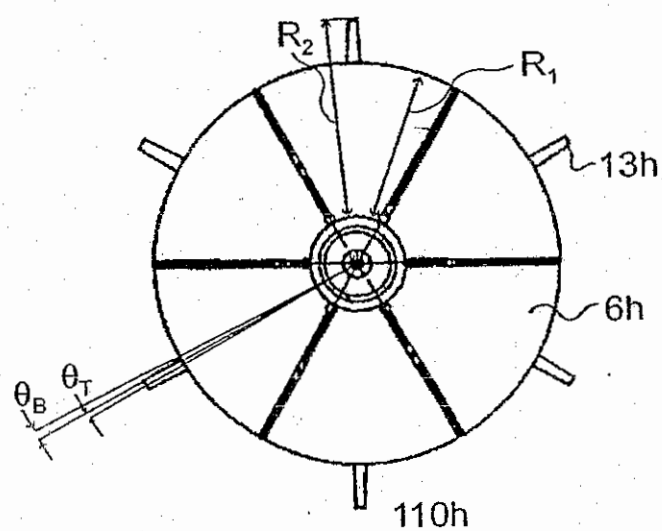

FIG. 20

66.0	R2	Outer Radius of the Core in mm	2.598	inches		
54.5	R1	Inner Radius in mm	2.145	inches		
	Theta-T	Angle formed by one-half the top fin surface in radians	0.0219	1.25716763 degrees		
	Theta-B	Angle formed by one-half the bottom fin surface in radians	0.0119	0.6802237 degrees		
300.5	L	Length of the Core in mm				
V2	Total volume of the Cylinder:	5205244.4 mm^3	5205 mL			
V1	Total volume of the Core trunk:	3546622.3 mm^3	3547 mL		Outer	Inner
W1	Fin Volume Component 1:	5792.1 mm^3	70 mL		18177.4	12385.27
C1	Length of the Chord formed for W2:	0.6 mm	0.025 inch			
W2	Fin Volume Component 2:	1416.9 mm^3	17 mL		3.724271	0.000414
	Available Volume	[illegible]	1.6 L			
	D1	Lateral distance across fin bottom in mm	0.145 inches	(D2+0.031")	[illegible]	
2.9	D2	Lateral distance across fin top in mm	0.114 inches			
0.114					Intermediate Terms	
	Calculated Theta-T in radians	0.0219	1.257168 degrees		0.999	
	Calculated (Theta-T+Theta-B) in radians	0.0338	1.937391 degrees		0.998	
	Calculated Theta-B in radians	0.0119	0.680224 degrees			
	Calculated fin Wall Angle in radians	-1.5366	-88.04247 degrees		11.5189	-0.3937

FIG. 21

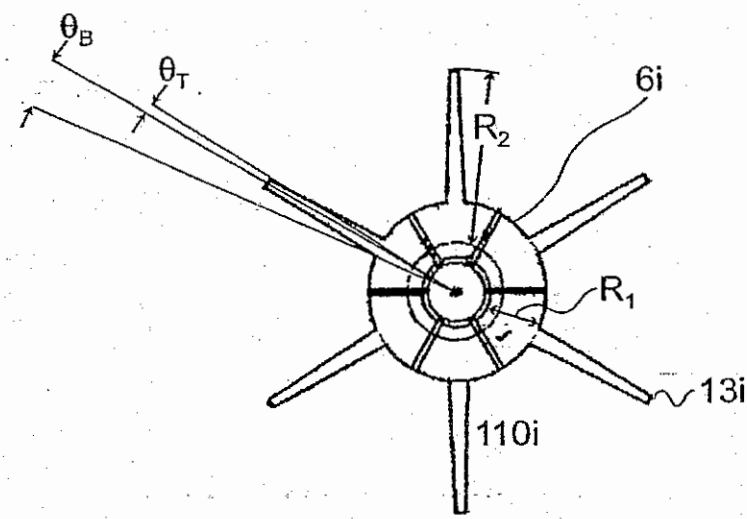

FIG. 22

[illegible]	R2	Outer Radius of the Core in mm	2.598 inches	[illegible]		
[illegible]	R1	Inner Radius in mm	1.052 inches	[illegible]		
	Theta-T	Angle formed by one-half the top fin surface in radians	[illegible]	1.2461381 degrees		
	Theta-B	Angle formed by one-half the bottom fin surface in radians	[illegible]	7.30918223 degrees		
382.1	L	Length of the Core in mm				
[illegible]						
V2	Total volume of the Cylinder:	5227135.7 mm^3	5227 mL			
V1	Total volume of the Core trunk:	857071.3 mm^3	857 mL		Outer	Inner
W1	Fin Volume Component 1:	15127.0 mm^3	182 mL		18093.7	2966.748
C1	Length of the Chord formed for W2:	3.4 mm	0.134 inch			
W2	Fin Volume Component 2:	25506.7 mm^3	306 mL		66.87882	0.123425
	Available Volume	[illegible]	3.9 L			
	D1	Lateral distance across fin bottom in mm	0.313 inches	(D2+0.031")	[illegible]	
2.9	D2	Lateral distance across fin top in mm	0.113 inches			
[illegible]					Intermediate Terms	
	Calculated Theta-T in radians	0.0217	1.246138 degrees		0.999	
	Calculated (Theta-T+Theta-B) in radians	0.1493	8.55532 degrees		0.956	
	Calculated Theta-B in radians	0.1276	7.309182 degrees			
	Calculated fin Wall Angle in radians	-1.5062	-86.29909 degrees		39.2684	-2.54

FIG. 23

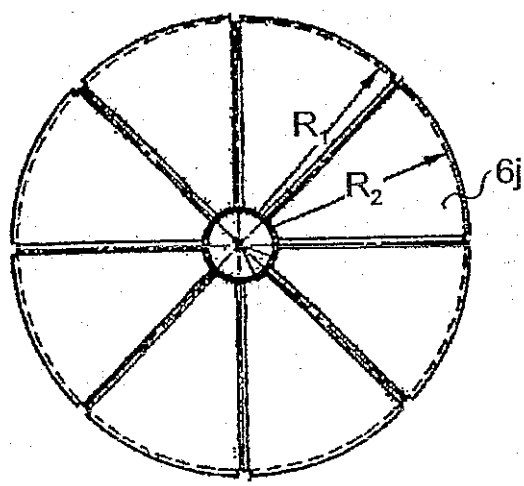

FIG. 24

66.0	R2	Outer Radius of the Core in mm	2.598	inches				
65.0	R1	Inner Radius in mm	2.561	inches				
	Theta-T	Angle formed by one-half the top fin surface in radians	0.0000		0	degrees		
	Theta-B	Angle formed by one-half the bottom fin surface in radians	0.0000		0	degrees		
382.1	L	Length of the Core in mm						
1.5048								
V2	Total volume of the Cylinder:		5227135.7	mm^3	5227	mL		
V1	Total volume of the Core trunk:		5079309.0	mm^3	5079	mL	Outer	Inner
W1	Fin Volume Component 1:		0.0	mm^3	0	mL	0	0
C1	Length of the Chord formed for W2:		0.0	mm	0.000	inch		
W2	Fin Volume Component 2:		0.0	mm^3	0	mL	0	0
	Available Volume:		147.83	mm^3	=	0%	L	
	D1	Lateral distance across fin bottom in mm	0.000	inches	(D2+0.031")	0.0000		
0.0	D2	Lateral distance across fin top in mm	0.000	inches				
1.0000								
							Intermediate Terms	
	Calculated Theta-T in radians		0.0000		0	degrees	1.000	
	Calculated (Theta-T+Theta-B) in radians		0.0000		0	degrees	1.000	
	Calculated Theta-B in radians		0.0000		0	degrees		
	Calculated fin Wall Angle in radians		#DIV/0!		#DIV/0!	degrees	0.9398	0

FIG. 25

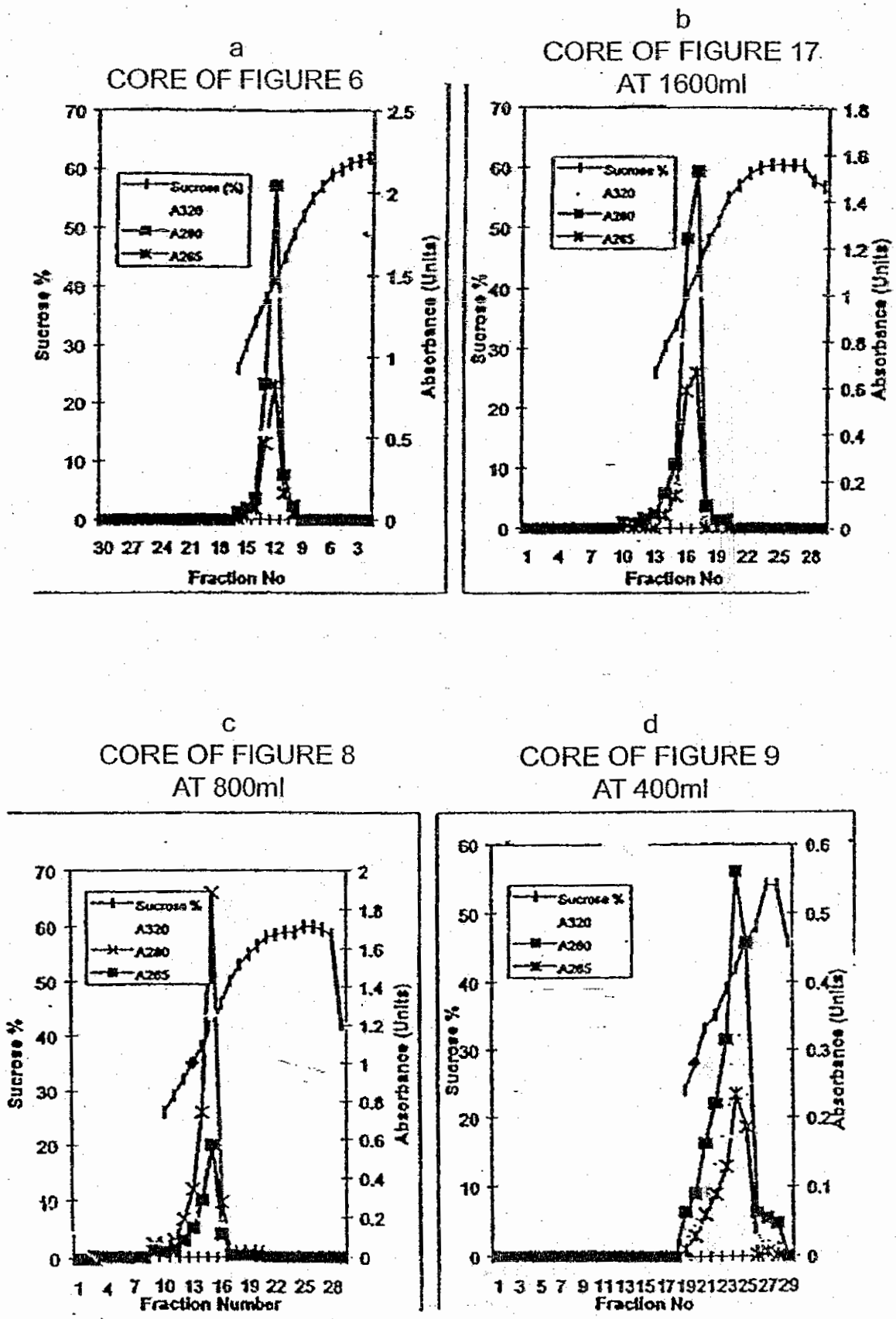
a
CORE OF FIGURE 6
b
CORE OF FIGURE 17
AT 1600ml
c
CORE OF FIGURE 8
AT 800ml
d
CORE OF FIGURE 9
AT 400ml
Sucrose %
Absorbance (Units)
Fraction No
Fraction Number
A320
A280
A265

FIG. 26