FIG. 1A

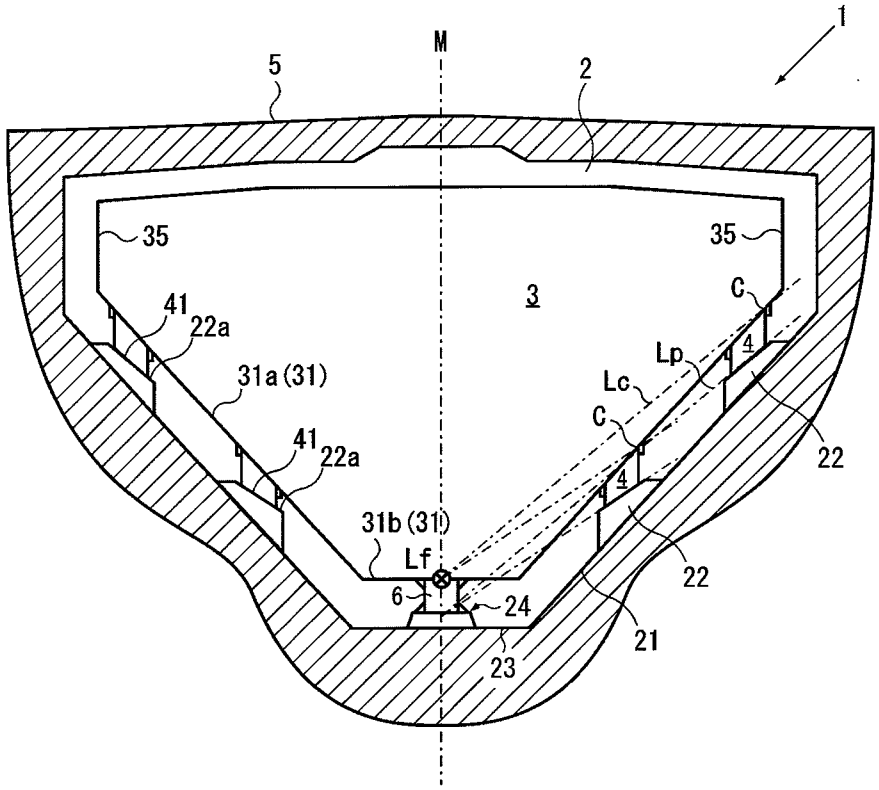
1
M
5
2
35
35
3
C
41
22a
Lp
4
31a (31)
Lc
C
41
22a
22
4
31b (31)
Lf
22
6
24
21
23

FIG. 1B

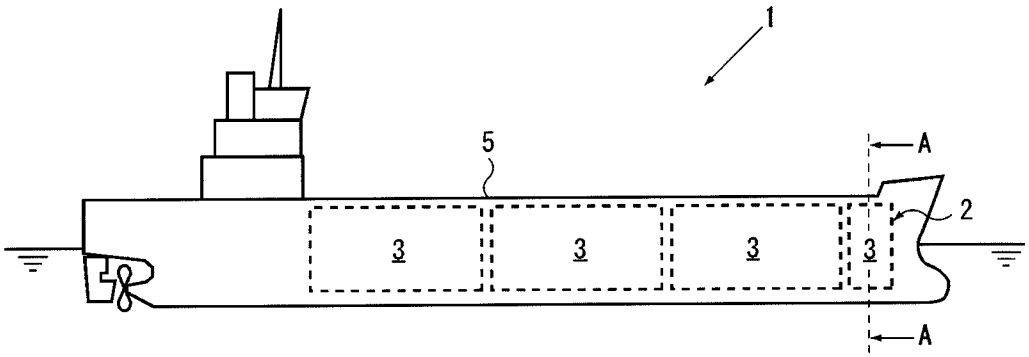

FIG. 2A

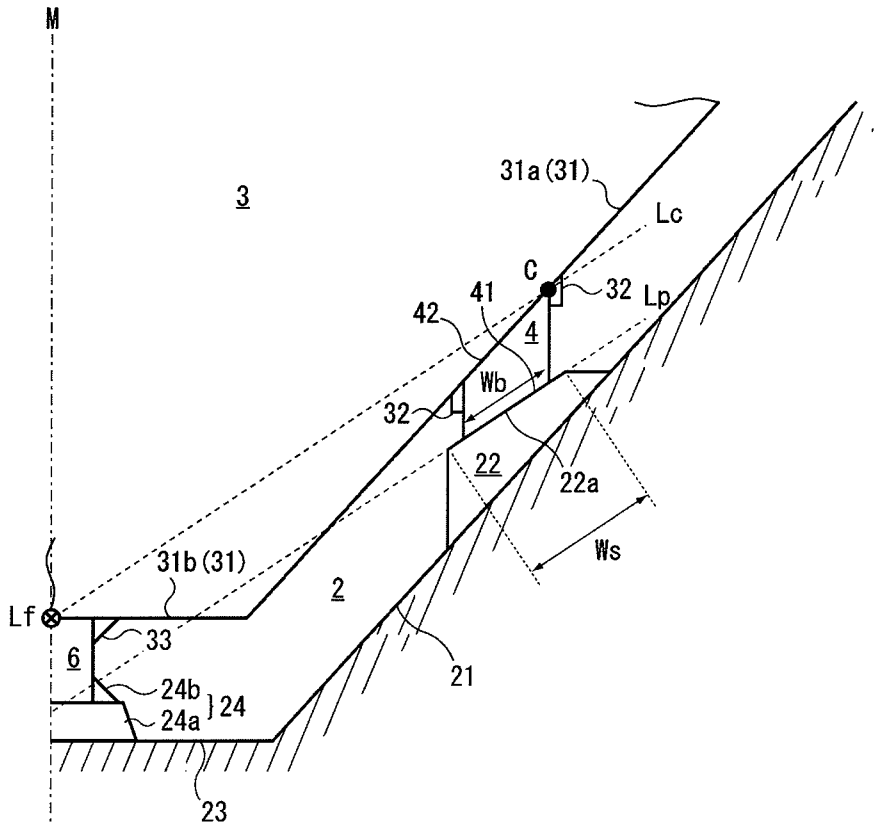
M
3
31a (31)
Lc
C
41
32
Lp
42
4
Wb
32
22
22a
Ws
31b (31)
Lf
2
33
6
24b
24a
24
21
23

FIG. 2B

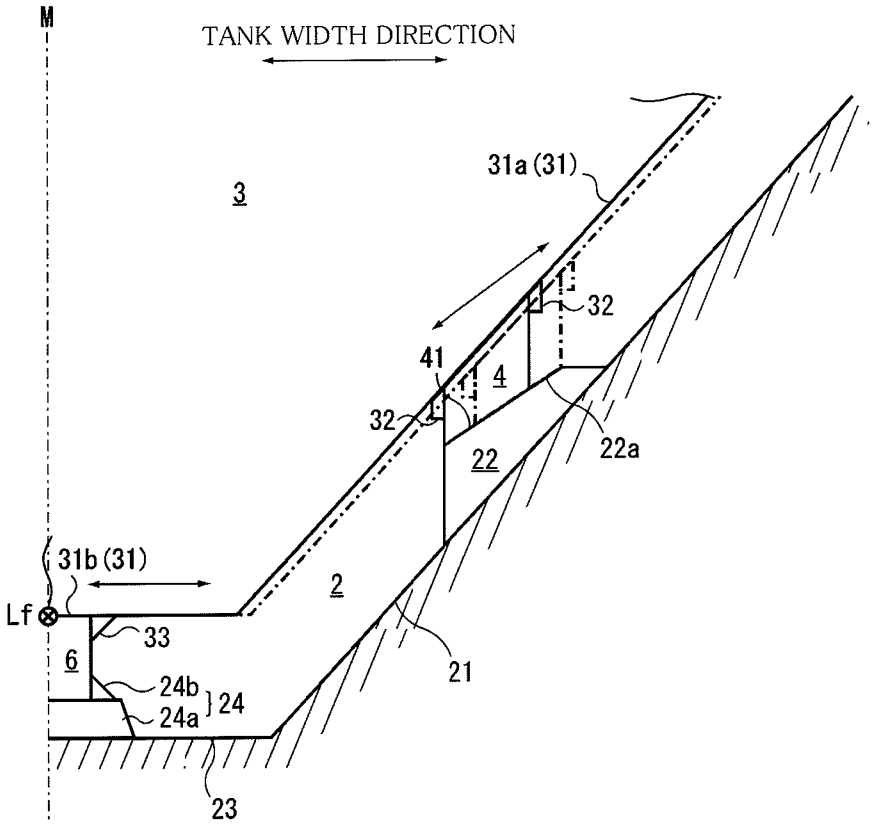
M
TANK WIDTH DIRECTION
3
31a (31)
32
41
4
32
22
22a
31b (31)
2
Lf
33
6
24b
24a
24
21
23

FIG. 3A

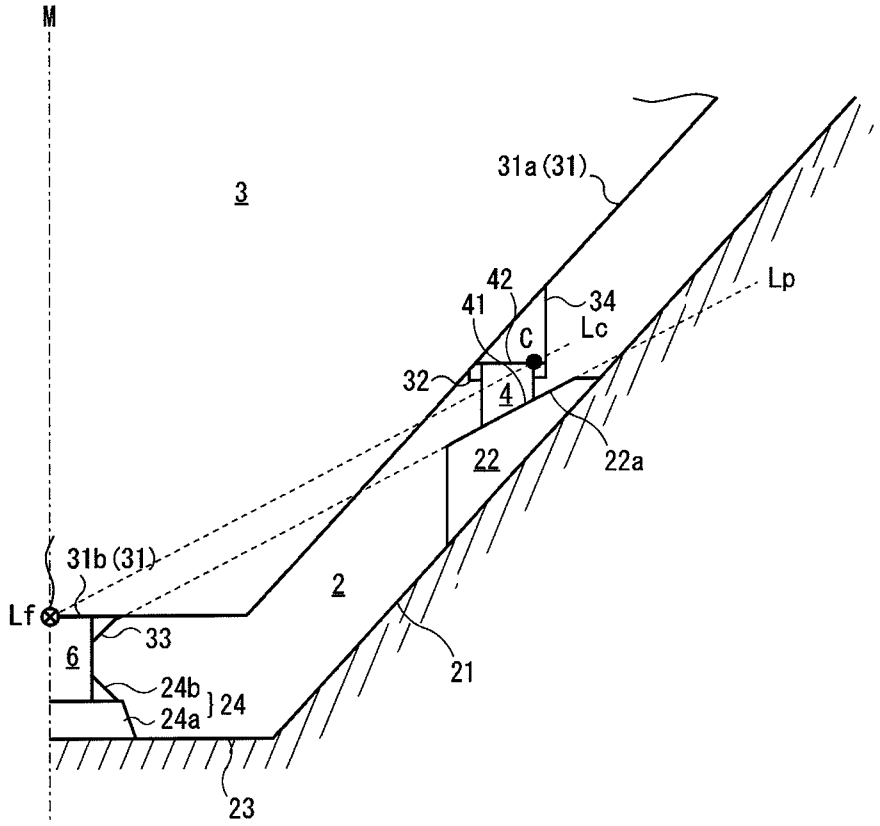

FIG. 3B

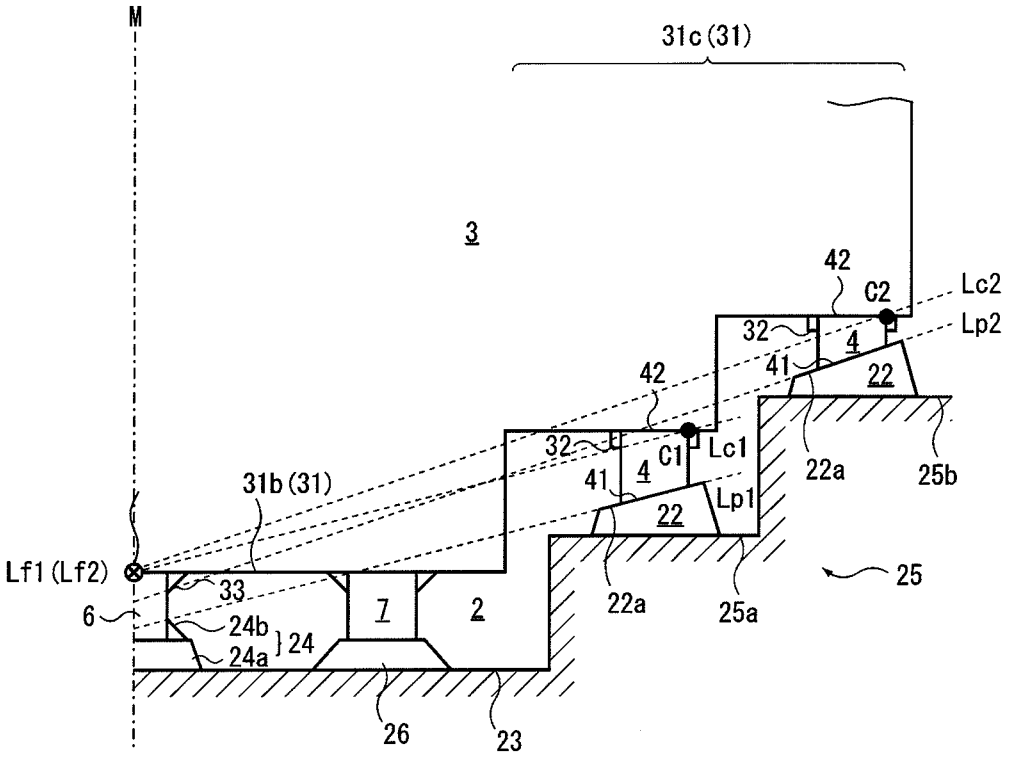
M
31c(31)
3
42
C2
Lc2
Lp2
32
4
41
22
42
32
C1
Lc1
4
41
Lp1
22
22a
25b
31b(31)
Lf1 (Lf2)
33
6
24b
24a
24
7
2
22a
25a
25
26
23

FIG. 4A

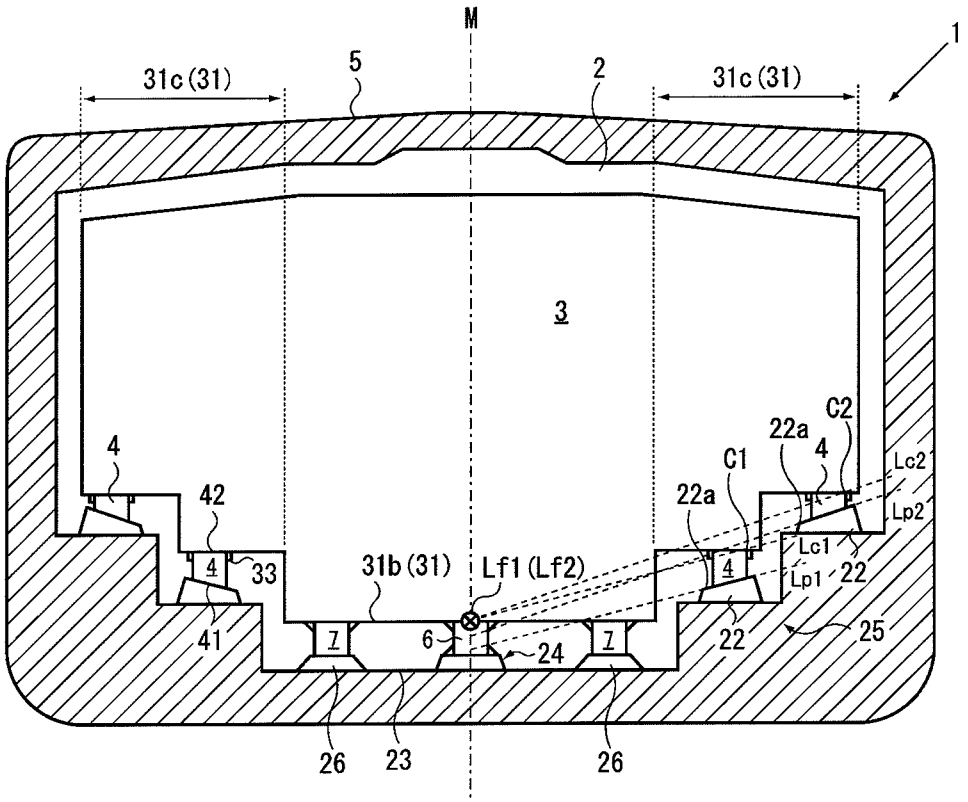
M
1
31c (31)
5
2
31c (31)
3
4
42
33
41
31b (31)
Lf1 (Lf2)
6
24
26
23
26
22a
C1
22a
4
C2
Lc2
Lp2
Lc1
Lp1
22
22
25

FIG. 4B

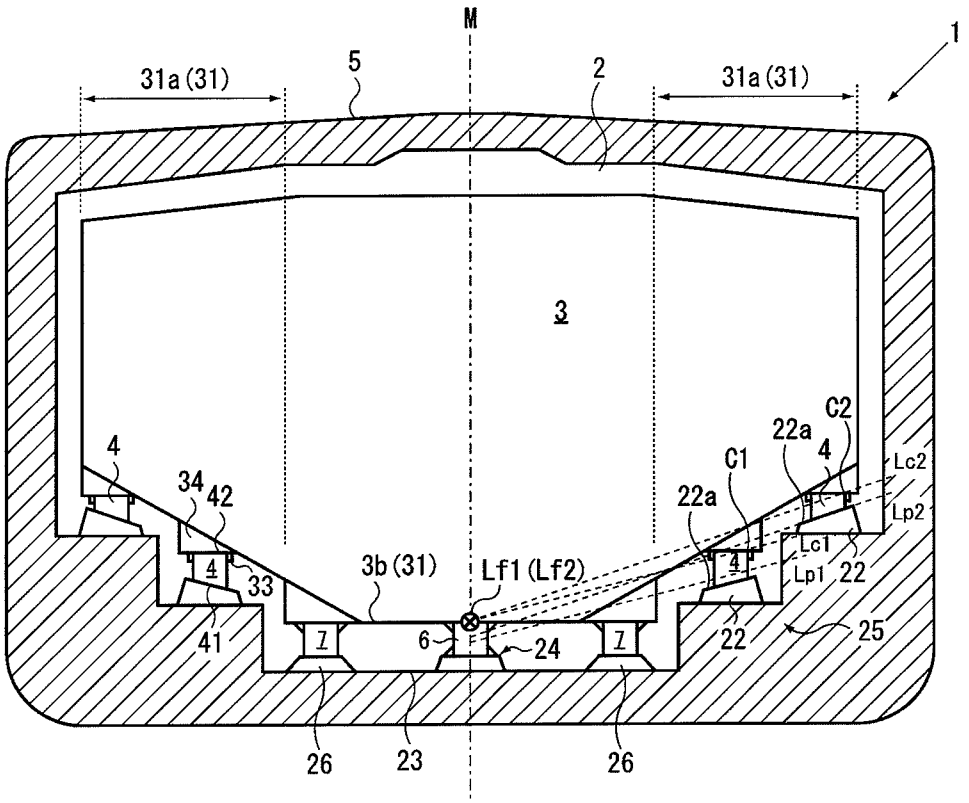
M
1
31a (31)
5
2
31a (31)
3
4
34
42
33
41
3b (31)
Lf1 (Lf2)
6
24
26
23
26
22a
C1
22a
4
C2
Lc2
Lp2
Lc1
Lp1
22
22
25

FIG. 5A

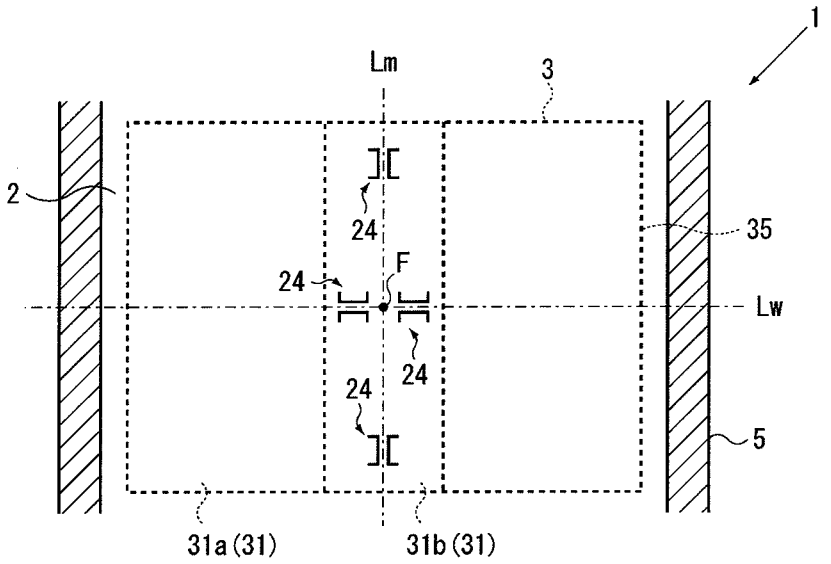

FIG. 5B

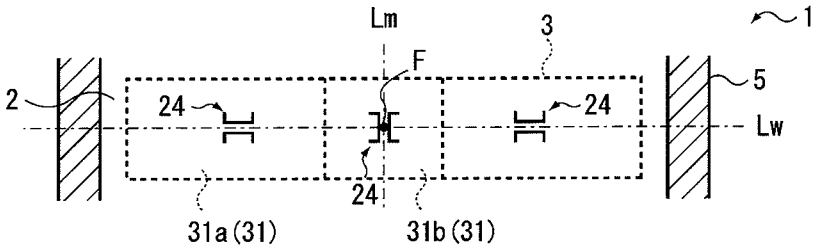

FIG. 5C

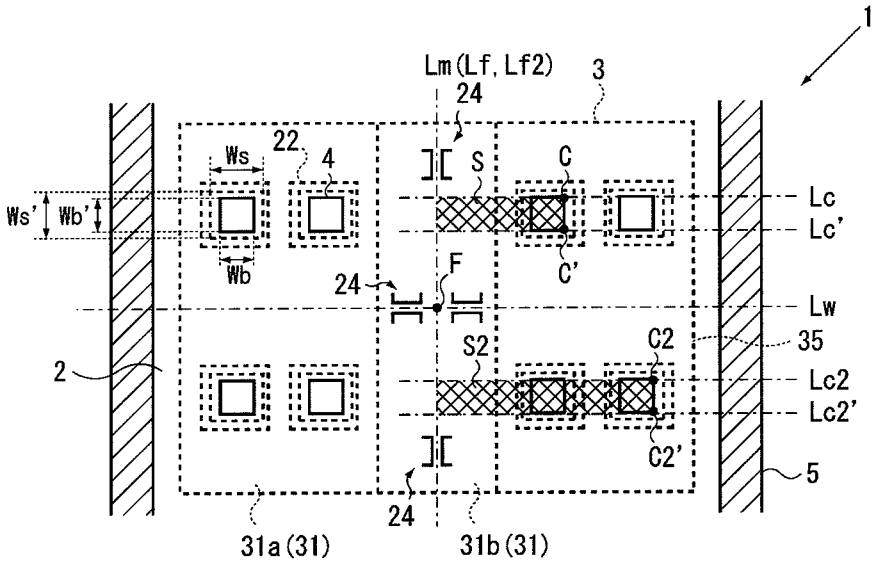
1
Lm(Lf, Lf2)
3
24
22
4
Ws
Ws'
Wb'
Wb
S
C
C'
Lc
Lc'
24
F
Lw
C2
35
S2
2
Lc2
Lc2'
C2'
5
24
31a(31)
31b(31)

FIG. 6A

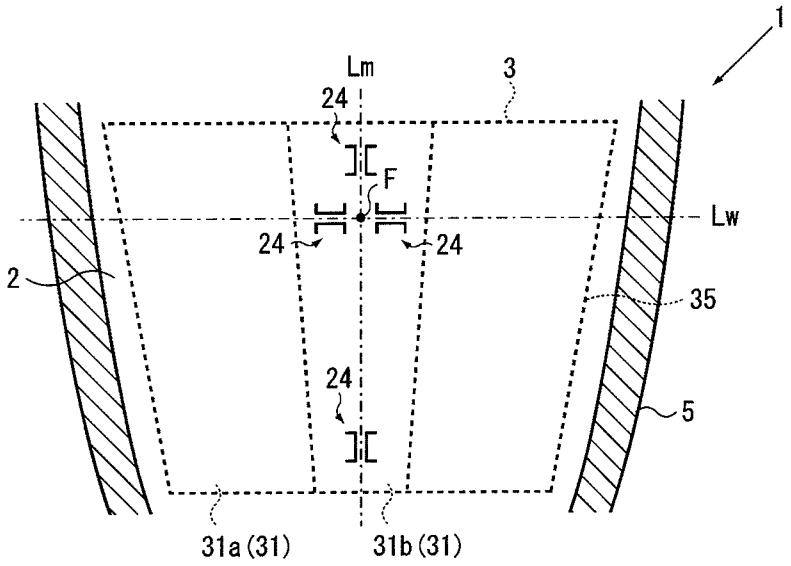

FIG. 6B

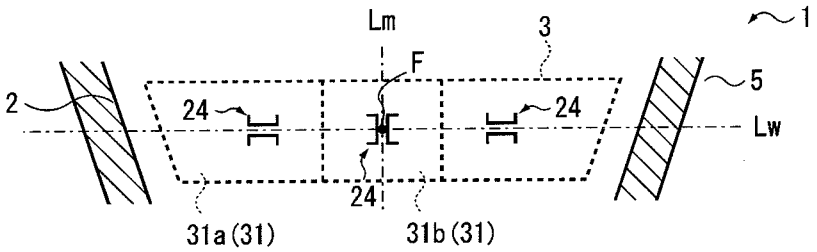

FIG. 6C

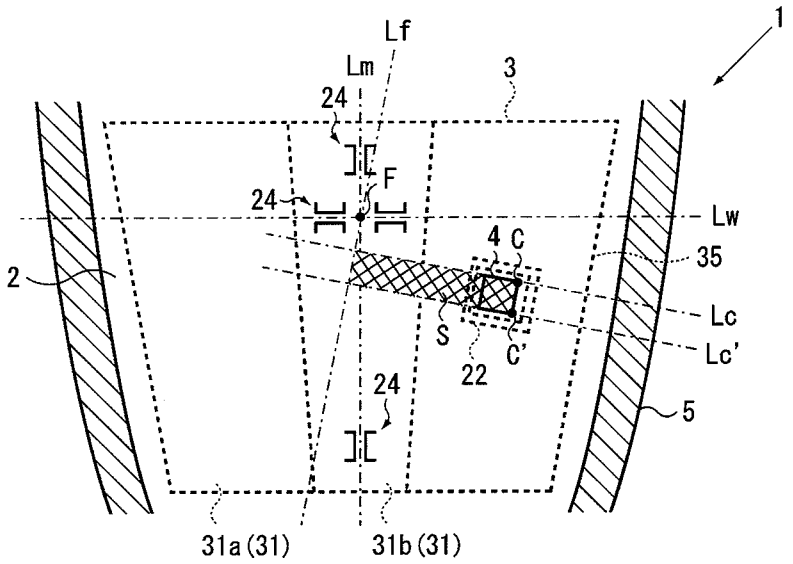

FIG. 6D

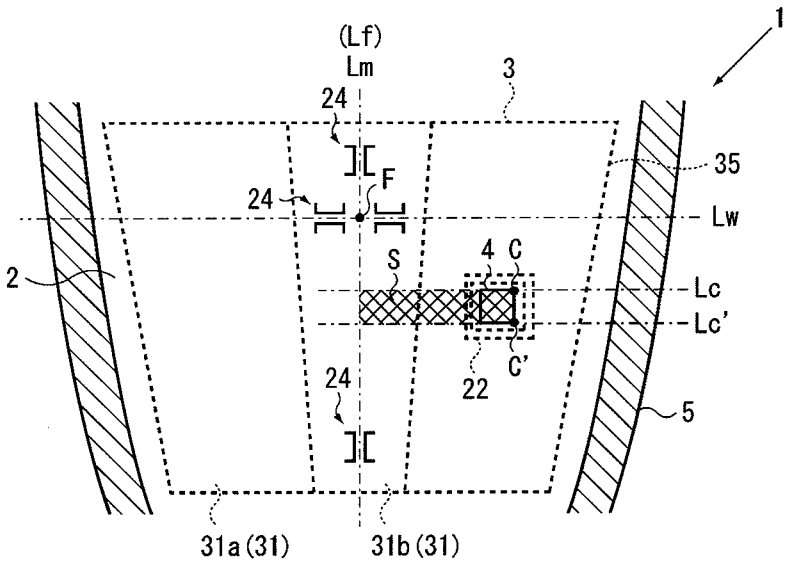

FIG. 7A

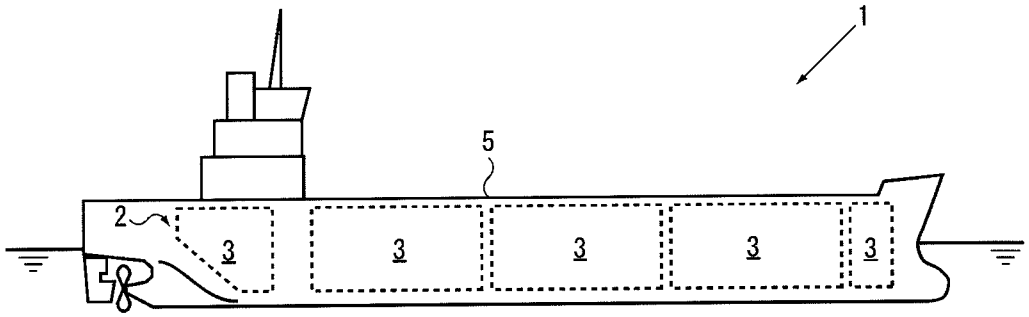

FIG. 7B

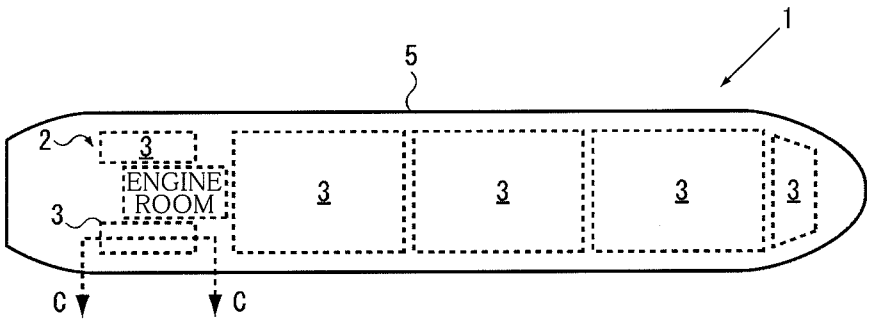

FIG. 7C

