(12) INTERNATIONAL APPLICATION PUBLISHED UNDER THE PATENT COOPERATION TREATY (PCT)

(19) World Intellectual Property Organization
International Bureau

(43) International Publication Date
02 October 2025 (02.10.2025)

WIPO | PCT

(10) International Publication Number
WO 2025/207699 A1

(51) International Patent Classification:
A61F 9/00 (2006.01)

(21) International Application Number:
PCT/US2025/021434

(22) International Filing Date:
26 March 2025 (26.03.2025)

(25) Filing Language: English

(26) Publication Language: English

(30) Priority Data:
63/570,372 27 March 2024 (27.03.2024) US

(71) Applicant: **GENENTECH, INC.** [US/US]; 1 Dna Way, South San Fransisco, CA 94080-4990 (US).

(72) Inventors: **CHAPMAN, Cody**; 1216 Arch Street, 7th Floor, Philadelphia, PA 19107 (US). **CREEL, Justin, Anthony**; 2200 Renaissance Blvd., Suite 410, King Of Prussia, PA 19406 (US). **GARBERMAN, Brett**; 1216 Arch Street, 7th Floor, Philadelphia, PA 19107 (US). **GARCIA, Eduardo**; 1216 Arch Street, 7th Floor, Philadelphia, PA 19107 (US). **CAMACHO GONZALEZ, Sergio, Alberto**; 2200 Renaissance Blvd., Suite 410, King Of Prussia, PA 19406 (US). **HEDGELAND, Mark, James**; 2200 Renaissance Blvd., Suite 410, King Of Prussia, PA 19406 (US). **KEANE, Michael**; 250 Truman Way, Downingtown, PA 19335 (US). **LECHMAN, Tim**; 1216 Arch Street, 7th Floor, Philadelphia, PA 19107 (US). **MEINZ, Peter, James**; 40 Sam Fonzo Drive, Beverly, MA 01915 (US). **MEYER, Thomas, E.**; 2200 Renaissance Blvd., Suite 410, King Of Prussia, PA 19406 (US). **MITCHEL, Ed**; 1216 Arch Street, 7th Floor, Philadelphia, PA 19107 (US). **PHELAN, Christopher, T.**; 1216 Arch Street, 7th Floor, Philadelphia, PA 19107 (US). **SCHIFF, David, Robert**; 1216 Arch Street, 7th Floor, Philadelphia, PA 19107 (US). **VAN ROYEN, Donald, Fraser**; 1216 Arch Street, 7th Floor, Philadelphia, PA 19107 (US). **WISBER, Pete**; 1216 Arch Street, 7th Floor, Philadelphia, PA 19107 (US). **WOOLEY, Chase, Barrett**; 8001 Vine Crest Ave., Suite 4, Louisville, KY 40222 (US).

(74) Agent: **SIDERITS, Jonathan M.** et al.; Frost Brown Todd LLP, 3300 Great American Tower, 301 East Fourth Street, Cincinnati, OH 45202 (US).

(81) Designated States *(unless otherwise indicated, for every kind of national protection available)*: AE, AG, AL, AM, AO, AT, AU, AZ, BA, BB, BG, BH, BN, BR, BW, BY, BZ, CA, CH, CL, CN, CO, CR, CU, CV, CZ, DE, DJ, DK, DM, DO, DZ, EC, EE, EG, ES, FI, GB, GD, GE, GH, GM, GT, HN, HR, HU, ID, IL, IN, IQ, IR, IS, IT, JM, JO, JP, KE, KG, KH, KN, KP, KR, KW, KZ, LA, LC, LK, LR, LS, LU, LY,

(54) Title: TORQUE RING FOR SUBRETINAL INJECTION DEVICE

(57) Abstract: An apparatus includes an instrument body and a flexible cannula extending distally from the instrument body that is sized and configured to advance between a sclera and a choroid of a patient's eye. The apparatus also includes a needle that is configured to translate relative to the cannula between a proximal position and a distal position. The apparatus further includes a rotary knob (422) configured to rotate relative to the instrument body about a rotational axis and thereby drive translation of the needle between the proximal and distal positions. The apparatus also includes a deflectable member (460) fixed against rotation relative to one of the instrument body or the rotary knob. The deflectable member is configured to frictionally engage the other of the instrument body or the rotary knob to prevent rotation of the rotary knob about the rotational axis absent application of a predetermined threshold rotational force to the rotary knob.

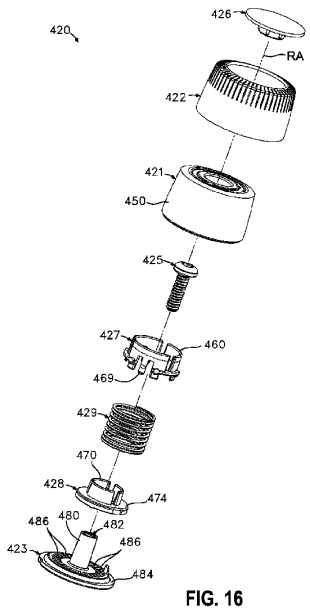

FIG. 16

WO 2025/207699 A1

[Continued on next page]

MA, MD, MG, MK, MN, MU, MW, MX, MY, MZ, NA, NG, NI, NO, NZ, OM, PA, PE, PG, PH, PL, PT, QA, RO, RS, RU, RW, SA, SC, SD, SE, SG, SK, SL, ST, SV, SY, TH, TJ, TM, TN, TR, TT, TZ, UA, UG, US, UY, UZ, VC, VN, WS, ZA, ZM, ZW.

(84) **Designated States** *(unless otherwise indicated, for every kind of regional protection available)*: ARIPO (BW, CV, GH, GM, KE, LR, LS, MW, MZ, NA, RW, SC, SD, SL, ST, SZ, TZ, UG, ZM, ZW), Eurasian (AM, AZ, BY, KG, KZ, RU, TJ, TM), European (AL, AT, BE, BG, CH, CY, CZ, DE, DK, EE, ES, FI, FR, GB, GR, HR, HU, IE, IS, IT, LT, LU, LV, MC, ME, MK, MT, NL, NO, PL, PT, RO, RS, SE, SI, SK, SM, TR), OAPI (BF, BJ, CF, CG, CI, CM, GA, GN, GQ, GW, KM, ML, MR, NE, SN, TD, TG).

Published:

— *with international search report (Art. 21(3))*

— *before the expiration of the time limit for amending the claims and to be republished in the event of receipt of amendments (Rule 48.2(h))*