MOTOR DRIVEN FLUID COMPRESSOR

This Sheet Has Been Replaced

RTMP

This invention relates to a fluid compressor, and more particularly to a motor driven fluid compressor having the compression and drive mechanisms within a hermetically sealed container.

Motor driven fluid compressors having the compression and drive mechanisms within a hermetically sealed housing are known in the art. For example, Japanese Patent Application Publication No.2-215982 discloses a motor driven fluid compressor which is shown in Figure 1. The compression mechanism includes a fixed scroll 201 having first circular end plate and first spiral element downwardly extending from a lower end surface of the first circular end plate. An outer peripheral wall downwardly extending from a peripheral portion of one end surface of the first circular end plate is connected to a first inner block 215. The compression mechanism further includes an orbiting scroll 202 which is disposed in a hollow space defined by the fixed scroll 201 and the first inner block 215. The orbiting scroll 202 includes a second circular end plate and a second spiral element upwardly extending from an upper end surface of the orbiting scroll. The first and second spiral elements interfit with a radial any angular offset.

The drive mechanism includes a drive shaft 211 and a motor

This Sheet Has Been Replaced



THIS SHEET REPLACED

driving the drive shaft. The drive shaft includes a pin member which upwardly extends from and is integral with a top end of the drive shaft 211. The pin member is operatively connected the orbiting scroll 202. A rotation preventing mechanism is disposed between the orbiting scroll 202 and the first inner block 215 so that the orbiting scroll 202 only orbits during rotation of the drive shaft 211. A lower and surface of the second circular end plate of the orbiting scroll radially slides on an upper end surface of the first inner block 215 during orbital motion of the orbiting scroll 202. A second inner block 216 located below the first inner block 215 includes a central bore through which the drive shaft 211 passes. An upper end portion of drive shaft 211 is rotatably supported by the second inner block by a bearing which is disposed within a central bore. Inlet pipe 203 is hermetically connected to a side wall of the housing at a portion which is below the second inner block, so as to conduct the refrigerant gas from one external element of a cooling circuit, such as an evaporator(not shown) to an inner hollow space of the housing.

A valved discharge port 207 is axially formed through a central portion of the first circular plate of the fixed scroll. An outlet pipe 208 hermetically penetrates through a top end of the housing and is connected to the valved discharge port 207 at its inner end so as to conduct the discharged refrigerant gas to another external element of the cooling circuit, such as a condenser (not shown). An axial channel is formed between one peripheral ends of the first end second inner blocks 215 and 216, and the inner side surface of the housing.

This Sheet Has Been Replaced

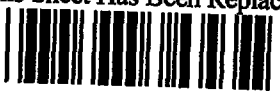

THIS SHEET WAS NOT REPLACED

However, to reduce the radial size of compressor is difficult while a displacement of compressing is maintained the constant, that is, without reducing the out side diameter of scroll member because such a compressor should have any gas channel space of radial direction between compression space 213 and casing 200.

Furthermore, in generally, to reduce number of parts and the weight of body are require for a compressor. Such compressor have comparatively many number of parts and is not suitable for lightweighting of body.

It is an object of the present invention to easily reduce a radial size of motor driven fluid compressor having the compression and drive mechanisms within a hermetically sealed container.

It is another object of the present invention to assemble a motor driven fluid compressor having the compression and drive mechanisms within a hermetically sealed container under a fewer parts using and more lightweighting.

A compressor according to this invention includes a drive shaft supported at both ends by bearing and having an axial bore linked to at least one radial bore leading to the first cavity The bearing portion forcibly inserted in the drive shaft as part of cylindrical portion is formed between a compression mechanism part and a motor part and have at least one gas passage which links two above parts

One end of drive shaft includes the open end of the axial

This Sheet Has Been Replaced



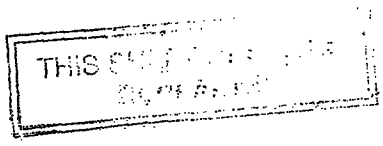

bore and linked to the inlet port formed in casing.

The other side of the drive shaft extends into the bush and is projected with projection pin.

A fixed scroll and orbiting scroll are disposed within a hermetically sealed housing. The fixed scroll includes an end plate from which a first wrap or spiral element extends into interior of the housing. The end plate of fixed scroll divides the housing into a discharge chamber and a suction chamber.

The first spiral element is located into second cavity. An orbiting scroll includes an end plate from which a second wrap or spiral element extends. The first and second spiral element interfit at an angular and radial offset to form a plurality of line contacts which define at least one pair of sealed off fluid pockets.

The drive mechanism operatively connected to the orbiting scroll to effect orbital motion thereof. A rotation prevention device prevents the rotation of the orbital scroll during orbital motion so that volume of fluid pockets charges to compress the fluid in the pockets inwardly from the outermost pocket towards the central pocket. The compressed gas flows out of the central pocket through a channel in the end plate of the fixed scroll and into a discharge chamber.

In operation, a refrigerant gas is introduced into first cavity from a inlet port through a axial bore and a radial bore of the drive shaft.

The refrigerant gas introduced into second cavity through gas passage is taken into outer sealed fluid pockets between fixed scroll and orbiting scroll, and move towards the central

This Sheet Has Been Replaced



THIS

pocket, it undergoes a resultant volume reduction and compression and is discharged to the discharge chamber through the discharge port.

Further objects, features and other aspects of this invention will be understand from detailed description of the preferred embodiments this invention with reference to annexed drawings.

In the accompanying drawings:

Figure 1 is a longitudinal sectional view of a hermetically sealed scroll type compressor in accordance with one prior art.

Figure 2 is a longitudinal sectional view of the motor driven fluid compressor in accordance with a first embodiment of the present invention.

Figure 3 is a sectional view taken substantially along line 3-3 of Figure 2.

Figure 4 is a view similar to Figure 3, illustrating a second embodiment of the present invention.

In Figure 2, for purposes of explanation only, the left side of the figure will be referenced as the forward end or front of the compressor, and the right side of the figure will be referenced as the rearward end or rear of the compressor.

With reference to Figure 2, an overall construction of motor driven fluid compressor, such as a motor driven scroll type fluid compressor 10 in accordance with a first embodiment of the present invention is shown. Compressor 10 includes compressc

This Sheet Has Been Replaced



THIS SHEET HAS BEEN REPLACED

housing 11 which contains a compression mechanism, such as scroll type fluid compression mechanism 20 and drive mechanism 30 therein. Compressor housing 11 includes cylindrical portion 111, and first and second cup-shaped portions 112 and 113. An opening end of first cup-shaped portion 112 is releasably and hermetically connected to a front opening end of cylindrical portion 111 by a plurality of bolts 12. An opening end of second cup-shaped portion 113 is releasably and hermetically connected to a rear opening end of cylindrical portion 111 by a plurality of bolts 13.

Scroll type fluid compression mechanism 20 includes fixed scroll 21 having circular end plate 21a and spiral element 21b which rearwardly extends from circular end plate 21a. Circular end plate 21a of fixed scroll 21 is fixedly disposed within first cup-shaped portion 112 by a plurality of bolts 14. Inner block 23 extends radially inwardly and is integral with the front opening end of cylindrical portion 111 of compressor housing 11 First cavity 33 is the space including motor drive mechanism 30 in the rear of compressor. Second cavity 34 is the space including rotation preventing mechanism 24 and fluid compression mechanism 20 in the front of compressor. Scroll type fluid compression mechanism 20 further includes orbiting scroll 22 having circular end plate 22a and spiral element 22b which forwardly extends from circular end plate 22a. Spiral element 21b of fixed scroll 21 interfits with spiral element 22b of orbiting scroll 22 with an angular and radial offset.

Seal element 211 is disposed at an end surface of spiral element 21b of fixed scroll 21 so as to seal the mating surfaces of spiral element 21b of fixed scroll 21 and circular end plate

This Sheet Has Been Replaced



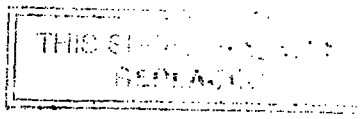

22a of orbiting scroll 22. Similarly, seal element 221 is disposed at an end surface of spiral element 22b of orbiting scroll 22 so as to seal the mating surfaces of spiral element 22b of orbiting scroll 22 and circular end plate 21a of fixed scroll 21. O-ring seal element 40 is elastically disposed between an outer peripheral surface of circular end plate 21a of fixed scroll 21 and an inner peripheral surface of first cup-shaped portion 112 to seal the mating surfaces of circular end plate 21a of fixed scroll 21 and first cup-shaped portion 112. Circular end plate 21a of fixed scroll 21 and first cup-shaped portion 112 define discharge chamber 50.

Circular end plate 21a of fixed scroll 21 is provided with valved discharge port 21c axially formed therethrough so as to link discharge chamber 50 to a central fluid pocket (not shown which is defined by fixed and orbiting scrolls 21 and 22. First cup-shaped portion 112 includes cylindrical projection 112a forwardly projecting from an outer surface of a bottom end section thereof. Axial hole 112b functioning as an outlet port of the compressor is centrally formed through cylindrical projection 112a so as to be connected to an inlet of one element, such as condenser (not shown) of an external cooling circuit through pipe member (not shown).

Drive mechanism 30 includes drive shaft 31 and motor 3 surrounding drive shaft 31. Drive shaft 31 includes pin member 31a which forwardly extends from and is integral with a front end of drive shaft 31. The axis of pin member 31a is radially offset from the axis of drive shaft 31, and pin member 31a is operatively connected to circular end plate 22a of orbiting scroll 2

This Sheet Has Been Replaced



THIS SHEET HAS BEEN REPLACED

Rotation preventing mechanism 24 is disposed between inner block 23 and circular end plate 22a of orbiting scroll 22 so that orbiting scroll 22 only orbits during rotation of drive shaft 31.

Inner block 23 includes a central hole 23a of which the longitudinal axis is concentric with the longitudinal axis of cylindrical portion 111. Bearing 25 is fixedly disposed within central hole 23a so as to rotatably support a front end portion of drive shaft 31. Second cup-shaped portion 113 includes annular cylindrical projection 113a forwardly projecting from a central region of an inner surface of a bottom end section thereof. The longitudinal axis of annular cylindrical projection 113a is concentric with the longitudinal axis of second cup-shaped portion 113. Bearing 26 is fixedly disposed within annular cylindrical projection 113a so as to rotatably support a rear end portion of drive shaft 31. Second cup-shaped portion 113 further includes cylindrical projection 113b rearwardly projecting from a central region of an outer surface of the bottom end section thereof.

Axial hole 113c functioning as an inlet port of the compressor is centrally formed through cylindrical projection 113b so as to be connected to an outlet of another element, such as a evaporator (not shown) of the external cooling circuit through pipe member (not shown). The longitudinal axis of axial hole 113c is concentric with the longitudinal axis of annular cylindrical projection 113a. A diameter of axial hole 113c is slightly smaller than an inner diameter of annular cylindrical projection 113a.

Drive shaft 31 includes first axial bore 31b axially extend

This Sheet Has Been Replaced

ing therethrough. One end of first axial bore 31b is opened at a rear end surface of drive shaft 31 so as to be adjacent to a front opening end of axial hole 113c. The other end of first axial bore 31b terminates at a location which is rear to bearing 25. A plurality of radial bores 31c is formed at the front terminal end of first axial bore 31b so as to link the front terminal end of first axial bore 31b to first cavity 33. Second axial bore 31d axially extends from the front terminal end of first axial bore 31b and is opened at a front end surface of pin member 31a of drive shaft 31. A diameter of second axial bore 31d is smaller than a diameter of first axial bore 31b, and the longitudinal axis of second axial bore 31d is radially offset from the longitudinal axis of first axial bore 31b.

Annular cylindrical projection 113d rearwardly projects from one peripheral region of the outer surface of the bottom end section of second cup-shaped portion 113. One portion of annular cylindrical projection 113d is integral with one portion of cylindrical projection 113b. Hermetic seal base 27 is firmly secured to a rear end of annular cylindrical projection 113d by a plurality of bolts (not shown). O-ring seal element 43 is elastically disposed at a rear end surface of annular cylindrical projection 113d so as to seal the mating surfaces of hermetic seal base 27 and annular cylindrical projection 113d. Wires 27a extend from the rear end of stator 32a of motor 32, and pass through hermetic seal base 27 for connection to an external electric power source (not shown).

Motor 32 includes annular-shaped rotor 32a fixedly surrounding an exterior surface of drive shaft 31 and annular shaped

This Sheet Has Been Replaced



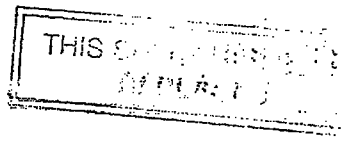

stator 32b surrounding rotor 32a with a radial air gap. Stator 32b axially extends along the rear opening end region of cylindrical portion 111 and the opening end region of second cup-shaped portion 113 between a first annular ridge 111a formed at an inner peripheral surface of cylindrical portion 111 and a second annular ridge 113e formed at an inner peripheral surface of second cup-shaped portion 113. The axial length of stator 32b is slightly smaller than an axial distance between first annular ridge 111a and second annular ridge 113e. In an assembling process of the compressor, stator 32b is forcibly inserted into either the rear opening end region of cylindrical portion 111 until an outer peripheral portion of a front end surface of stator 32b is in contact with a side wall of first annular ridge 111a, or the opening end region of second cup-shaped portion 113 until an outer peripheral portion of a rear end surface of stator 32b is in contact with a side wall of second annular ridge 113e.

In operation, a refrigerant gas is introduced into first cavity 33 from axial hole 113c through axial bore 31b and radial bores 31c of the drive shaft 31, and is introduced into second cavity 34 through gas passage 35 and taken into outer sealed fluid pockets between fixed scroll 21 and orbiting scroll 22, and move towards a central pocket, it undergoes a resultant volume reduction and compression and is discharged to outlet port 112 through discharge chamber 50 and discharge port 21c.

Referring to Figure 3, gas passage 35 includes a pluralit of, for example, eight circular holes 35a formed through inne block 23 with surrounding bearing 25 with equiangular interval.

Referring to Figure 4, gas passage 35' includes a pluralit

This Sheet Has Been Replaced



THIS SHEET WAS REPLACED

of, for example, four oval holes 35'a formed through inner block 23 with surrounding bearing 25 with equiangular interval.

The effect of this embodiment is following, the gas channel space formed between compression mechanism 20 and motor 32 to introduce a refrigerant gas from axial hole 113c is not necessary to dispose in casing by the structure of this invention since gas passage 23b which links between first cavity 33 and second cavity 34 is formed in central hole 23a.

Furthermore, in generally, to reduce number of parts and the weight of body are require for a compressor. Such compressor have comparatively many number of parts and is not suitable for lightweighting of body.

Referring to United States Patent No.4,936,756, the portion fixing bearing 26 like a inner block is not necessary for this invention since second cup-shaped portion 113 includes cylindrical projection 113a forwardly projecting from central region of an inner surface of bottom end section thereof, that is, cylindrical projection 113a is used both the bearing fixing portion and the casing of compressor without inner block.

* C L M S *

CLAIMS

1. In a motor driven fluid compressor:

said compressor comprising a compressing mechanism for compressing a gaseous fluid;

a driving mechanism for driving said compressing mechanism, said driving mechanism including a drive shaft operatively connected to said compressing mechanism;

a housing containing said compressing mechanism and said driving mechanism;

said housing including an inner block rotatably supporting an inner end portion of said drive shaft, said inner block dividing an inner hollow space of said housing into a first inner hollow space in which said driving mechanism is disposed and a second inner hollow space in which said compressing mechanism is disposed, the improvement comprising:

at least one hole formed through said inner block so as to link said first inner hollow space to said second inner hollow space.

2. In a motor driven fluid compressor:

said compressor comprising a compressing mechanism for compressing a gaseous fluid;

a driving mechanism for driving said compressing mechanism, said driving mechanism including a drive shaft operatively connected to said compressing mechanism;

a housing containing said compressing mechanism and said driving mechanism, the improvement comprising:

supporting means for rotatably supporting one end of said drive shaft being provided at one axial end of said housing.

This Sheet Has Been Replaced

* C L M S *

THIS SHEET IS BEING REPLACED

3. The motor driven fluid compressor of claim 2, said housing including conducting means for conducting the gaseous fluid into an inner hollow space thereof from one element of an external cooling circuit;

said conducting means includes an outlet port formed at said one axial end of said housing;

an axial bore axially extending through said drive shaft;

one end of said axial bore terminating at one end of said drive shaft so as to be adjacent one end of said outlet port.

This Sheet Has Been Replaced

THIS
REPLACED

ABSTRACT OF THE DISCLOSURE

A motor driven fluid compressor having a compression mechanism, such as a scroll type fluid compression mechanism and a drive mechanism which are contained within a hermetically sealed housing is disclosed. The compression mechanism includes a fixed and orbiting scrolls. The drive mechanism includes a drive shaft and a motor rotating the drive shaft. The drive shaft includes axial bore and radial bore and is rotatably supported by cylindrical portion of housing. The longitudinal axis of axial bore is concentric with the longitudinal of axial hole which is formed in cylindrical portion. Inner block is formed in cylindrical portion have at least one gas passage to introduce a refrigerant gas into compression mechanism from motor drive mechanism through inlet port. As a result, the radial size of compressor housing is easily reduced by forming above gas passage. Furthermore, both the number of compressor parts and the weight of compressor are easily reduced.

This Sheet Has Been Replaced

Fig 1
(Prior Art)

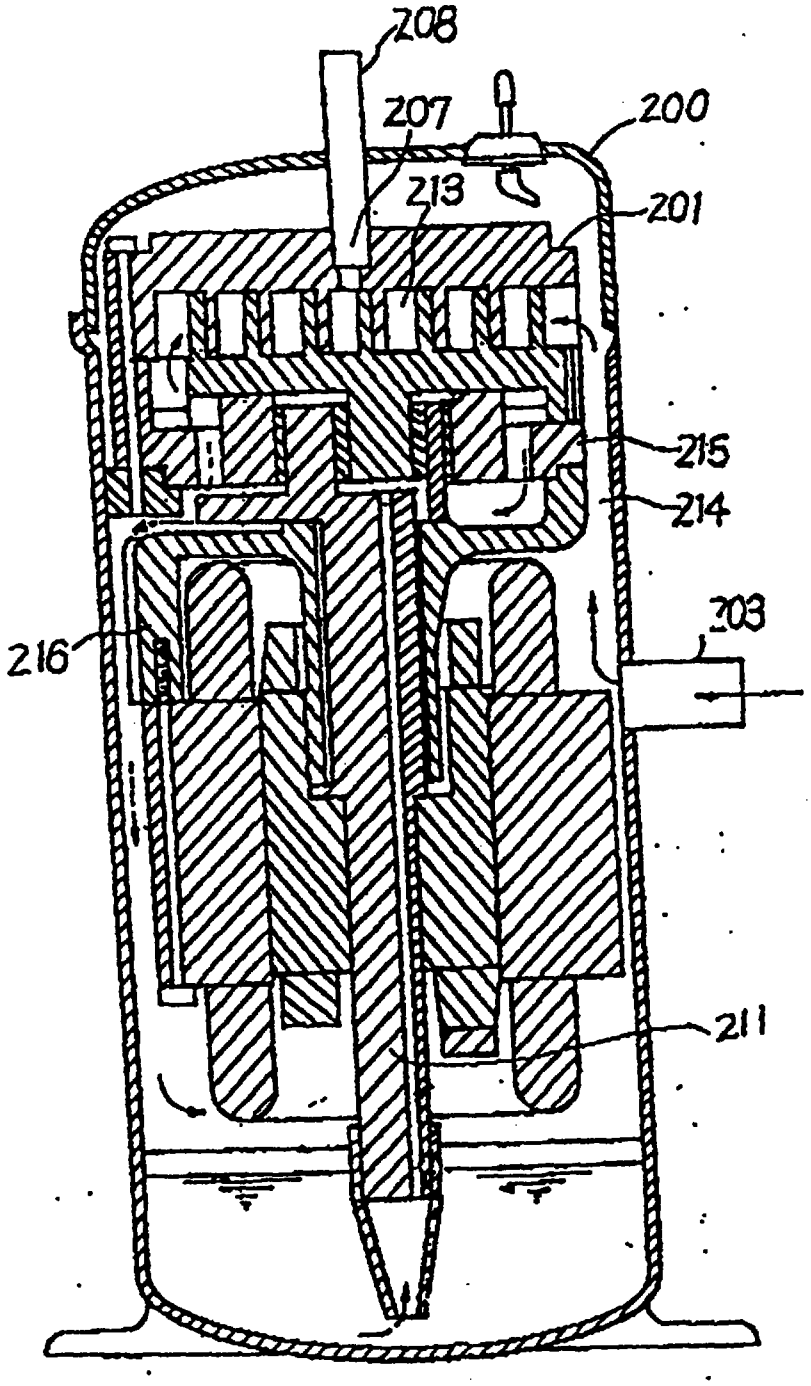

This Sheet Has Been Replaced

This Sheet Has Been Replaced

Fig. 2

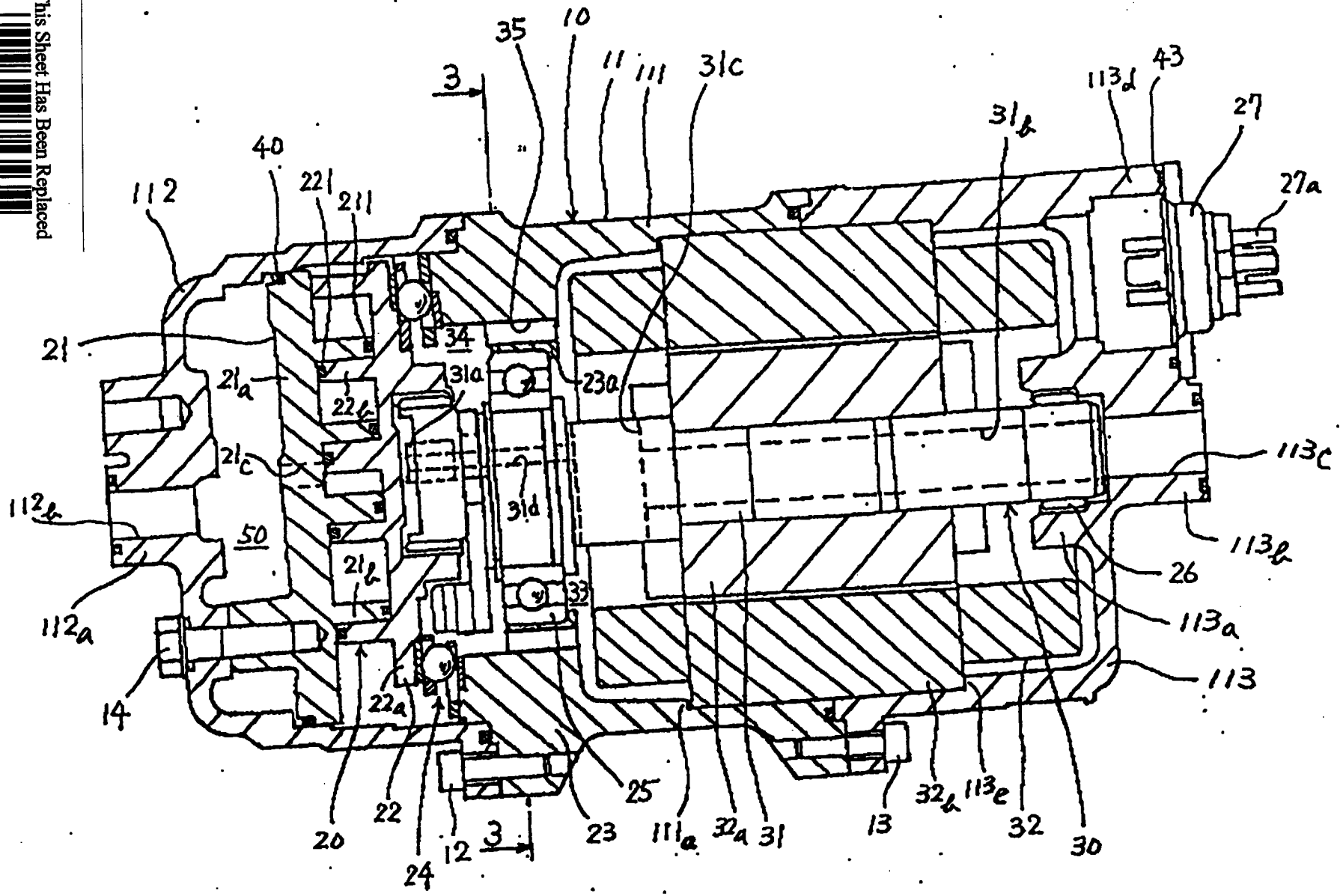

Fig.3

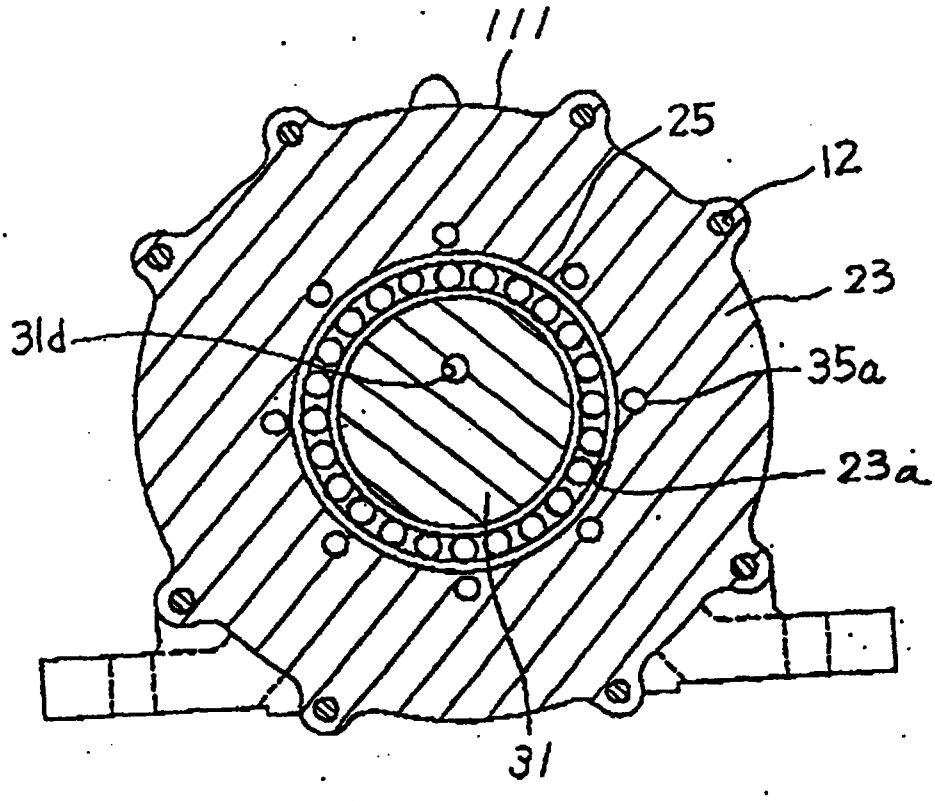

This Sheet Has Been Replaced

THIS SHEET HAS BEEN REPLACED

Fig.4

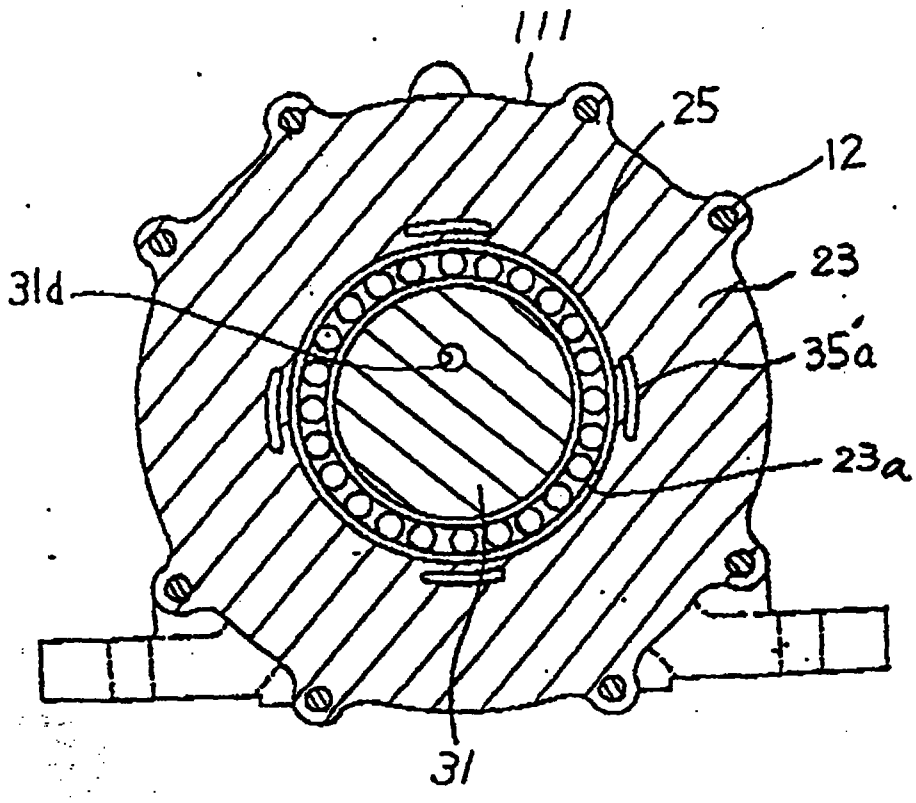

This Sheet Has Been Replaced

RECEIVED
Date 23 OCT 1996

MOTOR DRIVEN FLUID COMPRESSOR

This invention relates to a fluid compressor, and more particularly to a motor driven fluid compressor having the compression and drive mechanisms within a hermetically sealed container.

Motor driven fluid compressors having the compression and drive mechanisms within a hermetically sealed housing are known in the art. For example, Japanese Patent Application Publication No.2-215982 discloses a motor driven fluid compressor which is shown in Figure 1. The compression mechanism includes a fixed scroll 201 having first circular end plate and first spiral element downwardly extending from a lower end surface of the first circular end plate. An outer peripheral wall downwardly extending from a peripheral portion of one end surface of the first circular end plate is connected to a first inner block 215. The compression mechanism further includes an orbiting scroll 202 which is disposed in a hollow space defined by the fixed scroll 201 and the first inner block 215. The orbiting scroll 202 includes a second circular end plate and a second spiral element upwardly extending from an upper end surface of the orbiting scroll. The first and second spiral elements interfit with a radial any angular offset.

The drive mechanism includes a drive shaft 211 and a motor

This Sheet Has Been Replaced



THIS PAGE BLANK
REPLACED
Date : 23 OCT 1996

driving the drive shaft. The drive shaft includes a pin member which upwardly extends from and is integral with a top end of the drive shaft 211. The pin member is operatively connected the orbiting scroll 202. A rotation preventing mechanism is disposed between the orbiting scroll 202 and the first inner block 215 so that the orbiting scroll 202 only orbits during rotation of the drive shaft 211. A lower and surface of the second circular end plate of the orbiting scroll radially slides on an upper end surface of the first inner block 215 during orbital motion of the orbiting scroll 202. A second inner block 216 located below the first inner block 215 includes a central bore through which the drive shaft 211 passes. An upper end portion of drive shaft 211 is rotatably supported by the second inner block by a bearing which is disposed within a central bore. Inlet pipe 203 is hermetically connected to a side wall of the housing at a portion which is below the second inner block, so as to conduct the refrigerant gas from one external element of a cooling circuit, such as an evaporator(not shown) to an inner hollow space of the housing.

A valved discharge port 207 is axially formed through a central portion of the first circular plate of the fixed scroll. An outlet pipe 208 hermetically penetrates through a top end of the housing and is connected to the valved discharge port 207 at its inner end so as to conduct the discharged refrigerant gas to another external element of the cooling circuit, such as a condenser (not shown). An axial channel is formed between one peripheral ends of the first end second inner blocks 215 and 216, and the inner side surface of the housing.

This Sheet Has Been Replaced

THIS SHEET HAS BEEN REPLACED
REPLACED
Date : 23 OCT 1998

However, to reduce the radial size of compressor is difficult while a displacement of compressing is maintained the constant, that is, without reducing the out side diameter of scroll member because such a compressor should have any gas channel space of radial direction between compression space 213 and casing 200.

Furthermore, in generally, to reduce number of parts and the weight of body are require for a compressor. Such compressor have comparatively many number of parts and is not suitable for lightweighting of body.

It is an object of the present invention to easily reduce a radial size of motor driven fluid compressor having the compression and drive mechanisms within a hermetically sealed container.

It is another object of the present invention to assemble a motor driven fluid compressor having the compression and drive mechanisms within a hermetically sealed container under a fewer parts using and more lightweighting.

A compressor according to this invention includes a drive shaft supported at both ends by bearing and having an axial bore linked to at least one radial bore leading to the first cavity The bearing portion forcibly inserted in the drive shaft as part of cylindrical portion is formed between a compression mechanism part and a motor part and have at least one gas passage which links two above parts

One end of drive shaft includes the open end of the axial

This Sheet Has Been Replaced

23 OCT 1996

bore and linked to the inlet port formed in casing.

The other side of the drive shaft extends into the bush and is projected with projection pin.

A fixed scroll and orbiting scroll are disposed within a hermetically sealed housing. The fixed scroll includes an end plate from which a first wrap or spiral element extends into interior of the housing. The end plate of fixed scroll divides the housing into a discharge chamber and a suction chamber.

The first spiral element is located into second cavity. An orbiting scroll includes an end plate from which a second wrap or spiral element extends. The first and second spiral element interfit at an angular and radial offset to form a plurality of line contacts which define at least one pair of sealed off fluid pockets.

The drive mechanism operatively connected to the orbiting scroll to effect orbital motion thereof. A rotation prevention device prevents the rotation of the orbital scroll during orbital motion so that volume of fluid pockets charges to compress the fluid in the pockets inwardly from the outermost pocket towards the central pocket. The compressed gas flows out of the central pocket through a channel in the end plate of the fixed scroll and into a discharge chamber.

In operation, a refrigerant gas is introduced into first cavity from a inlet port through a axial bore and a radial bore of the drive shaft.

The refrigerant gas introduced into second cavity through gas passage is taken into outer sealed fluid pockets between fixed scroll and orbiting scroll, and move towards the central

This Sheet Has Been Replaced

THIS SHEET HAS BEEN REPLACED
REPLACEMENT SHEET
Date : 23 OCT 1996

pocket, it undergoes a resultant volume reduction and compression and is discharged to the discharge chamber through the discharge port.

Further objects, features and other aspects of this invention will be understand from detailed description of the preferred embodiments this invention with reference to annexed drawings.

In the accompanying drawings:

Figure 1 is a longitudinal sectional view of a hermetically sealed scroll type compressor in accordance with one prior art.

Figure 2 is a longitudinal sectional view of the motor driven fluid compressor in accordance with a first embodiment of the present invention.

Figure 3 is a sectional view taken substantially along line 3-3 of Figure 2.

Figure 4 is a view similar to Figure 3, illustrating a second embodiment of the present invention.

In Figure 2, for purposes of explanation only, the left side of the figure will be referenced as the forward end or front of the compressor, and the right side of the figure will be referenced as the rearward end or rear of the compressor.

With reference to Figure 2, an overall construction of motor driven fluid compressor, such as a motor driven scroll typ fluid compressor 10 in accordance with a first embodiment of the present invention is shown. Compressor 10 includes compressd

This Sheet Has Been Replaced

THIS SHEET WAS REPLACED

Date: 23 OCT 1996

housing 11 which contains a compression mechanism, such as scroll type fluid compression mechanism 20 and drive mechanism 30 therein. Compressor housing 11 includes cylindrical portion 111, and first and second cup-shaped portions 112 and 113. An opening end of first cup-shaped portion 112 is releasably and hermetically connected to a front opening end of cylindrical portion 111 by a plurality of bolts 12. An opening end of second cup-shaped portion 113 is releasably and hermetically connected to a rear opening end of cylindrical portion 111 by a plurality of bolts 13.

Scroll type fluid compression mechanism 20 includes fixed scroll 21 having circular end plate 21a and spiral element 21b which rearwardly extends from circular end plate 21a. Circular end plate 21a of fixed scroll 21 is fixedly disposed within first cup-shaped portion 112 by a plurality of bolts 14. Inner block 23 extends radially inwardly and is integral with the front opening end of cylindrical portion 111 of compressor housing 11 First cavity 33 is the space including motor drive mechanism 30 in the rear of compressor. Second cavity 34 is the space including rotation preventing mechanism 24 and fluid compression mechanism 20 in the front of compressor. Scroll type fluid compression mechanism 20 further includes orbiting scroll 22 having circular end plate 22a and spiral element 22b which forwardly extends from circular end plate 22a. Spiral element 21b of fixed scroll 21 interfits with spiral element 22b of orbiting scroll 22 with an angular and radial offset.

Seal element 211 is disposed at an end surface of spiral element 21b of fixed scroll 21 so as to seal the mating surfaces of spiral element 21b of fixed scroll 21 and circular end plate

This Sheet Has Been Replaced



THIS SHEET
REPLACEMENT
Date : 23 OCT 1996

22a of orbiting scroll 22. Similarly, seal element 221 is disposed at an end surface of spiral element 22b of orbiting scroll 22 so as to seal the mating surfaces of spiral element 22b of orbiting scroll 22 and circular end plate 21a of fixed scroll 21. O-ring seal element 40 is elastically disposed between an outer peripheral surface of circular end plate 21a of fixed scroll 21 and an inner peripheral surface of first cup-shaped portion 112 to seal the mating surfaces of circular end plate 21a of fixed scroll 21 and first cup-shaped portion 112. Circular end plate 21a of fixed scroll 21 and first cup-shaped portion 112 define discharge chamber 50.

Circular end plate 21a of fixed scroll 21 is provided with valved discharge port 21c axially formed therethrough so as to link discharge chamber 50 to a central fluid pocket (not shown which is defined by fixed and orbiting scrolls 21 and 22. First cup-shaped portion 112 includes cylindrical projection 112a forwardly projecting from an outer surface of a bottom end section thereof. Axial hole 112b functioning as an outlet port of the compressor is centrally formed through cylindrical projection 112a so as to be connected to an inlet of one element, such as condenser (not shown) of an external cooling circuit through pipe member (not shown).

Drive mechanism 30 includes drive shaft 31 and motor 3 surrounding drive shaft 31. Drive shaft 31 includes pin member 31a which forwardly extends from and is integral with a front en of drive shaft 31. The axis of pin member 31a is radially offse from the axis of drive shaft 31, and pin member 31a is operatively connected to circular end plate 22a of orbiting scroll 22

This Sheet Has Been Replaced

THIS SHEET HAS BEEN REPLACED

REPLACEMENT SHEET
Date 23 OCT 1996

Rotation preventing mechanism 24 is disposed between inner block 23 and circular end plate 22a of orbiting scroll 22 so that orbiting scroll 22 only orbits during rotation of drive shaft 31.

Inner block 23 includes a central hole 23a of which the longitudinal axis is concentric with the longitudinal axis of cylindrical portion 111. Bearing 25 is fixedly disposed within central hole 23a so as to rotatably support a front end portion of drive shaft 31. Second cup-shaped portion 113 includes annular cylindrical projection 113a forwardly projecting from a central region of an inner surface of a bottom end section thereof. The longitudinal axis of annular cylindrical projection 113a is concentric with the longitudinal axis of second cup-shaped portion 113. Bearing 26 is fixedly disposed within annular cylindrical projection 113a so as to rotatably support a rear end portion of drive shaft 31. Second cup-shaped portion 113 further includes cylindrical projection 113b rearwardly projecting from a central region of an outer surface of the bottom end section thereof.

Axial hole 113c functioning as an inlet port of the compressor is centrally formed through cylindrical projection 113b so as to be connected to an outlet of another element, such as a evaporator (not shown) of the external cooling circuit through pipe member (not shown). The longitudinal axis of axial hol 113c is concentric with the longitudinal axis of annular cylindrical projection 113a. A diameter of axial hole 113c is slightly smaller than an inner diameter of annular cylindrical projection 113a.

Drive shaft 31 includes first axial bore 31b axially extend

This Sheet Has Been Replaced

REPLACEMENT SHEET
Date : 23 OCT 1996

ing therethrough. One end of first axial bore 31b is opened at a rear end surface of drive shaft 31 so as to be adjacent to a front opening end of axial hole 113c. The other end of first axial bore 31b terminates at a location which is rear to bearing 25. A plurality of radial bores 31c is formed at the front terminal end of first axial bore 31b so as to link the front terminal end of first axial bore 31b to first cavity 33. Second axial bore 31d axially extends from the front terminal end of first axial bore 31b and is opened at a front end surface of pin member 31a of drive shaft 31. A diameter of second axial bore 31d is smaller than a diameter of first axial bore 31b, and the longitudinal axis of second axial bore 31d is radially offset from the longitudinal axis of first axial bore 31b.

Annular cylindrical projection 113d rearwardly projects from one peripheral region of the outer surface of the bottom end section of second cup-shaped portion 113. One portion of annular cylindrical projection 113d is integral with one portion of cylindrical projection 113b. Hermetic seal base 27 is firmly secured to a rear end of annular cylindrical projection 113d by a plurality of bolts (not shown). O-ring seal element 43 is elastically disposed at a rear end surface of annular cylindrical projection 113d so as to seal the mating surfaces of hermetic seal base 27 and annular cylindrical projection 113d. Wires 27a extend from the rear end of stator 32a of motor 32, and pass through hermetic seal base 27 for connection to an external electric power source (not shown).

Motor 32 includes annular-shaped rotor 32a fixedly surrounding an exterior surface of drive shaft 31 and annular shaped

This Sheet Has Been Replaced

THIS SHEET WAS REPLACED

REPLACEMENT SHEET
Date 23 OCT 1996

stator 32b surrounding rotor 32a with a radial air gap. Stator 32b axially extends along the rear opening end region of cylindrical portion 111 and the opening end region of second cup-shaped portion 113 between a first annular ridge 111a formed at an inner peripheral surface of cylindrical portion 111 and a second annular ridge 113e formed at an inner peripheral surface of second cup-shaped portion 113. The axial length of stator 32b is slightly smaller than an axial distance between first annular ridge 111a and second annular ridge 113e. In an assembling process of the compressor, stator 32b is forcibly inserted into either the rear opening end region of cylindrical portion 111 until an outer peripheral portion of a front end surface of stator 32b is in contact with a side wall of first annular ridge 111a, or the opening end region of second cup-shaped portion 113 until an outer peripheral portion of a rear end surface of stator 32b is in contact with a side wall of second annular ridge 113e.

In operation, a refrigerant gas is introduced into first cavity 33 from axial hole 113c through axial bore 31b and radial bores 31c of the drive shaft 31, and is introduced into second cavity 34 through gas passage 35 and taken into outer sealed fluid pockets between fixed scroll 21 and orbiting scroll 22,and move towards a central pocket, it undergoes a resultant volume reduction and compression and is discharged to outlet port 112l through discharge chamber 50 and discharge port 21c.

Referring to Figure 3, gas passage 35 includes a pluralit of, for example, eight circular holes 35a formed through inne block 23 with surrounding bearing 25 with equiangular interval.

Referring to Figure 4, gas passage 35' includes a pluralit

This Sheet Has Been Replaced

REPLACEMENT SHEET
Date : 23 OCT 1996

of, for example, four oval holes 35'a formed through inner block 23 with surrounding bearing 25 with equiangular interval.

The effect of this embodiment is following, the gas channel space formed between compression mechanism 20 and motor 32 to introduce a refrigerant gas from axial hole 113c is not necessary to dispose in casing by the structure of this invention since gas passage 23b which links between first cavity 33 and second cavity 34 is formed in central hole 23a.

Furthermore, in generally, to reduce number of parts and the weight of body are require for a compressor. Such compressor have comparatively many number of parts and is not suitable for lightweighting of body.

Referring to United States Patent No.4,936,756, the portion fixing bearing 26 like a inner block is not necessary for this invention since second cup-shaped portion 113 includes cylindrical projection 113a forwardly projecting from central region of an inner surface of bottom end section thereof, that is, cylindrical projection 113a is used both the bearing fixing portion and the casing of compressor without inner block.

This Sheet Has Been Replaced

THIS SHEET HAS BEEN REPLACED
23 OCT 1996

CLAIMS

1. In a motor driven fluid compressor:

said compressor comprising a compressing mechanism for compressing a gaseous fluid;

a driving mechanism for driving said compressing mechanism, said driving mechanism including a drive shaft operatively connected to said compressing mechanism;

a housing containing said compressing mechanism and said driving mechanism;

said housing including an inner block rotatably supporting an inner end portion of said drive shaft, said inner block dividing an inner hollow space of said housing into a first inner hollow space in which said driving mechanism is disposed and a second inner hollow space in which said compressing mechanism is disposed, the improvement comprising:

at least one hole formed through said inner block so as to link said first inner hollow space to said second inner hollow space.

2. In a motor driven fluid compressor:

said compressor comprising a compressing mechanism for compressing a gaseous fluid;

a driving mechanism for driving said compressing mechanism, said driving mechanism including a drive shaft operatively connected to said compressing mechanism;

a housing containing said compressing mechanism and said driving mechanism, the improvement comprising:

supporting means for rotatably supporting one end of said drive shaft being provided at one axial end of said housing.

This Sheet Has Been Replaced

THIS SHEET HAS BEEN REPLACED
REPLACEMENT SHEET
Date :....23 OCT 1996

3. The motor driven fluid compressor of claim 2, said housing including conducting means for conducting the gaseous fluid into an inner hollow space thereof from one element of an external cooling circuit;

said conducting means includes an outlet port formed at said one axial end of said housing;

an axial bore axially extending through said drive shaft;

one end of said axial bore terminating at one end of said drive shaft so as to be adjacent one end of said outlet port.

This Sheet Has Been Replaced

THIS SHEET HAS BEEN REPLACED

REPLACEMENT SHEET
Date : 23 OCT 1996

MOTOR DRIVEN FLUID COMPRESSOR

ABSTRACT OF THE DISCLOSURE

A motor driven fluid compressor having a compression mechanism, such as a scroll type fluid compression mechanism and a drive mechanism which are contained within a hermetically sealed housing is disclosed. The compression mechanism includes a fixed and orbiting scrolls. The drive mechanism includes a drive shaft and a motor rotating the drive shaft. The drive shaft includes axial bore and radial bore and is rotatably supported by cylindrical portion of housing. The longitudinal axis of axial bore is concentric with the longitudinal of axial hole which is formed in cylindrical portion. Inner block is formed in cylindrical portion have at least one gas passage to introduce a refrigerant gas into compression mechanism from motor drive mechanism through inlet port. As a result, the radial size of compressor housing is easily reduced by forming above gas passage. Furthermore, both the number of compressor parts and the weight of compressor are easily reduced.

FIGURE 2.

This Sheet Has Been Replaced

23 OCT 1998

Fig 1
Prior Art

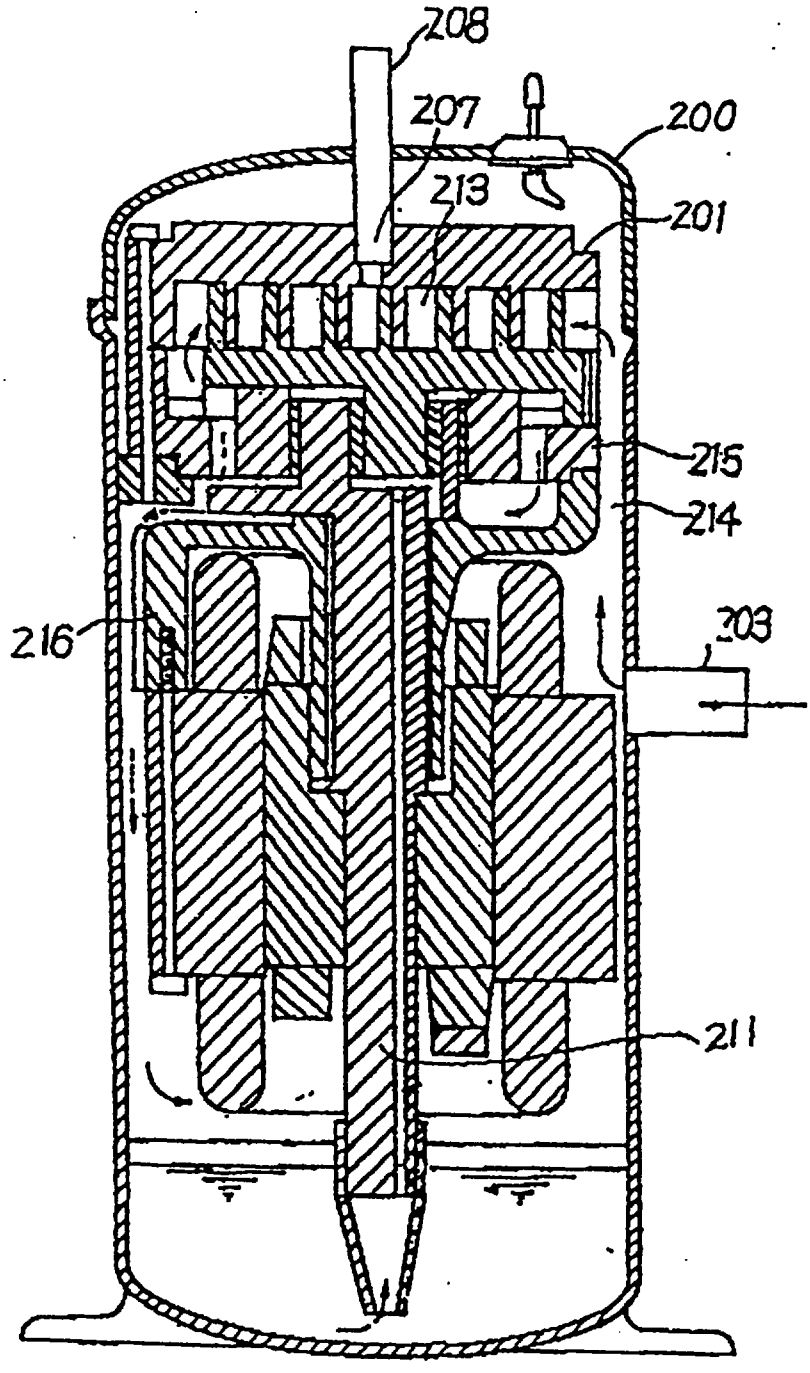

This Sheet Has Been Replaced

This Sheet Has Been Replaced

Fig. 2

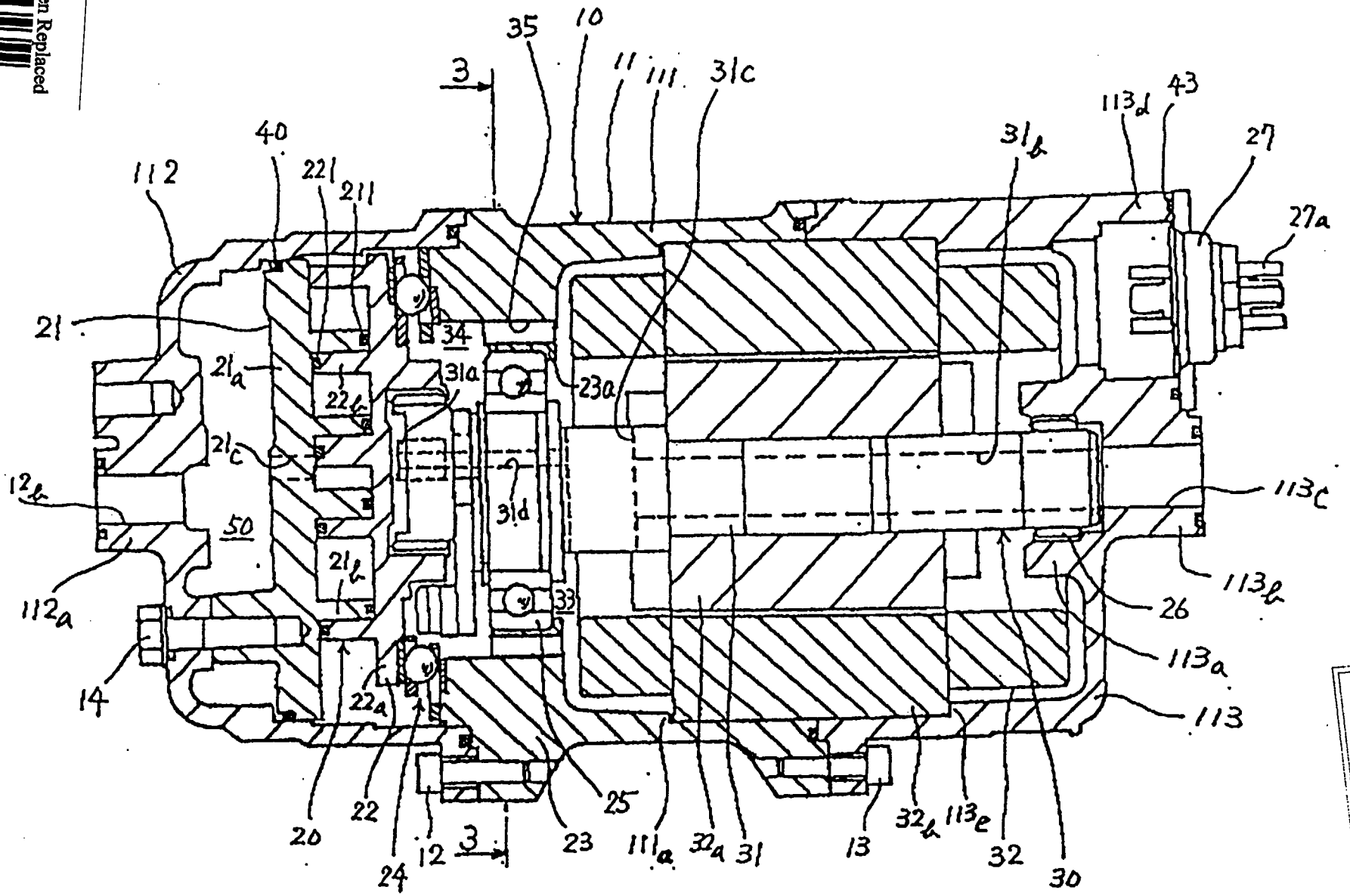

2.

REPLACEMENT SHEET
Date ....23 OCT 1996

REPLACEMENT SHEET
Date : 23 OCT 1996

Fig.3

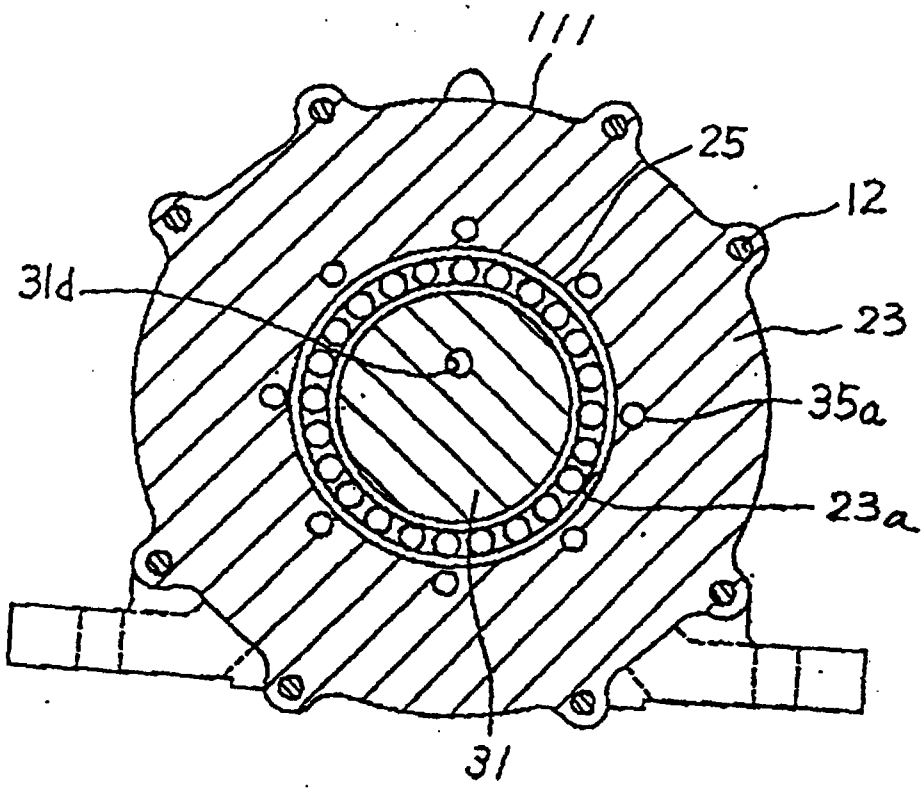

This Sheet Has Been Replaced

THIS SHEET HAS BEEN REPLACED

REPLACEMENT SHEET

Date : 23 OCT 1996

Fig. 4

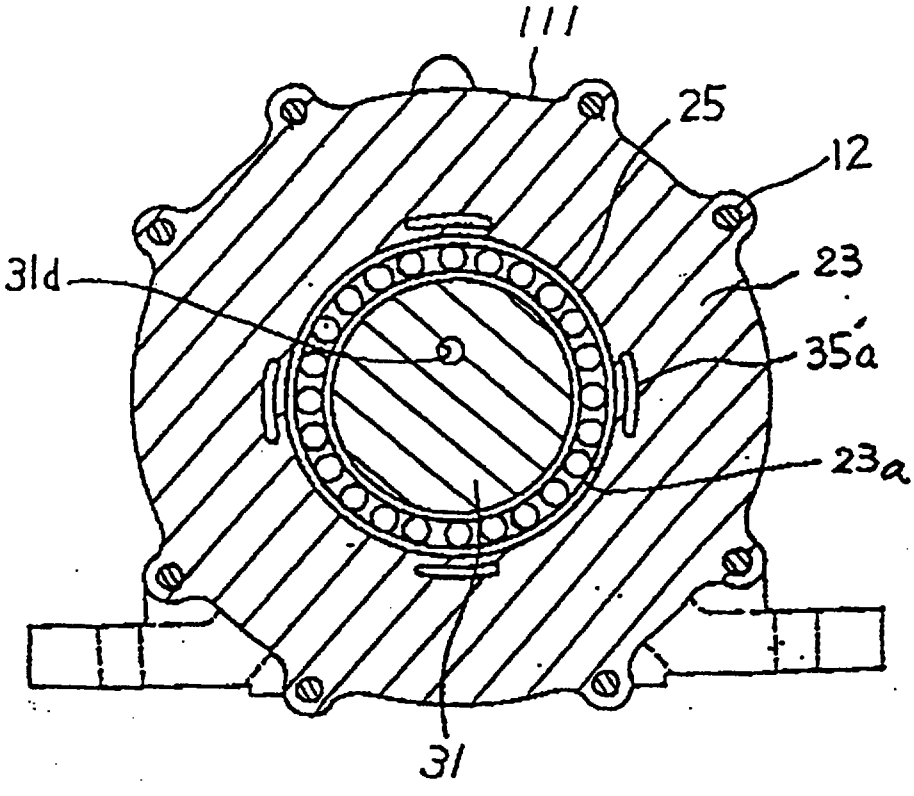

This Sheet Has Been Replaced

REPLACEMENT
Date : 22 JUL 1997

Description

This invention relates to a fluid compressor, and more particularly to a motor driven fluid compressor having the compression and drive mechanisms within a hermetically sealed container.

Motor driven fluid compressors having the compression and drive mechanisms within a hermetically sealed housing are known in the art. For example, JP-A-02-215 982 discloses a motor driven fluid compressor which is shown in Figure 1. The compression mechanism includes a fixed scroll 201 having a first circular end plate and a first spiral element extending downwards from a lower end surface of the first circular end plate. An outer peripheral wall extends downwards from a peripheral portion of one end surface of the first circular end plate and is connected to a first inner block 215. The compression mechanism further includes an orbiting scroll 202 which is disposed in a hollow space defined by the fixed scroll 201 and the first inner block 215. The orbiting scroll 202 includes a second circular end plate and a second spiral element extending upwards from an upper end surface of the orbiting scroll. The first and second spiral elements interfit with any radial angular offset.

The drive mechanism includes a drive shaft 211 and a motor which drives the drive shaft. The drive shaft includes a pin member which extends upwardly from, and is integral with a top end of the drive shaft 211. The pin member is operatively connected to the orbiting scroll 202. A rotation preventing mechanism is disposed between the orbiting scroll 202 and the first inner block 215 so that the orbiting scroll 202 only orbits during rotation

REPLACEMENT
Date : 22 JUL 1997

of the drive shaft 211. A lower end surface of the second circular end plate of the orbiting scroll radially slides on an upper end surface of the first inner block 215 during orbital motion of the orbiting scroll 202. A second inner block 216 located below the first inner block 215 includes a central bore through which the drive shaft 211 passes. An upper end portion of drive shaft 211 is rotatably supported by the second inner block by a bearing which is disposed within a central bore. Inlet pipe 203 is hermetically connected to a side wall of the housing at a portion which is below the second inner block, to conduct the refrigerant gas from one external element of a cooling circuit, such as an evaporator(not shown) to an inner hollow space of the housing.

A valved discharge port 207 is axially formed through a central portion of the first circular plate of the fixed scroll. An outlet pipe 208 hermetically penetrates through a top end of the housing and is connected to the valved discharge port 207 at its inner end to conduct the discharged refrigerant gas to another external element of the cooling circuit, such as a condenser (not shown). An axial channel is formed between one peripheral ends of the first end second inner blocks 215 and 216, and the inner side surface of the housing.

However, the reduction of the radial size of the compressor is difficult whilst maintaining the compressing displacement constant, that is, without reducing the outside diameter of the scroll member because such a compressor requires a gas channel space in a radial direction between compression space 213 and casing 200.

Furthermore, generally, a reduction in the number of parts and the weight of the body would be desirable. However, the compressor of the prior art has a compar-

REPLACEMENT PAGE
Date : 22 JUL 1997

atively large number of parts and it is difficult to make it lighter.

It is an object of the present invention to reduce the radial size of a motor driven fluid compressor, having its compression and drive mechanism within a hermetically sealed container.

It is another object of the present invention to assemble a motor driven fluid compressor having the compression and drive mechanisms within a hermetically sealed container having fewer parts and with a lighter body.

EP-A-0508293 is a non-prepublished document disclosing a scroll type compressor with an injection mechanism.

JP-A-1290983 discloses a motor driven fluid compressor comprising a compressing mechanism for compressing a gaseous fluid; a driving mechanism for driving the compressing mechanism, the driving mechanism including a drive shaft operatively connected to the compressing mechanism; a housing containing the compressing mechanism and the driving mechanism; the housing including an inner block rotatably supporting an inner end portion of the drive shaft, the inner block dividing an inner hollow space of the housing into a first inner hollow space in which the driving mechanism is disposed and a second inner hollow space in which the compressing mechanism is disposed; a plurality of equiangularly spaced axial holes formed through the inner block so as to link the first inner hollow space to the second inner hollow space and according to the present invention such a compressor is characterised by the equiangularly spaced axial holes being elongate in a circumferential direction relative to the axis of the inner block.

Date : 22 JUL 1997

The compressor may also include a supporting means, for rotatably supporting one end of the drive shaft, provided at one axial end of the housing; the housing including conducting means for conducting gaseous fluid into an inner hollow space from an element of an external cooling circuit; the conducting means including an inlet port formed at the one axial end of the housing; an axial bore axially extending through the drive shaft; and an end wall of the housing having an integral annular portion which surrounds and defines the inlet port and which receives and supports the end of the drive shaft.

In operation, a refrigerant gas is introduced into the first inner hollow space from an inlet port through an axial bore of the drive shaft and a radial bore.

The refrigerant gas introduced into the second inner hollow space through the oval equiangularly spaced axial holes is taken into outer sealed fluid pockets between a fixed scroll and an orbiting scroll, and moved towards a central pocket and undergoes a resultant volume reduction and compression and is discharged to the discharge chamber through the discharge port.

In the accompanying drawings:

Figure 1 is a longitudinal sectional view of a hermetically sealed scroll type compressor in accordance with one example of the prior art.

Figure 2 is a longitudinal sectional view of the motor driven fluid compressor in accordance with a first embodiment of the present invention.

Figure 3 is a sectional view taken substantially along line 3-3 of Figure 2.

In Figure 2, for purposes of explanation only, the left side of the figure will be referred to as the front of the

REPLACEMENT
Date :.....22 JUL 1997

compressor, and the right side of the figure will be referred to as the rearward end or rear of the compressor.

With reference to Figure 2, an overall construction of a motor driven fluid compressor, such as a motor driven scroll type fluid compressor 10 in accordance with a first embodiment of the present invention is shown. Compressor 10 includes compressor housing 11 which contains a compression mechanism, such as scroll type fluid compression mechanism 20 and drive mechanism 30 therein. Compressor housing 11 includes cylindrical portion 111, and first and second cup-shaped portions 112 and 113. An opening end of first cup-shaped portion 112 is releasably and hermetically connected to a front opening end of cylindrical portion 111 by a plurality of bolts 12. An opening end of second cup-shaped portion 113 is releasably and hermetically connected to a rear opening end of cylindrical portion 111 by a plurality of bolts 13.

Scroll type fluid compression mechanism 20 includes fixed scroll 21 having circular end plate 21a and spiral element 21b which rearwardly extends from circular end plate 21a. Circular end plate 21a of fixed scroll 21 is fixedly disposed within first cup-shaped portion 112 by a plurality of bolts 14. Inner block 23 extends radially inwardly and is integral with the front opening end of cylindrical portion 111 of compressor housing 11 First cavity 33 is the space including motor drive mechanism 30 in the rear of the compressor. Second cavity 34 is the space including rotation preventing mechanism 24 and fluid compression mechanism 20 in the front of compressor. Scroll type fluid compression mechanism 20 further includes orbiting scroll 22 having circular end plate 22a and spiral element 22b which forwardly ex-

REPLACED
Date :...22 JUL 1997

tends from circular end plate 22a. Spiral element 21b of fixed scroll 21 interfits with spiral element 22b of orbiting scroll 22 with an angular and radial offset.

Seal element 211 is disposed at an end surface of spiral element 21b of fixed scroll 21 so as to seal the mating surfaces of spiral element 21b of fixed scroll 21 and circular end plate 22a of orbiting scroll 22. Similarly, seal element 221 is disposed at an end surface of spiral element 22b of orbiting scroll 22 so as to seal the mating surfaces of spiral element 22b of orbiting scoll 22 and circular end plate 21a of fixed scroll 21. O-ring seal element 40 is elastically disposed between an outer peripheral surface of circular end plate 21a of fixed scroll 21 and an inner peripheral surface of first cup-shaped portion 112 to seal the mating surfaces of circular end plate 21a of fixed scroll 21 and first cup-shaped portion 112. Circular end plate 21a of fixed scroll 21 and first cup-shape portion 112 define discharge chamber 50.

Circular end plate 21a of fixed scroll 21 is provided with valved discharge port 21c axially formed therethrough so as to link discharge chamber 50 to a central fluid pocket (not shown) which is defined by fixed and orbiting scrolls 21 and 22. First cup-shaped portion 112 includes cylindrical projection 112a forwardly projecting from an outer surface of a bottom end section thereof. Axial hole 112b functioning as an outlet port of the compressor is centrally formed through cylindrical projection 112a so as to be connected to an inlet of one element, such as a condenser (not shown) of an external cooling circuit through a pipe member (not shown).

Drive mechanism 30 includes drive shaft 31 and motor 32 surrounding drive shaft 31. Drive shaft 31 includes pin member 31a which forwardly extends from

REPLACED
Date : 22 JUL 1997

and is integral with a front end of drive shaft 31. The axis of pin member 31a is radially offset from the axis of drive shaft 31, and pin member 31a is operatively connected to circular end plate 22a of orbiting scroll 22. Rotation preventing mechanism 24 is disposed between inner block 23 and circular end plate 22a of orbiting scroll 22 so that orbiting scroll 22 only orbits during rotation of drive shaft 31.

Inner block 23 includes a central hole 23a of which the longitudinal axis is concentric with the longitudinal axis of cylindrical portion 111. Bearing 25 is fixedly disposed within central hole 23a so as to rotatably support a front end portion of drive shaft 31. Second cup-shaped portion 113 includes annular cylindrical projection 113a forwardly projecting from a central region of an inner surface of a bottom end section thereof. The longitudinal axis of annular cylindrical projection 113a is concentric with the longitudinal axis of second cup-shaped portion 113. Bearing 26 is fixedly disposed within annular cylindrical projection 113a so as to rotatably support a rear end portion of drive shaft 31. Second cup-shaped portion 113 further includes cylindrical projection 113b rearwardly projecting from a central region of an outer surface of the bottom end section thereof.

Axial hole 113c functioning as an inlet port of the compressor is centrally formed through cylindrical projection 113b so as to be connected to an oulet of another element, such as an evaporator (not shown) of the external cooling circuit through a pipe member (not shown). The longitudinal axis of axial hole 113c is concentric with the longitudinal axis of annular cylindrical projection 113a. A diameter of axial hole 113c is slightly smaller than an inner diameter of annular cylindrical projection 113a.

Date 22 JUL 1997

Drive shaft 31 includes first axial bore 31b axially extending therethrough. One end of first axial bore 31b is opened at a rear end surface of drive shaft 31 so as to be adjacent to a front opening end of axial hole 113c. The other end of first axial bore 31b terminates at a location which is rear to bearing 25. A plurality of radial bores 31c is formed at the front terminal end of first axial bore 31b so as to link the front terminal end of first axial bore 31b to first cavity 33. Second axial bore 31d axially extends from the front terminal end of first axial bore 31b and is opened at a front end surface of pin member 31a of drive shaft 31. A diameter of second axial bore 31d is smaller than a diameter of first axial bore 31b, and the longitudinal axis of second axial bore 31d is radially offset from the longitudinal axis of first axial bore 31b.

Annular cylindrical projection 113d rearwardly projects from one peripheral region of the outer surface of the bottom end section of second cup-shaped portion 113. One portion of annular cylindrical projection 113d is integral with one portion of cylindrical projection 113b. Hermetic seal base 27 is firmly secured to a rear end of annular cylindrical projection 113d by a plurality of bolts (not shown). O-ring seal element 43 is elastically disposed at a rear end surface of annular cylindrical projection 113d so as to seal the mating surfaces of hermetic seal base 27 and annular cylindrical projection 113d. Wires 27a extend from the rear end of stator 32a of motor 32, and pass through hermetic seal base 27 for connection to an external electric power source (not shown).

Motor 32 includes annular-shaped rotor 32a fixedly surrounding an exterior surface of drive shaft 31 and annular shaped stator 32b surrounding rotor 32a with a ra-

REPLACEMENT
Date : 22 JUL 1997

dial air gap. Stator 32b axially extends along the rear opening end region of cylindrical portion 111 and the opening end region of second cup-shaped portion 113 between a first annular ridge 111a formed at an inner peripheral surface of cylindrical portion 111 and a second annular ridge 113e formed at an inner peripheral surface of second cup-shaped portion 113. The axial lenght of stator 32b is slightly smaller than an axial distance between first annular ridge 111a and second annular ridge 113e. In an assembling process of the compressor, stator 32b is forcibly inserted into either the rear opening end region of cylindrical portion 111 until an outer peripheral portion of a front end surface of stator 32b is in contact with a side wall of first annular ridge 111a, or the opening end region of second cup-shaped portion 113 until an outer peripheral portion of a rear end surface of stator 32b is in contact with a side wall of second annular ridge 113e.

In operation, a refrigerant gas is introduced into first cavity 33 from axial hole 113c through axial bore 31b and radial bores 31c of the drive shaft 31, and is introduced into second cavity 34 through gas passage 35 and taken into outer sealed fluid pockets between fixed scroll 21 and orbiting scroll 22,and move towards a central pocket, it undergoes a resultant volume reduction and compression and is discharged to outlet port 112b through discharge chamber 50 and discharge port 21c.

Referring to Figure 3, gas passage 35' includes a plurality of, for example, four oval holes 35'a which are formed through inner block 23 with equiangular interval and with a surrounding bearing 25.

The effect of this embodiment is that a gas channel space formed between compression mechanism 20,

Date : 22 JUL 1997

motor 32 and the inner surface of the housing to introduce a refrigerant gas from axial hole 113c as required by the prior art is not necessary due to the structure of this invention since a gas passage which links between first cavity 33 and second cavity 34 is formed in central hole 23a.

Furthermore the present invention reduces the number of parts and the weight of such a compressor. The compressor of the prior art has comparatively more parts and cannot be made as lightweight as the compressor of the present invention.

The inner block in US-A-4936756, for supporting the bearing 15, is not necessary for this embodiment as second cup-shaped portion 113 includes a cylindrical annular projection 113a projecting forward from a central region of an inner surface of a bottom end section thereof to support the drive shaft, and an axial hole 113c functioning as an inlet port. Consequently, cup shaped portion 113 is used both to fix the bearing portion and to provide an inlet in the casing of the compressor without the need for a separate inner block.

REPLACEMENT SHEET
Date : 22 JUL 1992

* C L M S *

Claims

1. A motor driven fluid compressor comprising a compressing mechanism (20) for compressing a gaseous fluid; a driving mechanism (30) for driving the compressing mechanism (20), the driving mechanism (30) including a drive shaft (31) operatively connected to the compressing mechanism (20); a housing (11) containing the compressing mechanism (20) and the driving mechanism (30); the housing (11) including an inner block (23) rotatably supporting an inner end portion of the drive shaft (31), the inner block (23) dividing an inner hollow space of the housing into a first inner hollow space (33) in which the driving mechanism (30) is disposed and a second inner hollow space (34) in which the compressing mechanism (20) is disposed; a plurality of equiangularly spaced axial holes (35'a) formed through the inner block (23) so as to link the first inner hollow space (33) to the second inner hollow space (34), characterised in that the equiangularly spaced axial holes (35'a) are elongate in a circumferential direction relative to the axis of the inner block (23).

2. A motor driven fluid compressor according to claim 1, further comprising supporting means (26), for rotatably supporting one end of the drive shaft (31), provided at one axial end of the housing (11); the housing (11) including conducting means for conducting gaseous fluid into an inner hollow space (33) from an element of an external cooling circuit;

Date :...22.JUL.1997...

* C L M S *

the conducting means including an inlet port (113c) formed at the one axial end of the housing and an axial bore (31b) axially extending through the drive shaft (31); and an end wall of the housing (11) having an integral annular portion (113a, 113b) which surrounds and defines the inlet port (113c) and which receives and supports the end of the drive shaft (31).

Date 22 JUL 1997

Fig 1
(Prior Art)

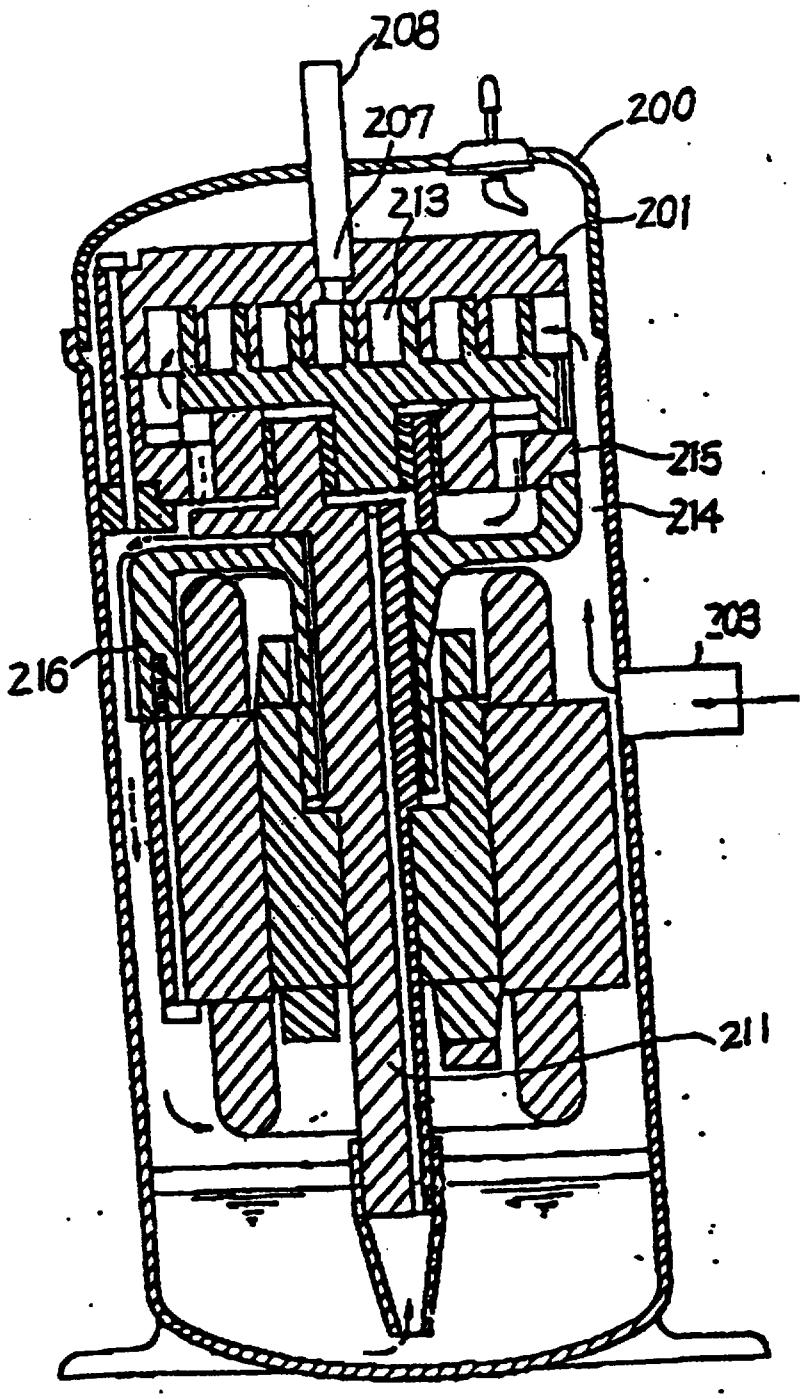

RE...
Date ... 22 JUL 1997

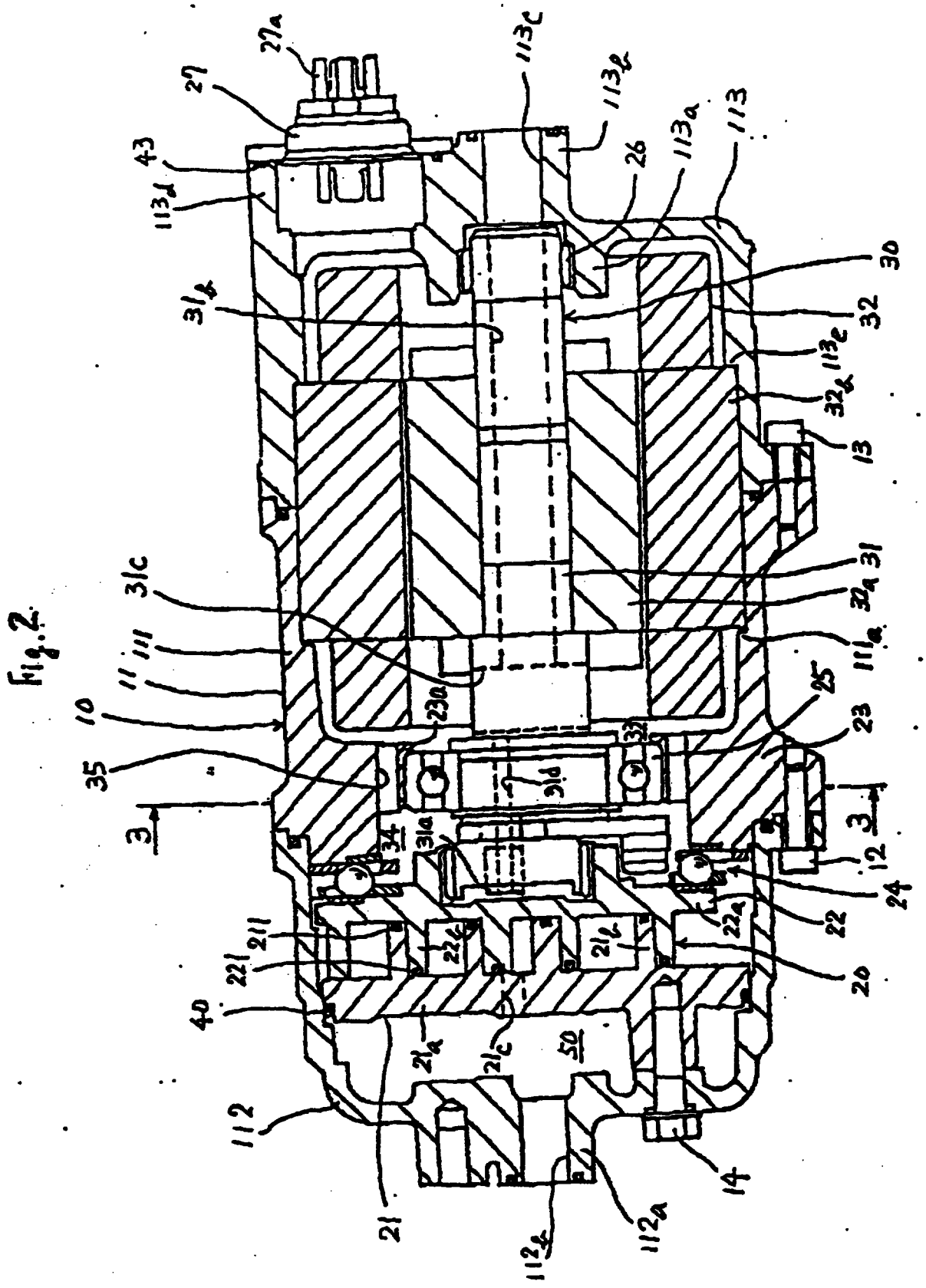

Fig.2.

REPLACEMENT SHEET
Date : 22 JUL 1997

Fig. 3

