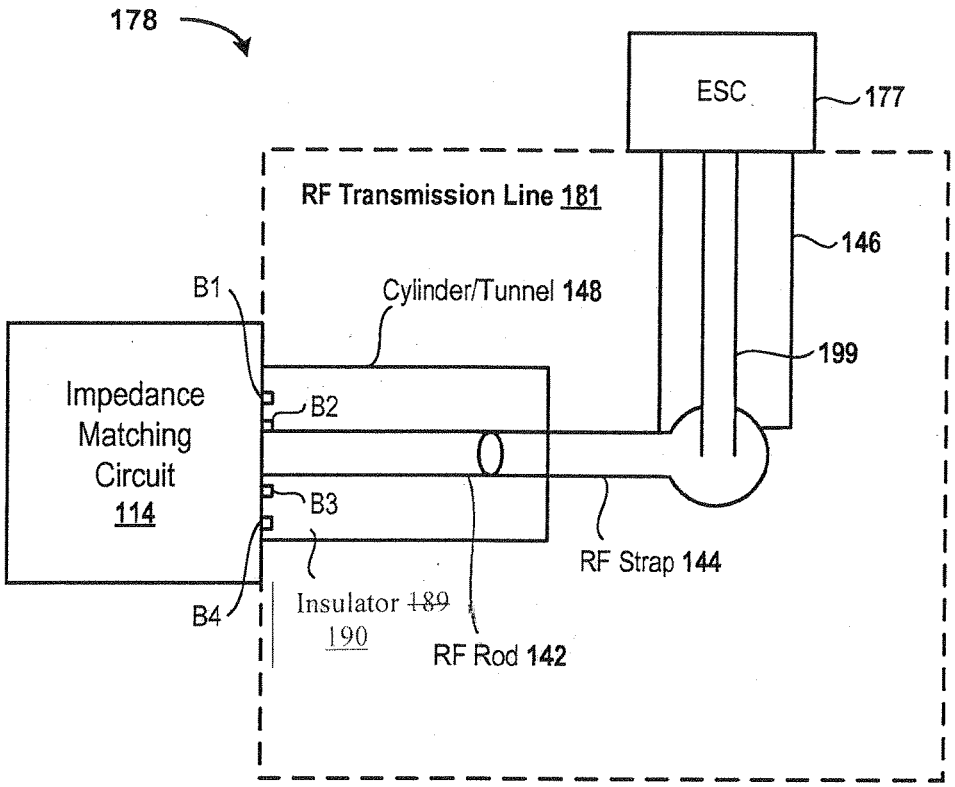
178
ESC
177
RF Transmission Line 181
146
B1
Cylinder/Tunnel 148
199
Impedance
Matching
Circuit
114
B2
B3
RF Strap 144
B4
Insulator 189
190
RF Rod 142

Fig. 4

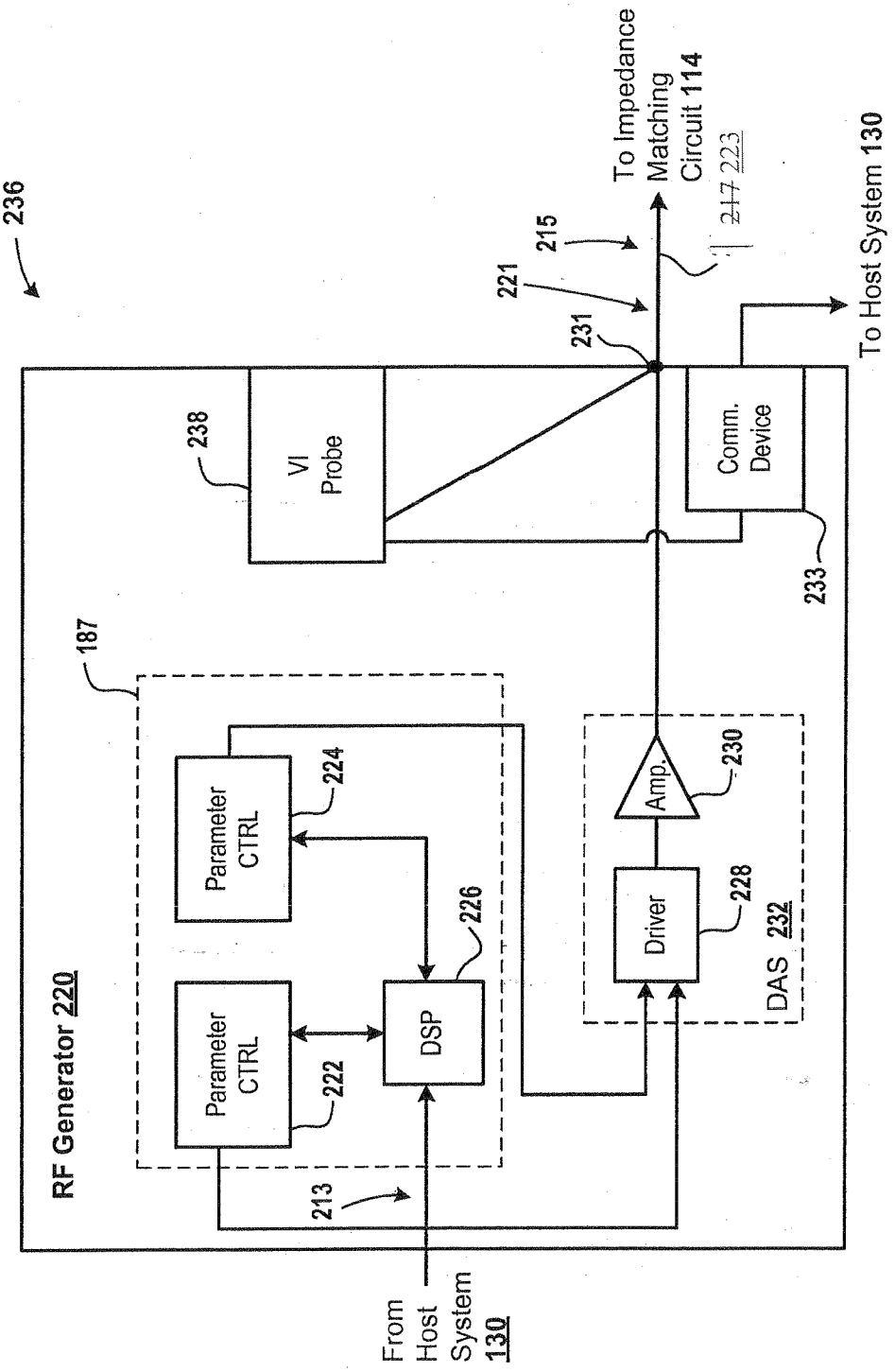
236
To Impedance Matching Circuit 114
217 223
215
221
231
To Host System 130
238
VI Probe
Comm. Device
233
187
RF Generator 220
Parameter CTRL
224
Parameter CTRL
222
DSP
226
Amp.
230
Driver
228
DAS 232
213
From Host System 130

Fig. 9

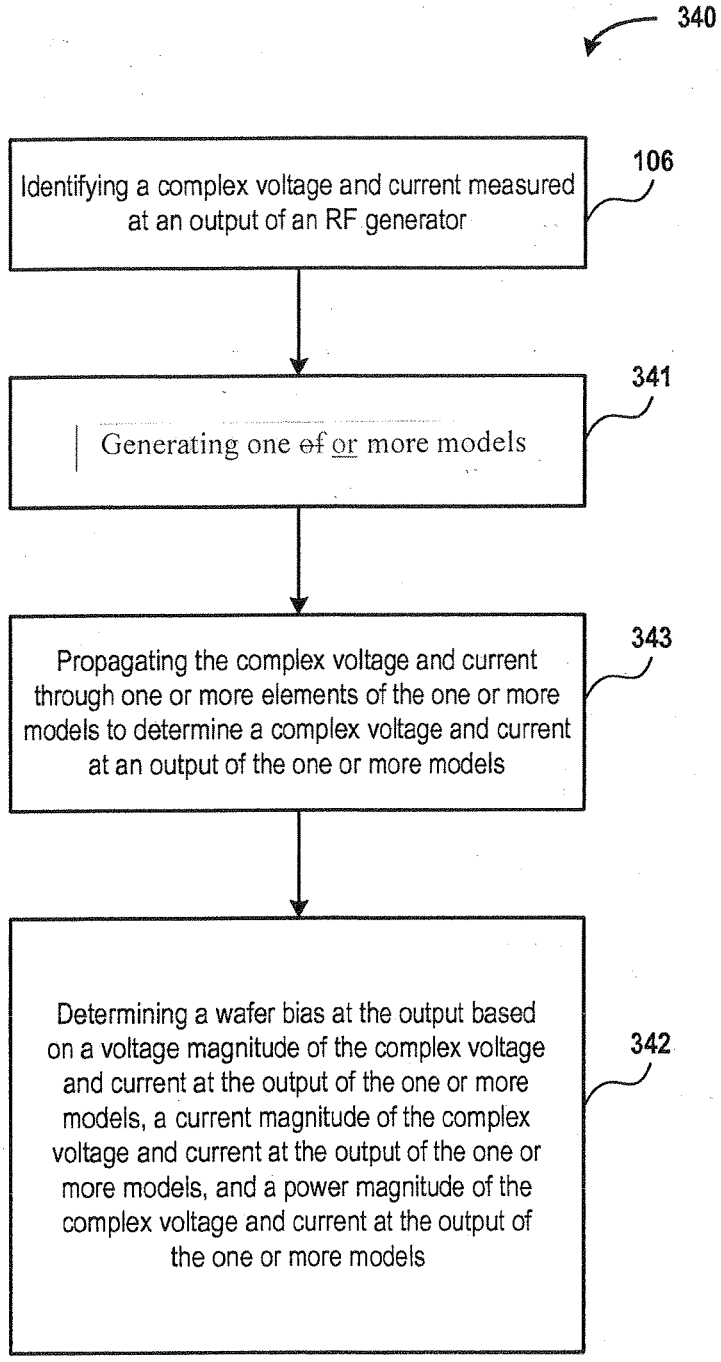
340
Identifying a complex voltage and current measured at an output of an RF generator
106
Generating one ~~of~~ or more models
341
Propagating the complex voltage and current through one or more elements of the one or more models to determine a complex voltage and current at an output of the one or more models
343
Determining a wafer bias at the output based on a voltage magnitude of the complex voltage and current at the output of the one or more models, a current magnitude of the complex voltage and current at the output of the one or more models, and a power magnitude of the complex voltage and current at the output of the one or more models
342

Fig. 13

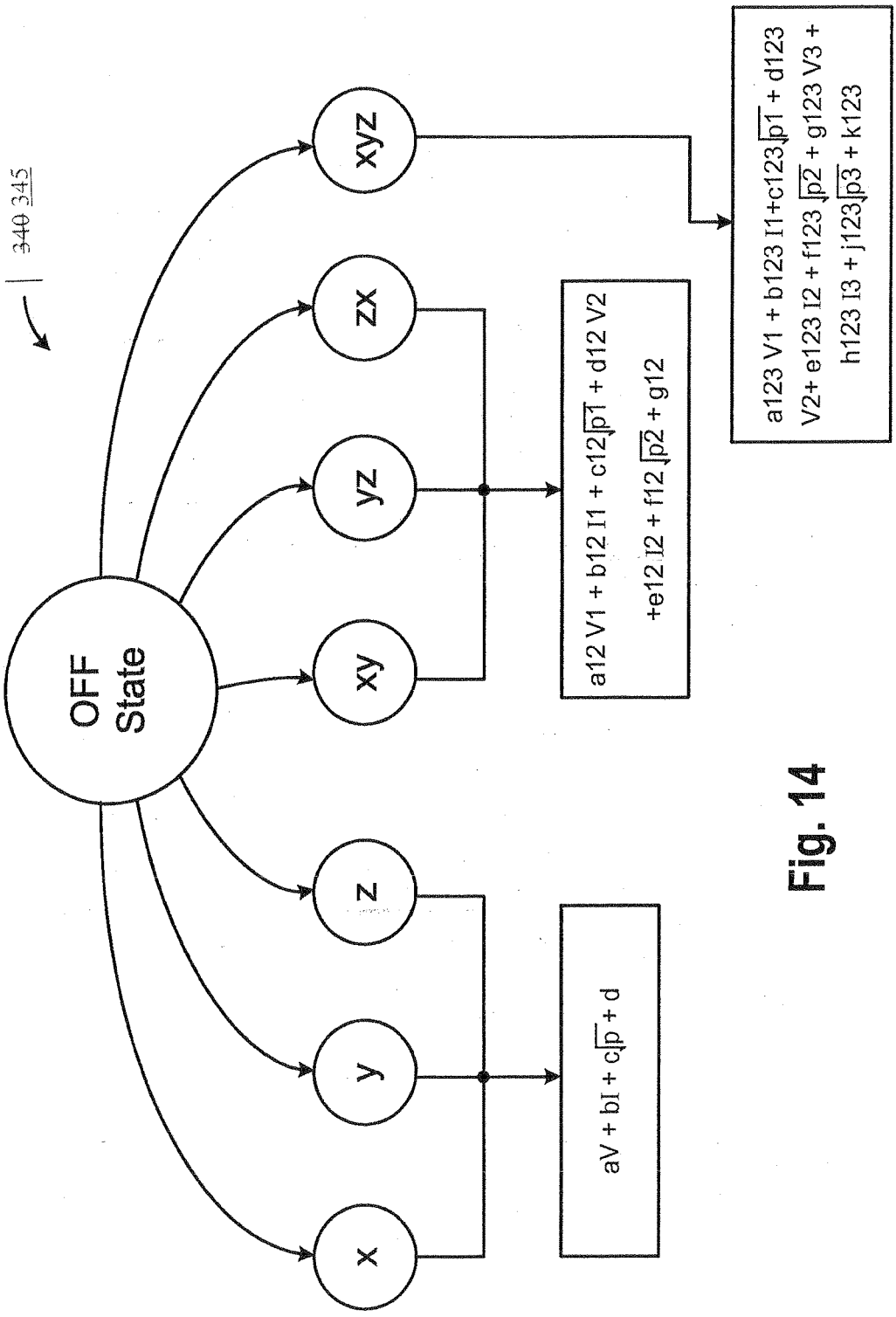
340 345
OFF State
x
y
z
xy
yz
zx
xyz
aV + bI + c√p + d
a12 V1 + b12 I1 + c12√p1 + d12 V2 +e12 I2 + f12 √p2 + g12
a123 V1 + b123 I1+c123√p1 + d123 V2+ e123 I2 + f123 √p2 + g123 V3 + h123 I3 + j123√p3 + k123

Fig. 14

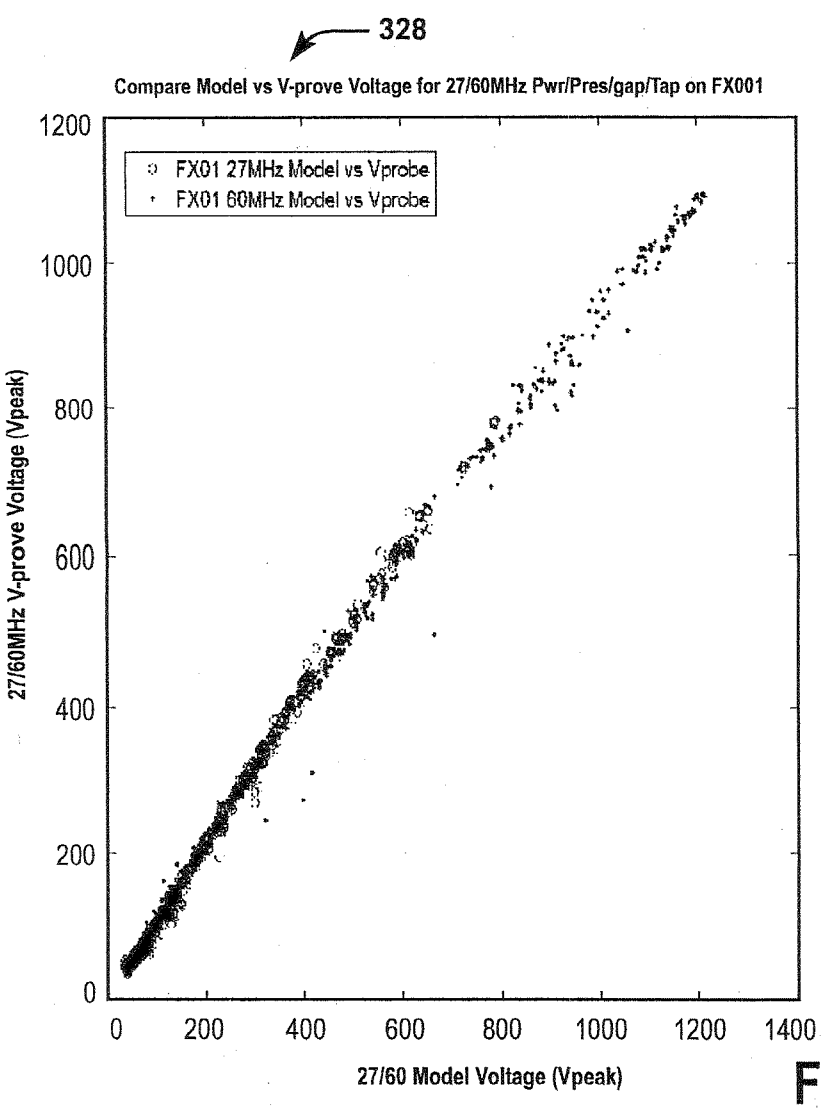
328
Compare Model vs V-prove Voltage for 27/60MHz Pwr/Pres/gap/Tap on FX001
FX01 27MHz Model vs Vprobe
FX01 60MHz Model vs Vprobe
27/60MHz V-prove Voltage (Vpeak)
27/60 Model Voltage (Vpeak)
0
200
400
600
800
1000
1200
1400

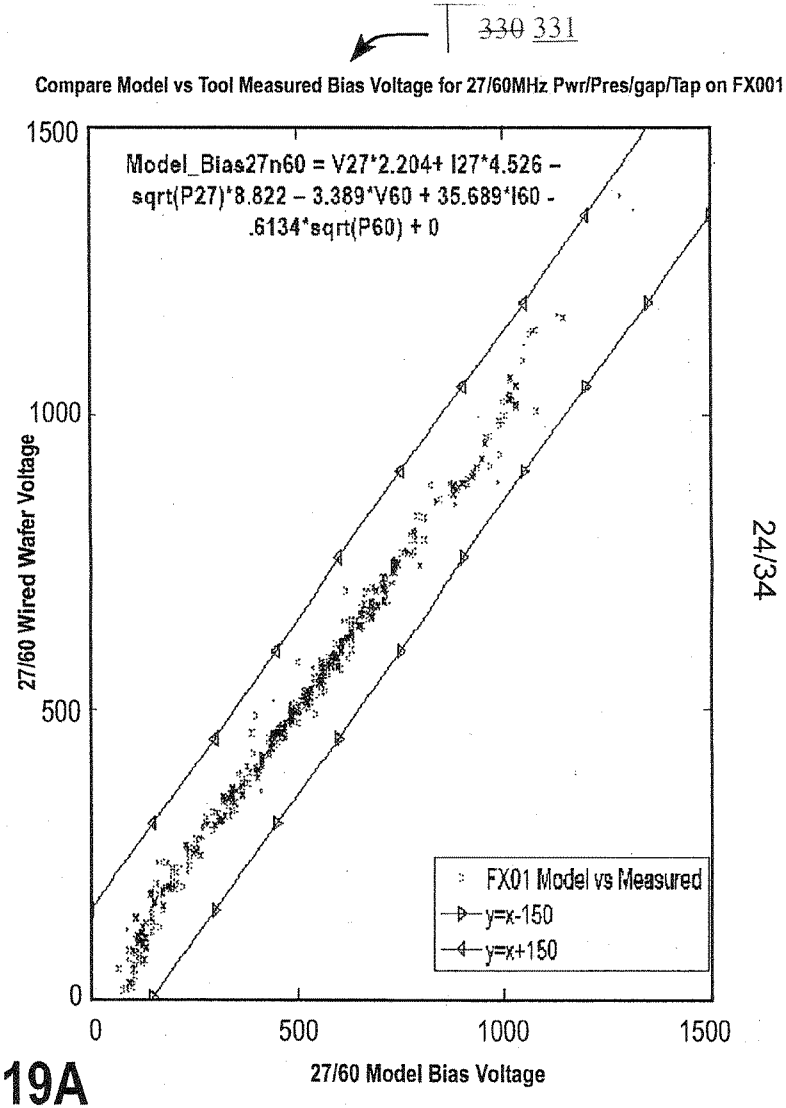
330 331
Compare Model vs Tool Measured Bias Voltage for 27/60MHz Pwr/Pres/gap/Tap on FX001
Model_Bias27n60 = V27*2.204+ I27*4.526 –
sqrt(P27)*8.822 – 3.389*V60 + 35.689*I60 -
.6134*sqrt(P60) + 0
FX01 Model vs Measured
y=x-150
y=x+150
27/60 Wired Wafer Voltage
27/60 Model Bias Voltage
0
500
1000
1500

Fig. 19A

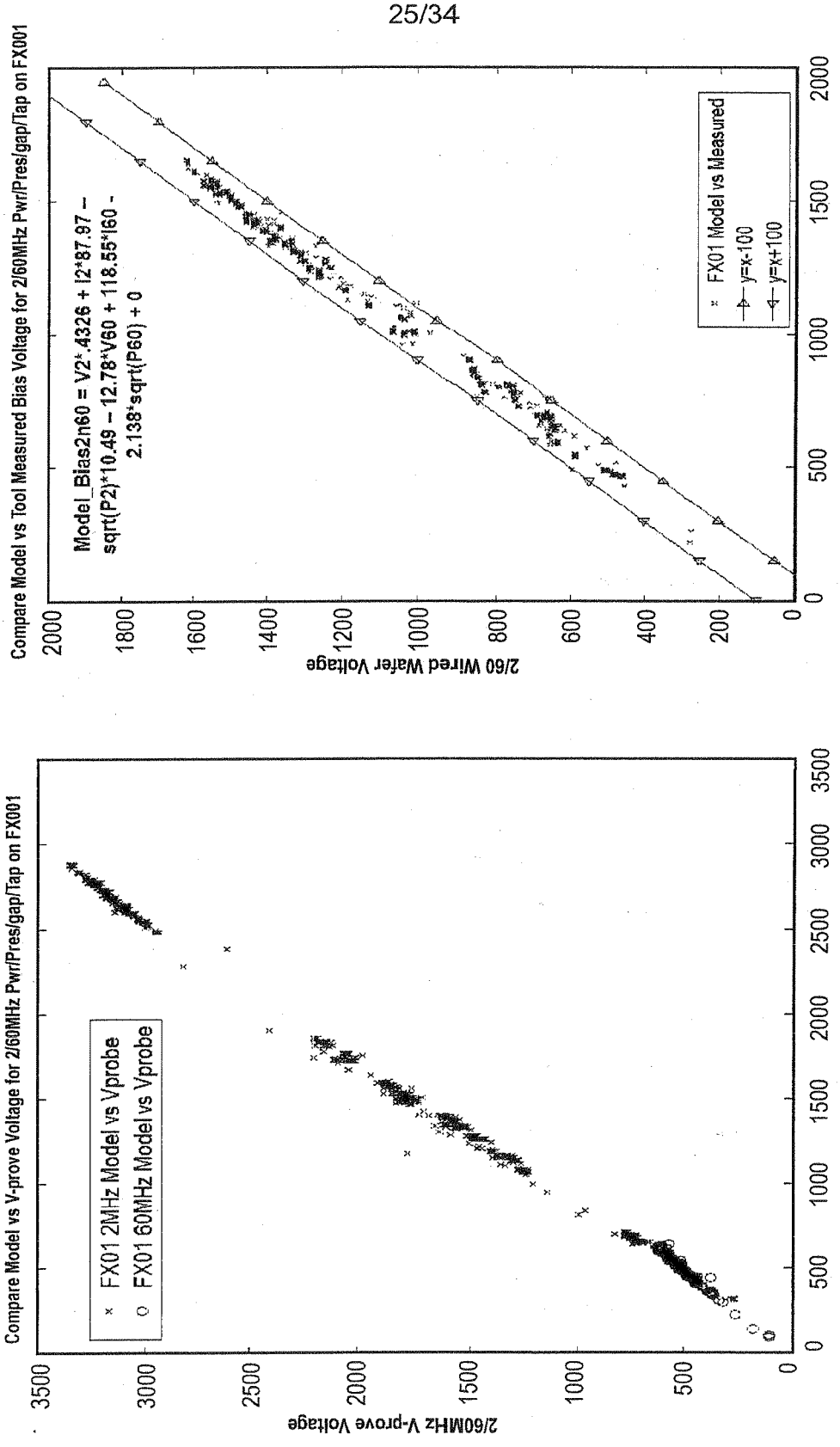
332 333
Compare Model vs V-prove Voltage for 2/60MHz Pwr/Pres/gap/Tap on FX001
FX01 2MHz Model vs Vprobe
FX01 60MHz Model vs Vprobe
2/60MHz V-prove Voltage
2/60 Model Voltage (Vpeak)
334 335
Compare Model vs Tool Measured Bias Voltage for 2/60MHz Pwr/Pres/gap/Tap on FX001
Model_Bias2n60 = V2*.4326 + I2*87.97 – sqrt(P2)*10.49 – 12.78*V60 + 118.55*I60 - 2.138*sqrt(P60) + 0
FX01 Model vs Measured
y=x-100
y=x+100
2/60 Wired Wafer Voltage
2/60 Model Bias Voltage

Fig. 19B

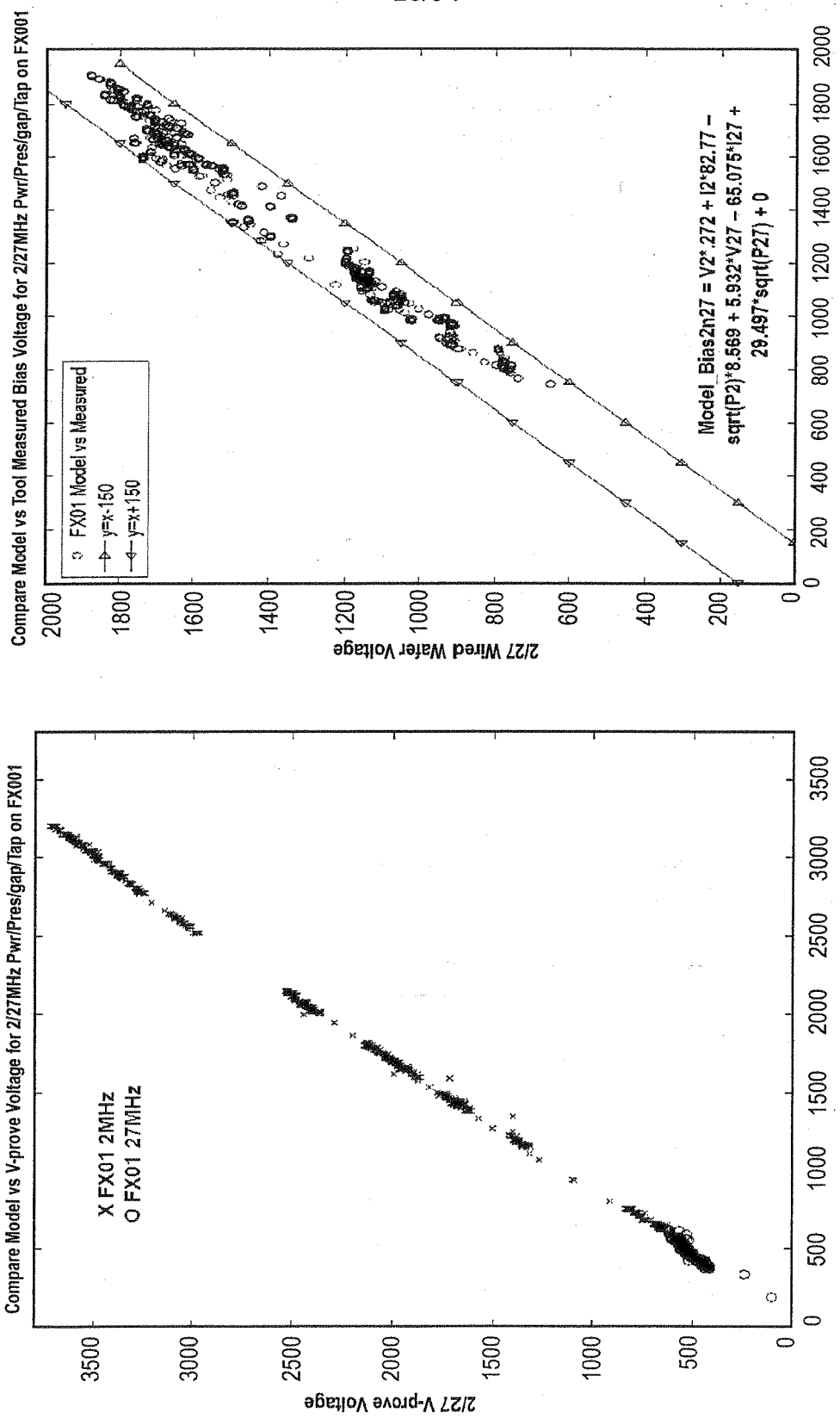
336 337
Compare Model vs V-prove Voltage for 2/27MHz Pwr/Pres/gap/Tap on FX001
X FX01 2MHz
O FX01 27MHz
2/27 V-prove Voltage
2/27 Model Voltage (Vpeak)
338
Compare Model vs Tool Measured Bias Voltage for 2/27MHz Pwr/Pres/gap/Tap on FX001
FX01 Model vs Measured
y=x-150
y=x+150
Model_Bias2n27 = V2*.272 + I2*82.77 – sqrt(P2)*8.569 + 5.932*V27 – 65.075*I27 + 29.497*sqrt(P27) + 0
2/27 Wired Wafer Voltage
2/27 Model Bias Voltage

Fig. 19C

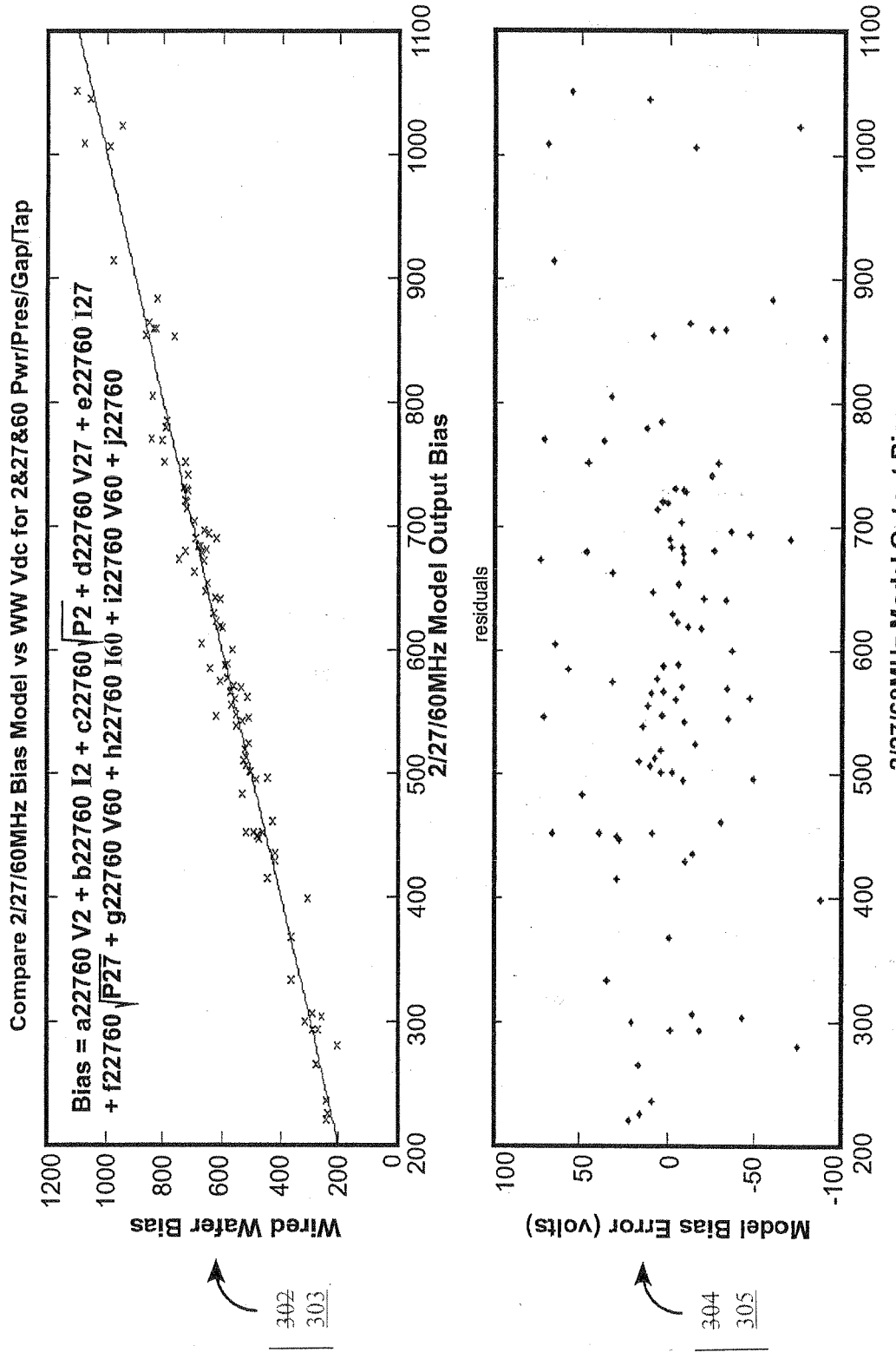
Compare 2/27/60MHz Bias Model vs WW Vdc for 2&27&60 Pwr/Pres/Gap/Tap
Bias = a22760 V2 + b22760 I2 + c22760 √P2 + d22760 V27 + e22760 I27
+ f22760 √P27 + g22760 V60 + h22760 I60 + i22760 V60 + j22760
Wired Wafer Bias
2/27/60MHz Model Output Bias
302
303
residuals
Model Bias Error (volts)
2/27/60MHz Model Output Bias
304
305

Fig. 20G