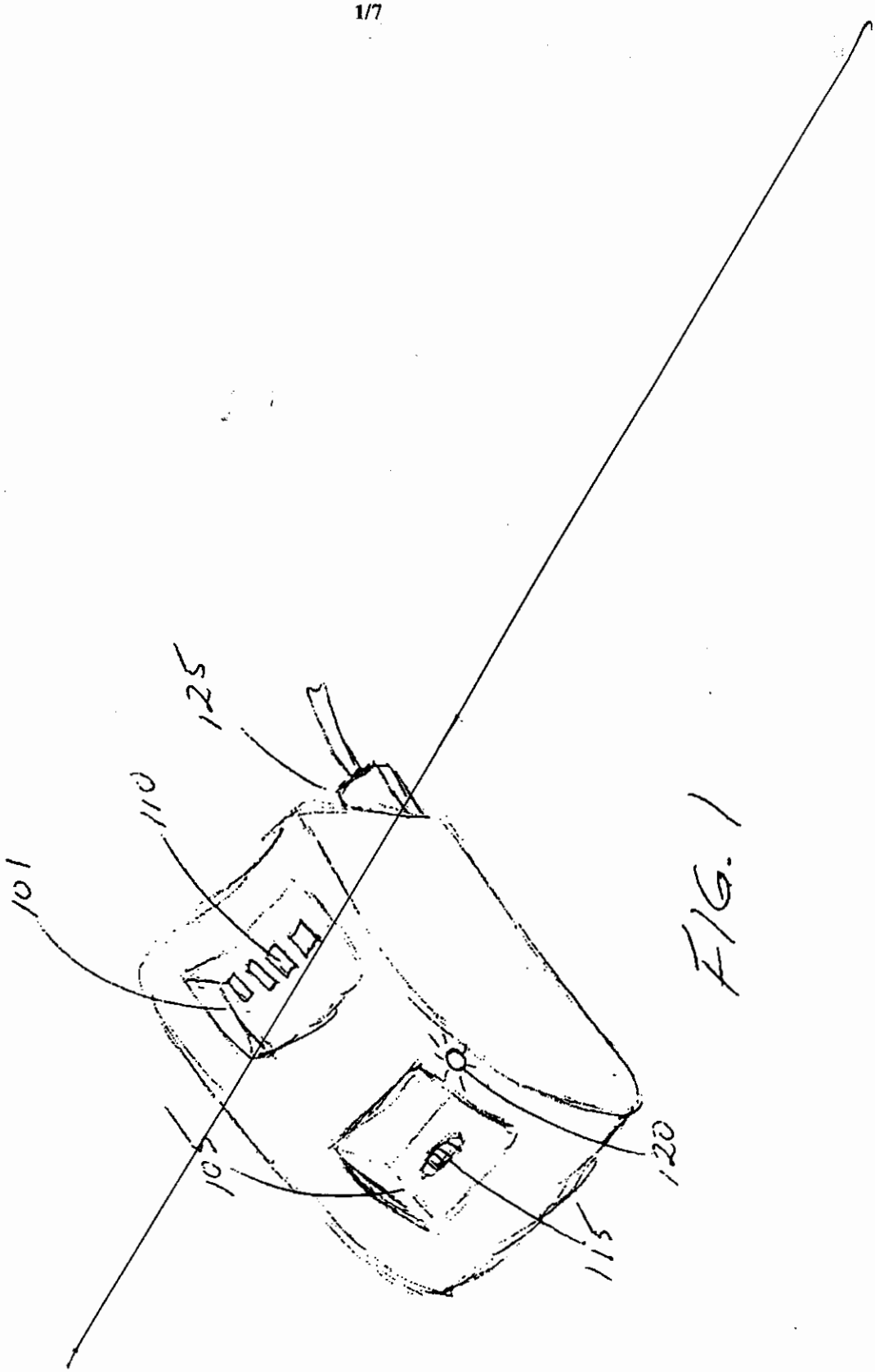

FIG. 1

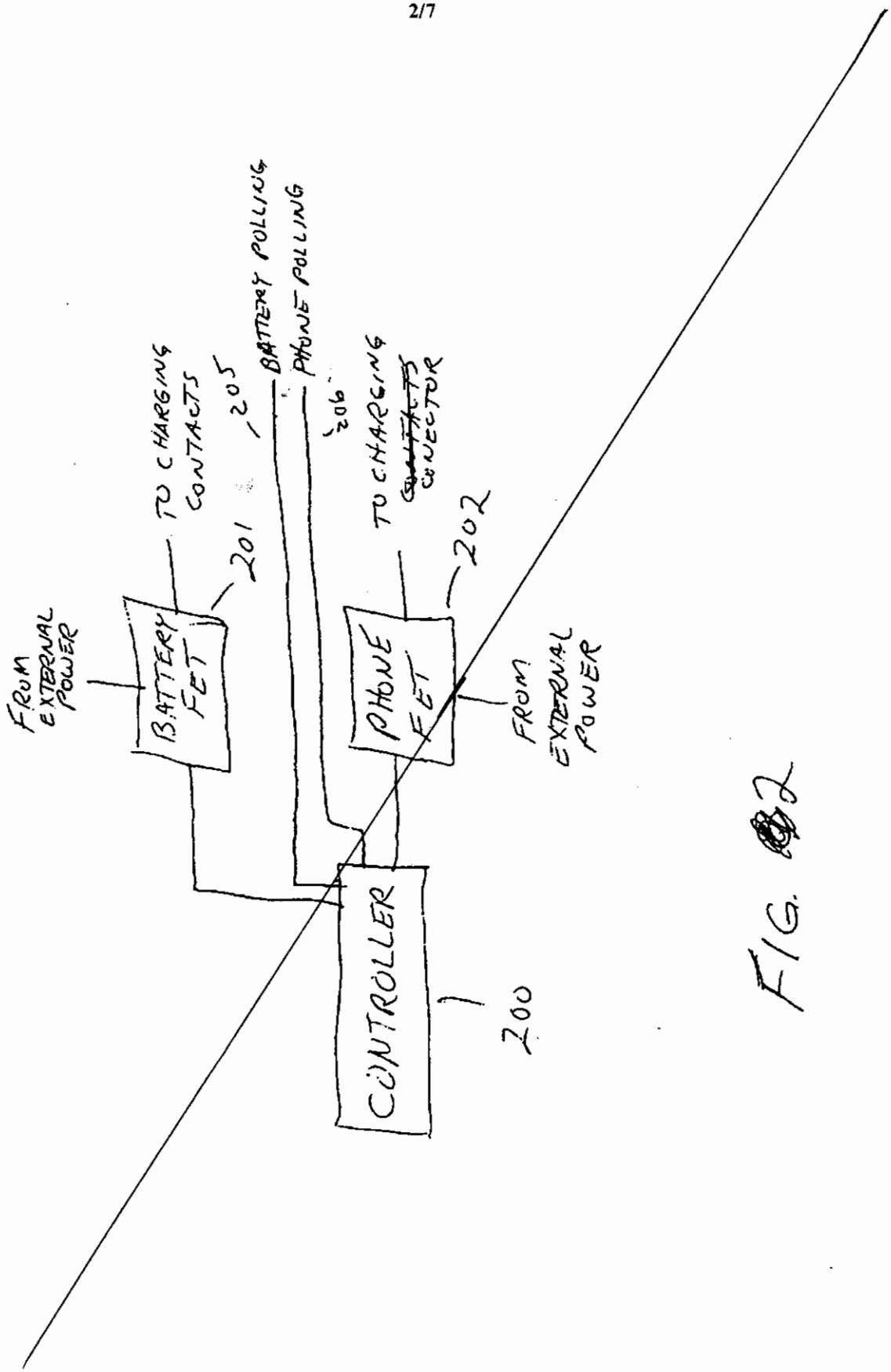
FROM EXTERNAL POWER
BATTERY FET
TO CHARGING CONTACTS
201
205
BATTERY POLLING
PHONE POLLING
206
TO CHARGING CONNECTOR
202
PHONE FET
FROM EXTERNAL POWER
CONTROLLER
1
200

FIG. 2

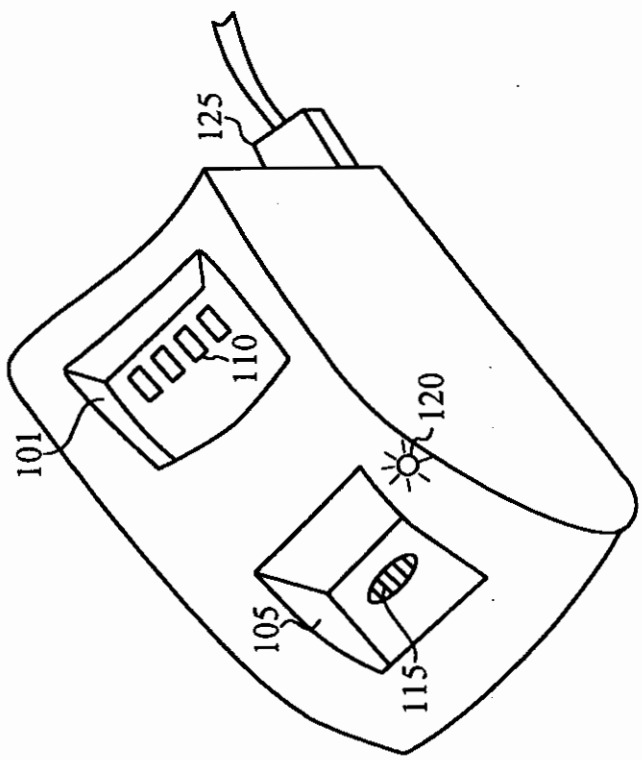

FIG. 1

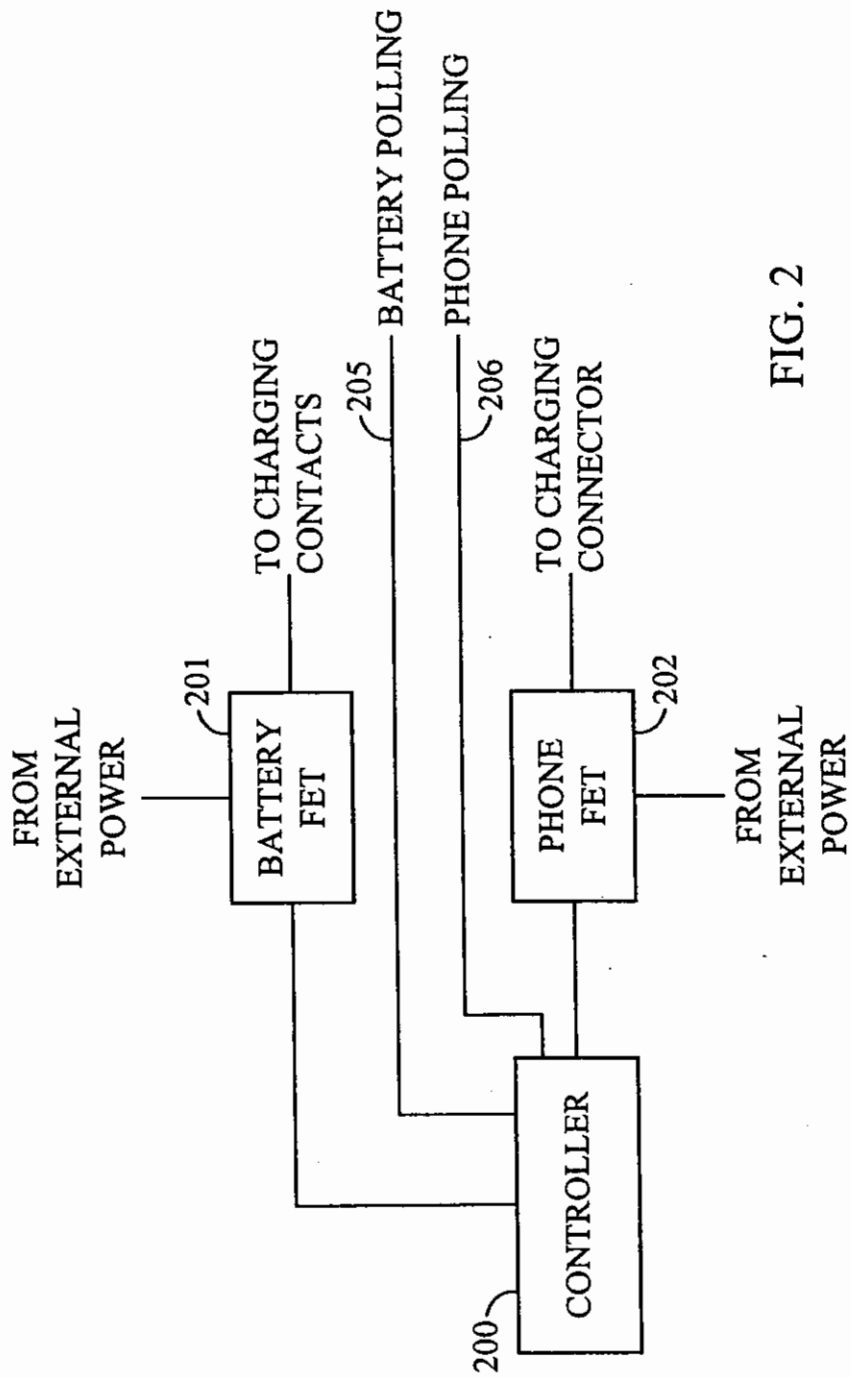
FROM EXTERNAL POWER
201
BATTERY FET
TO CHARGING CONTACTS
205
BATTERY POLLING
206
PHONE POLLING
TO CHARGING CONNECTOR
202
PHONE FET
FROM EXTERNAL POWER
CONTROLLER
200

FIG. 2