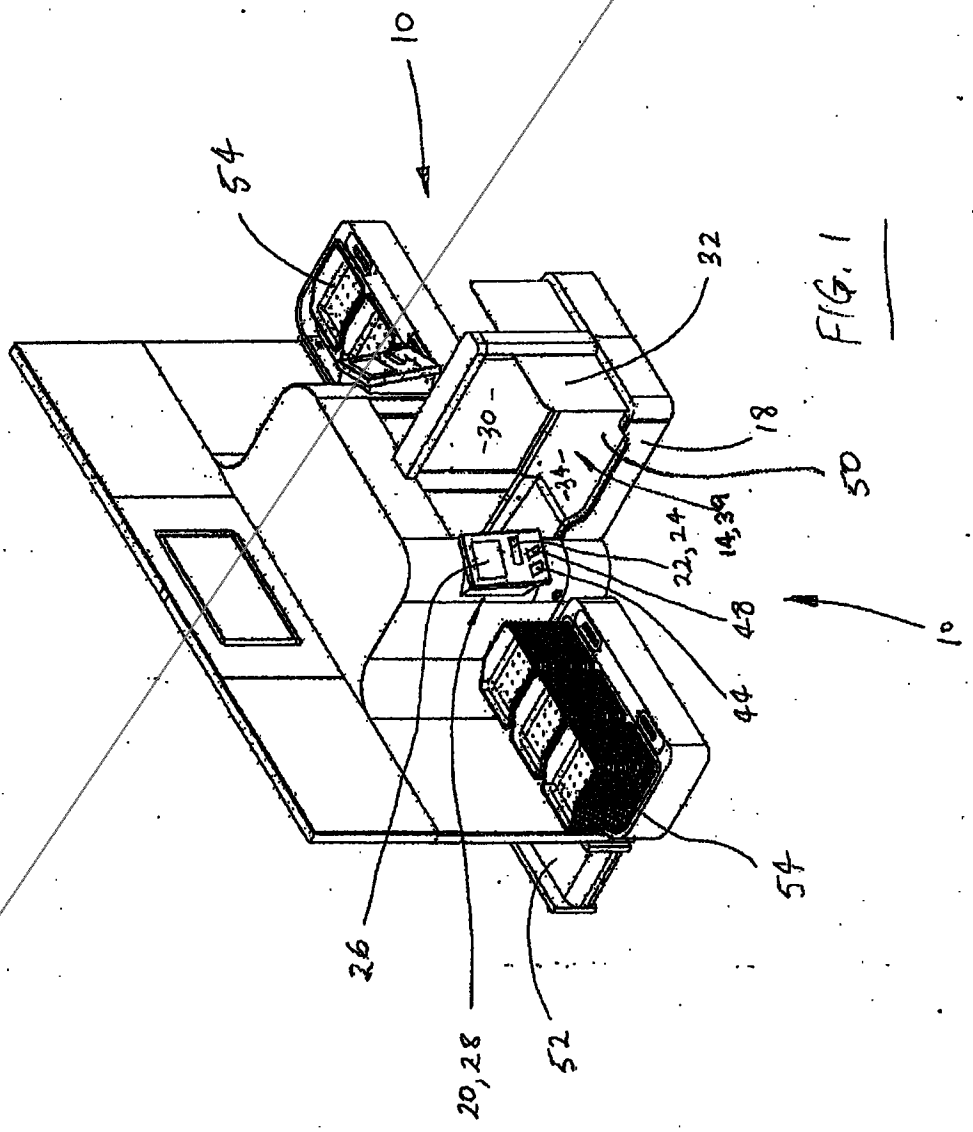

FIG. 1

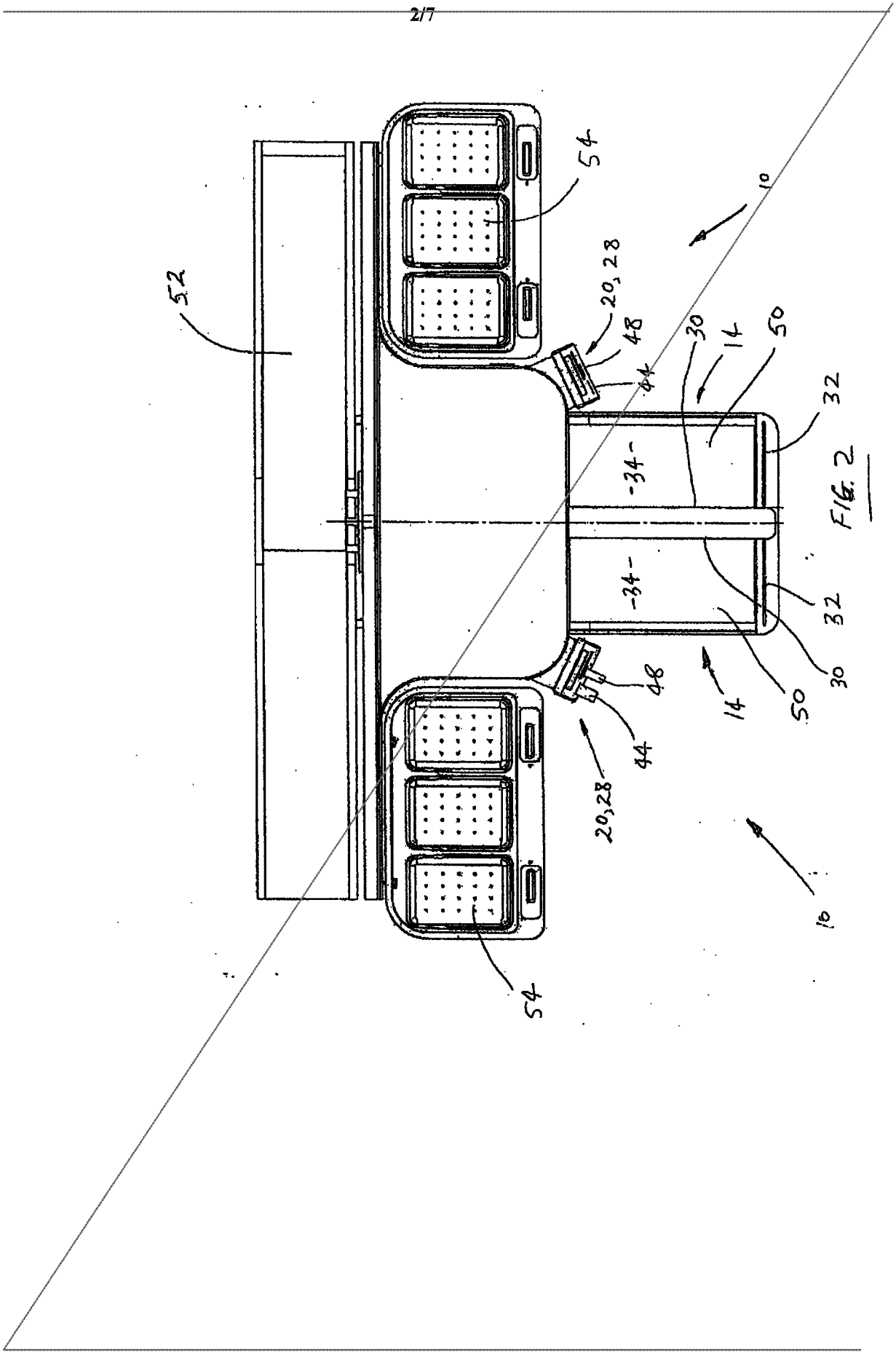

FIG. 2

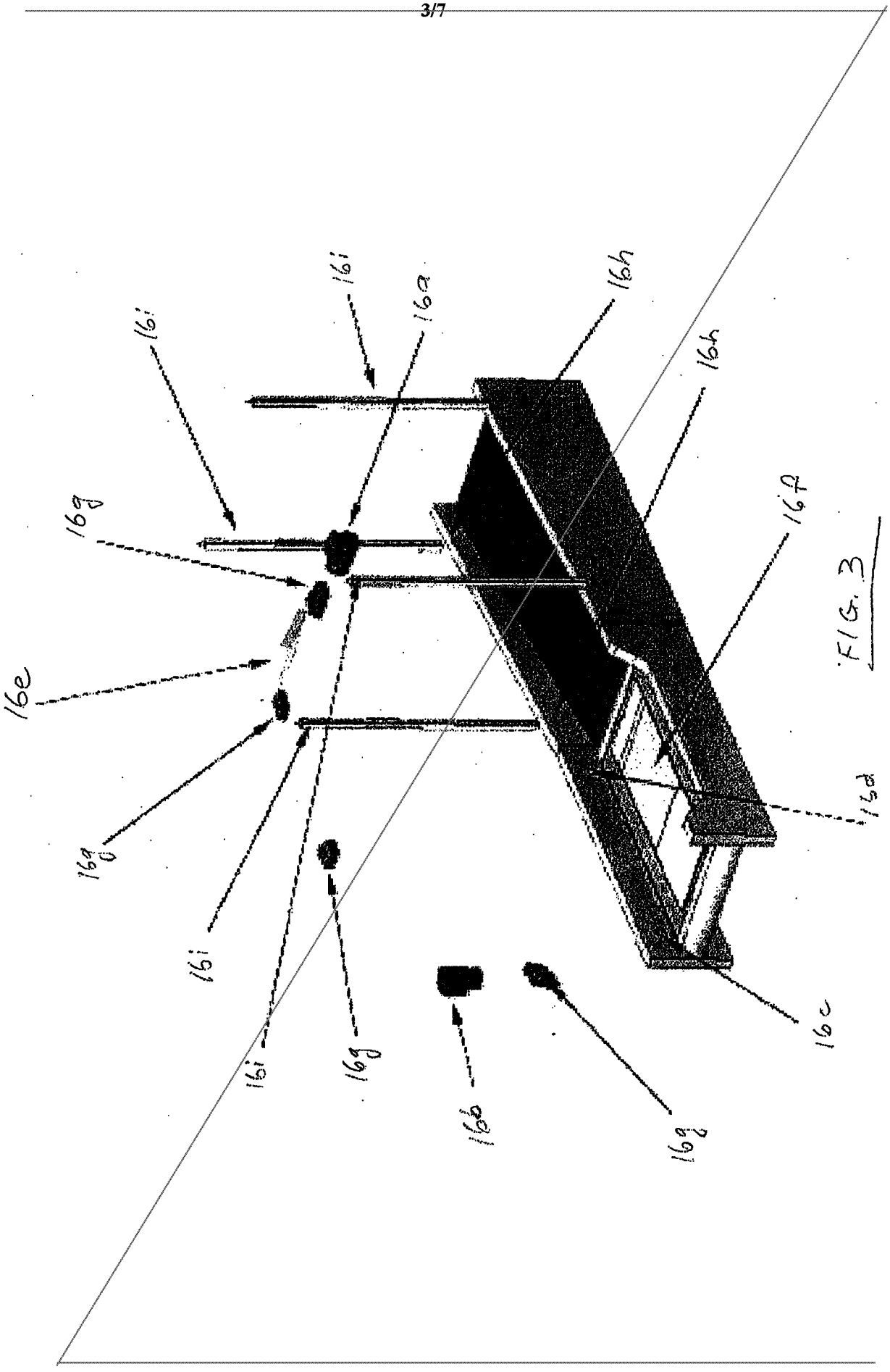

FIG. 3

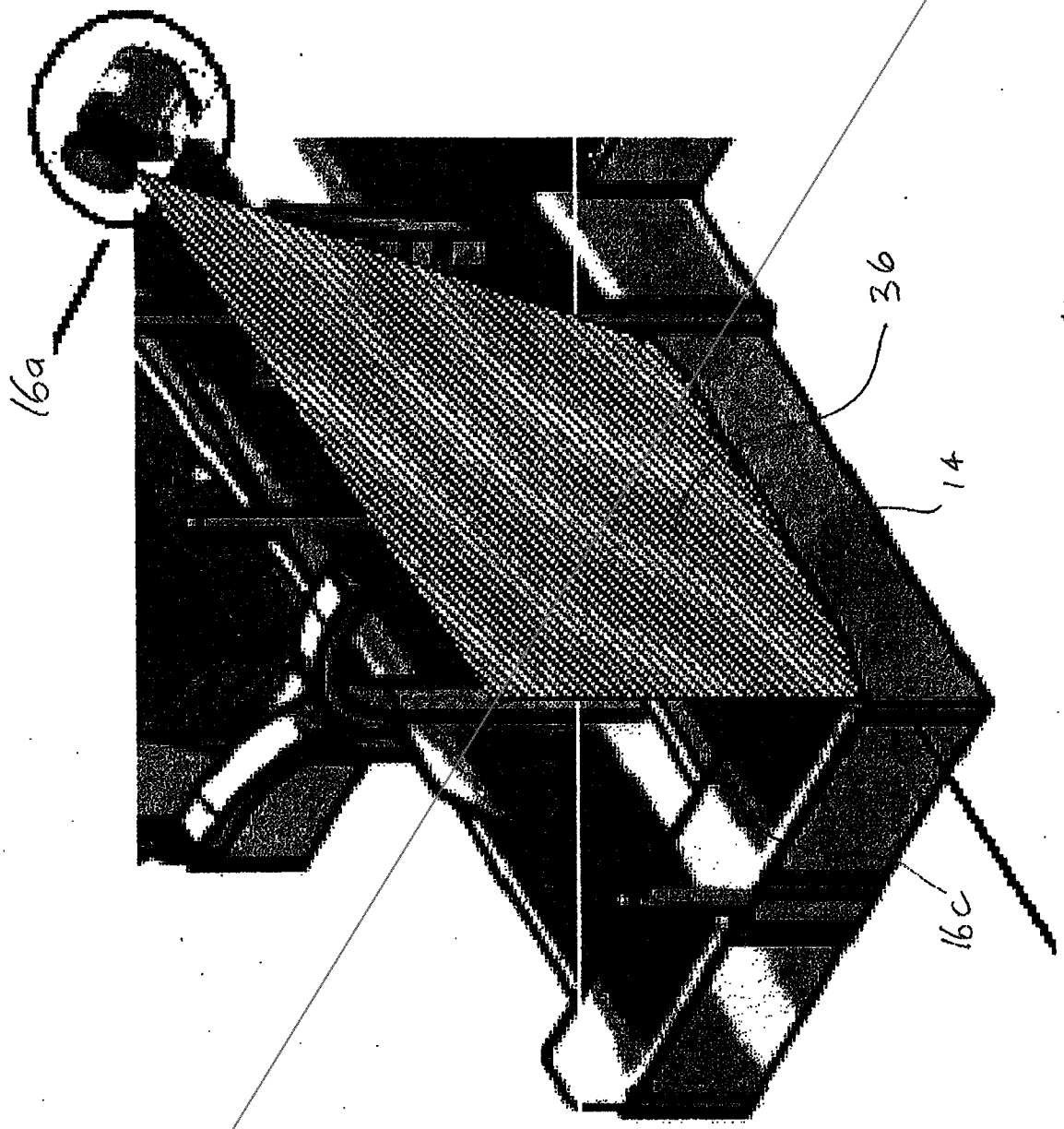

FIG. 4

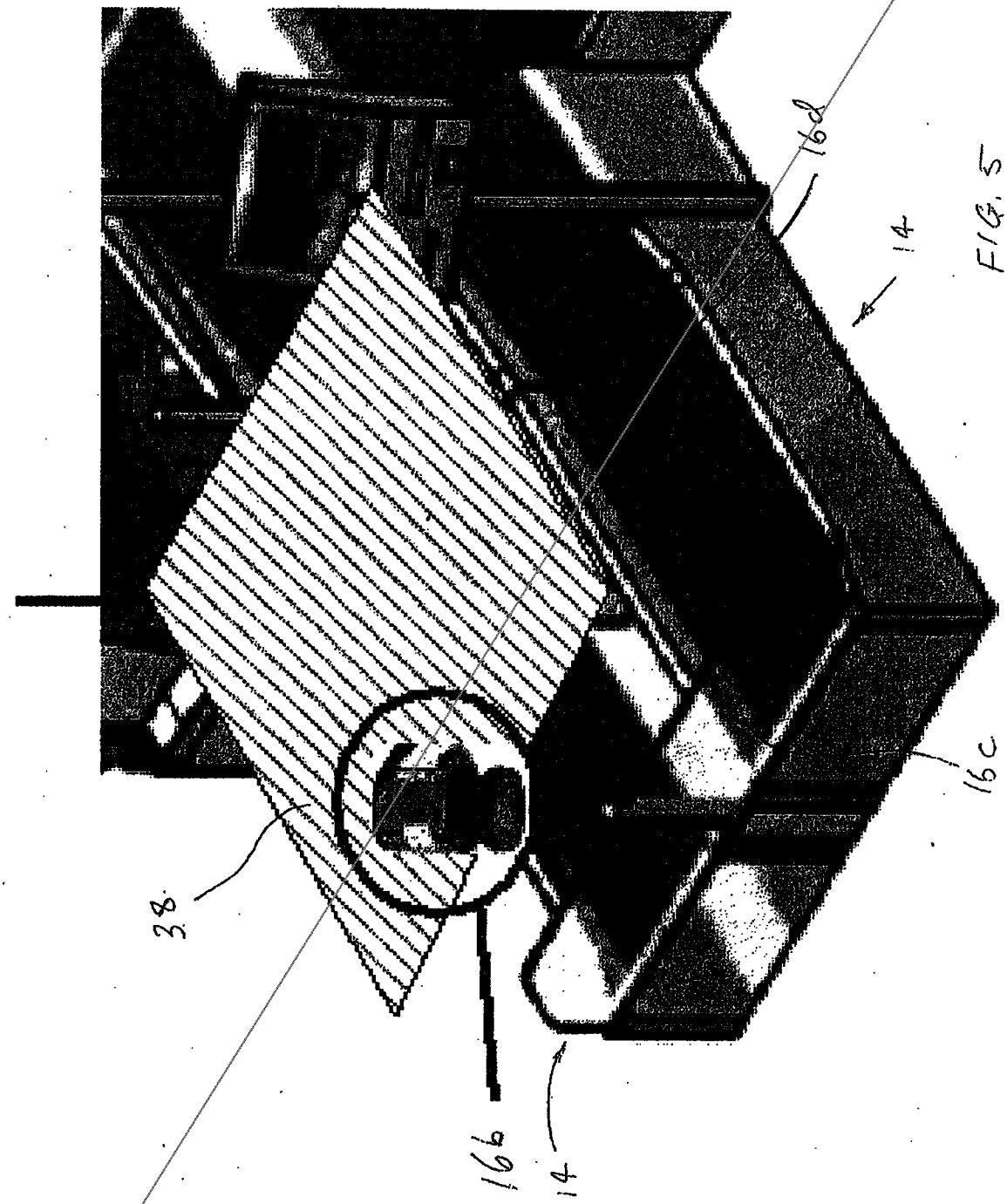

FIG. 5

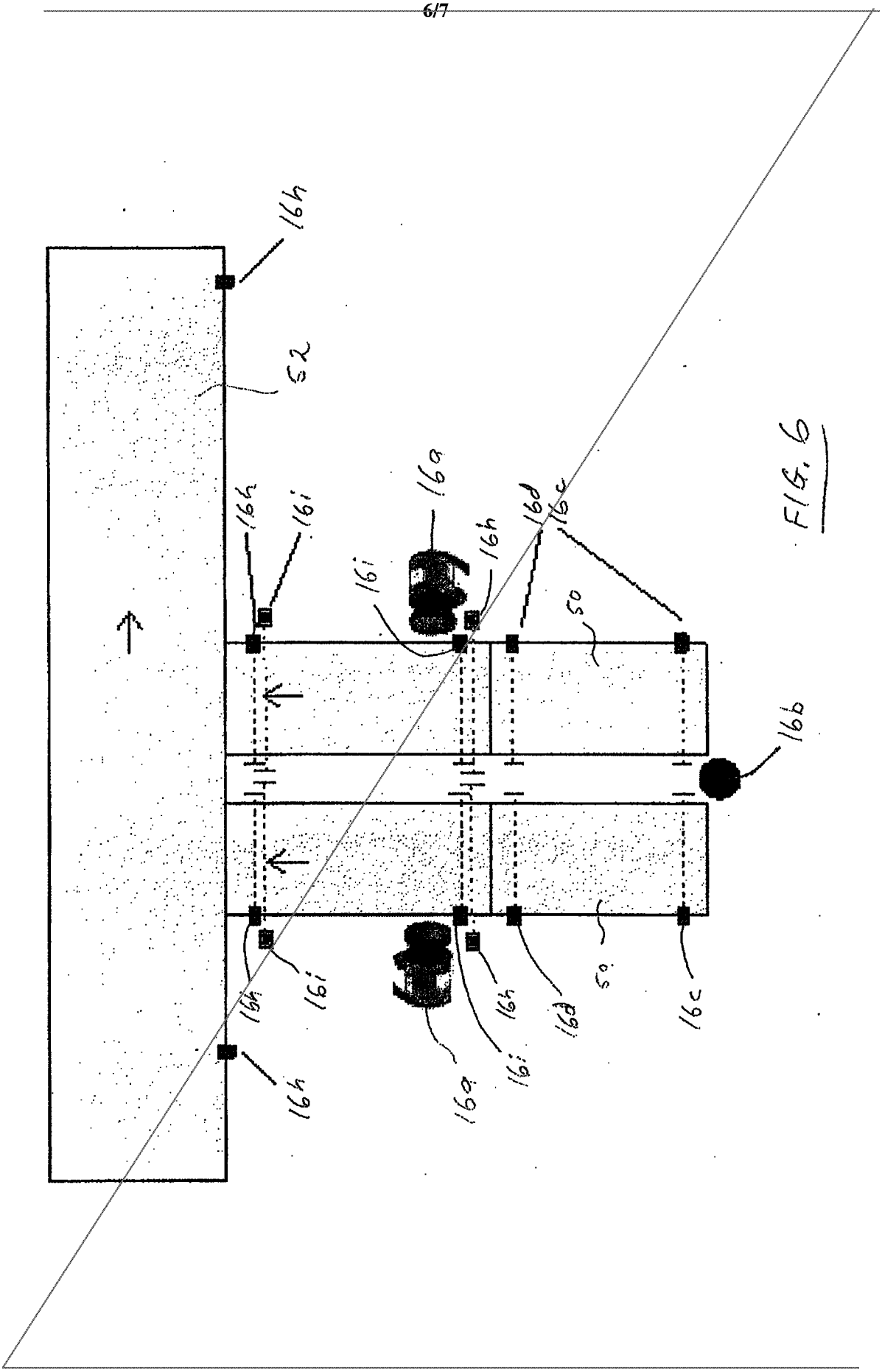
16h
52
16h
16i
16a
16i
16h
16d
16c
50
16b
16h
16i
16a
16i
16h
16d
50
16c
16h

FIG. 6

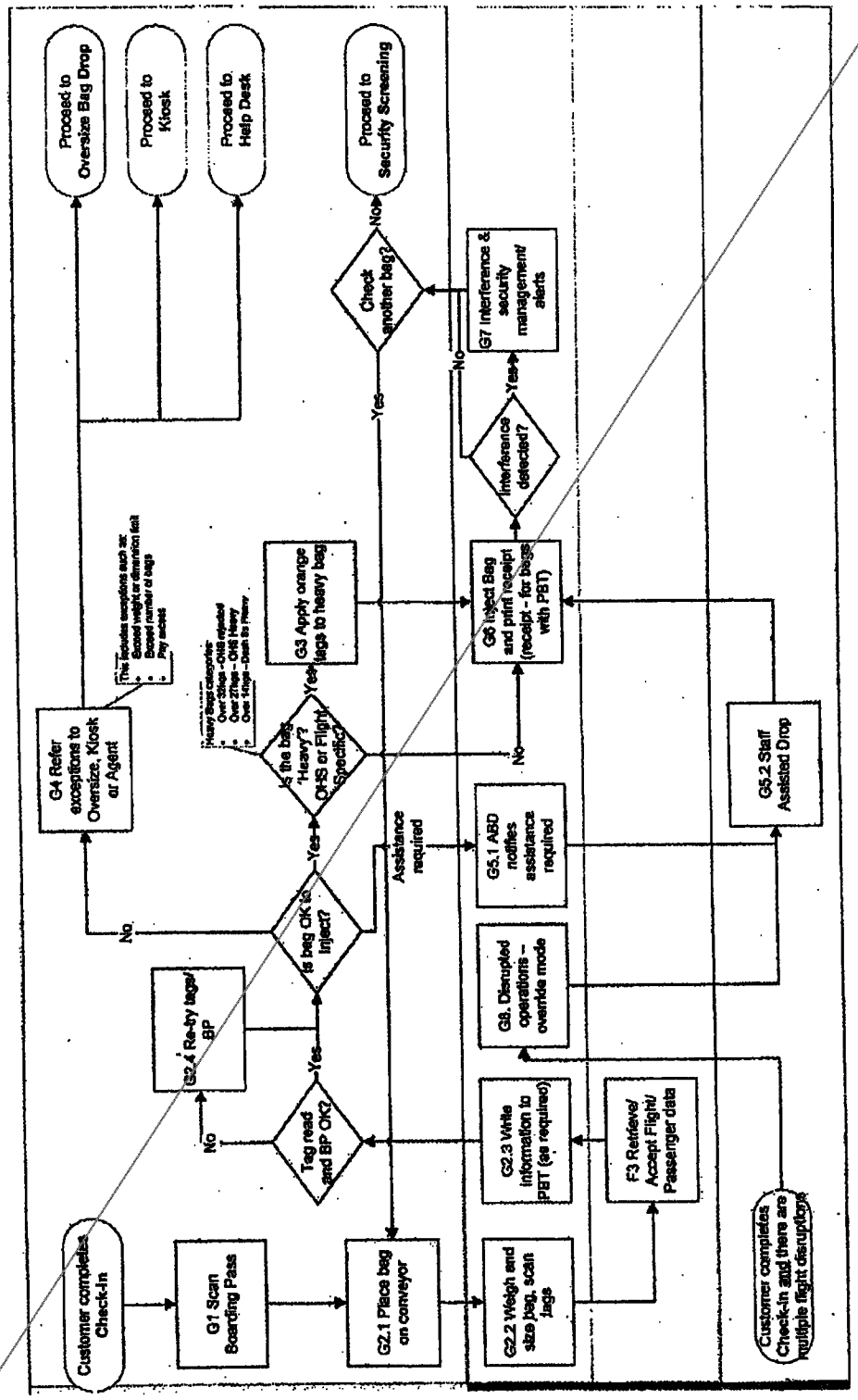
Customer completes Check-in
G1 Scan Boarding Pass
G2.1 Place bag on conveyor
G2.2 Weigh and size bag, scan tags
G2.3 Write information to PBT (as required)
F3 Retrieve/ Accept Flight/ Passenger data
Customer completes Check-in and there are multiple flight disruptions
Tag read and BP OK?
No
G2.4 Re-try tags/ BP
Is bag OK to inject?
Yes
No
G4 Refer exceptions to Oversize, Kiosk or Agent
Is the bag 'Heavy'? OHS or Flight Specific?
Yes
No
G3 Apply orange tags to heavy bag
Assistance required
G5.1 ABD notifies assistance required
G5.2 Staff Assisted Drop
G8. Disrupted operations – override mode
G6 Inject Bag and print receipt (receipt - for bags with PBT)
Interference detected?
Yes
No
G7 Interference & security management/ alerts
Check another bag?
No
Yes
Proceed to Security Screening
Proceed to Oversize Bag Drop
Proceed to Kiosk
Proceed to Help Desk

FIG. 7

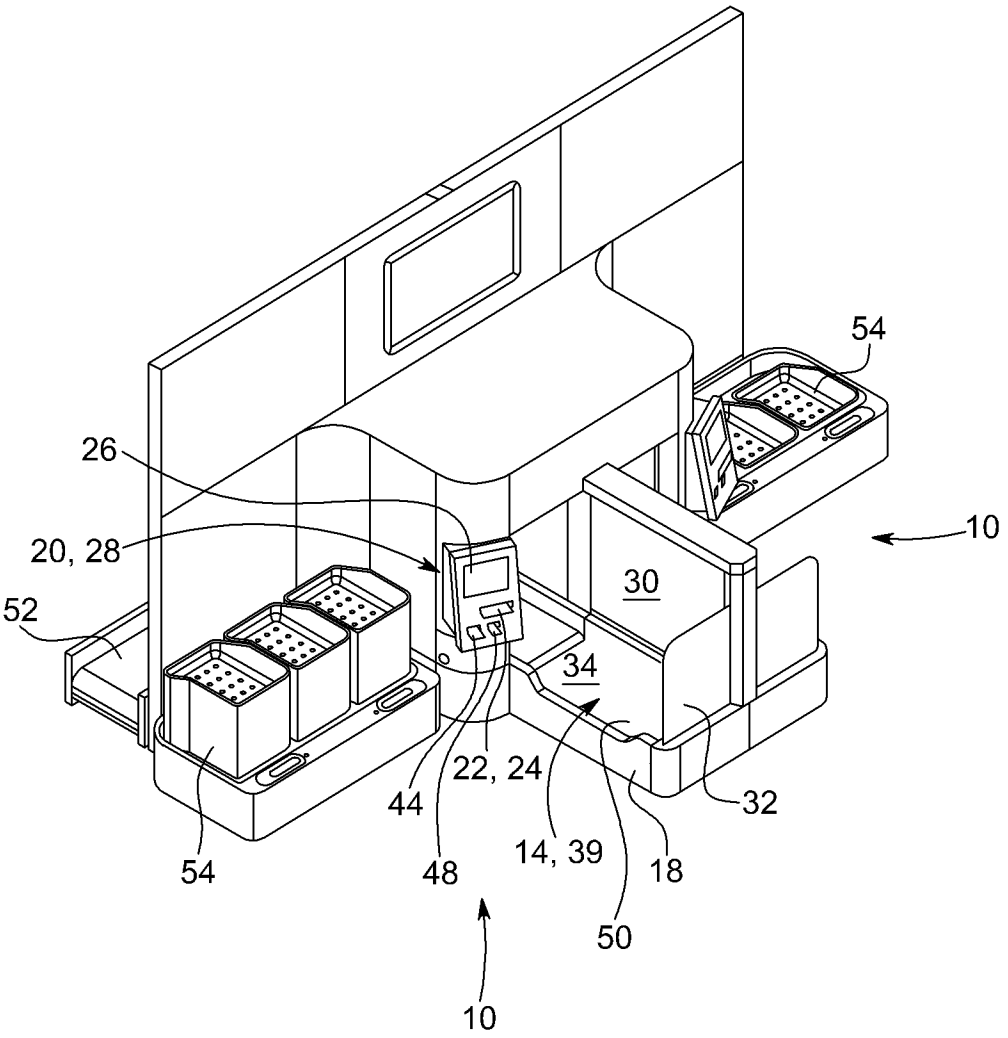

FIG. 1

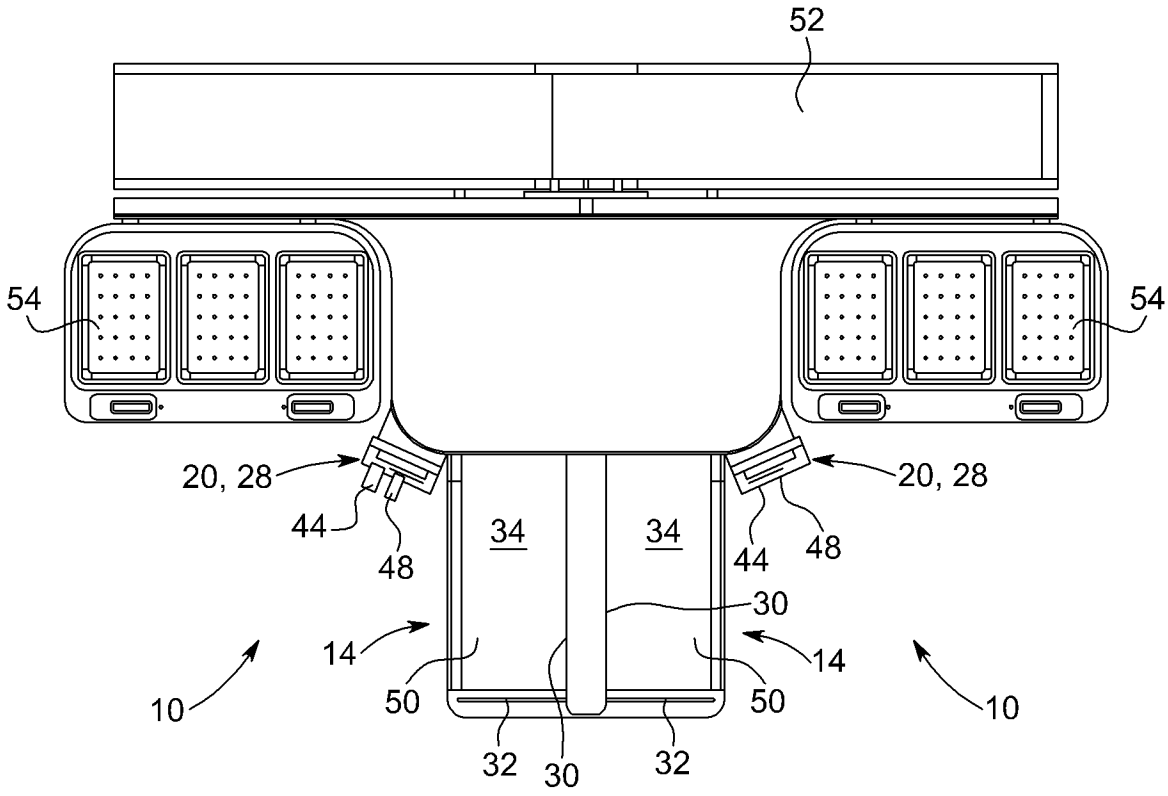

FIG. 2

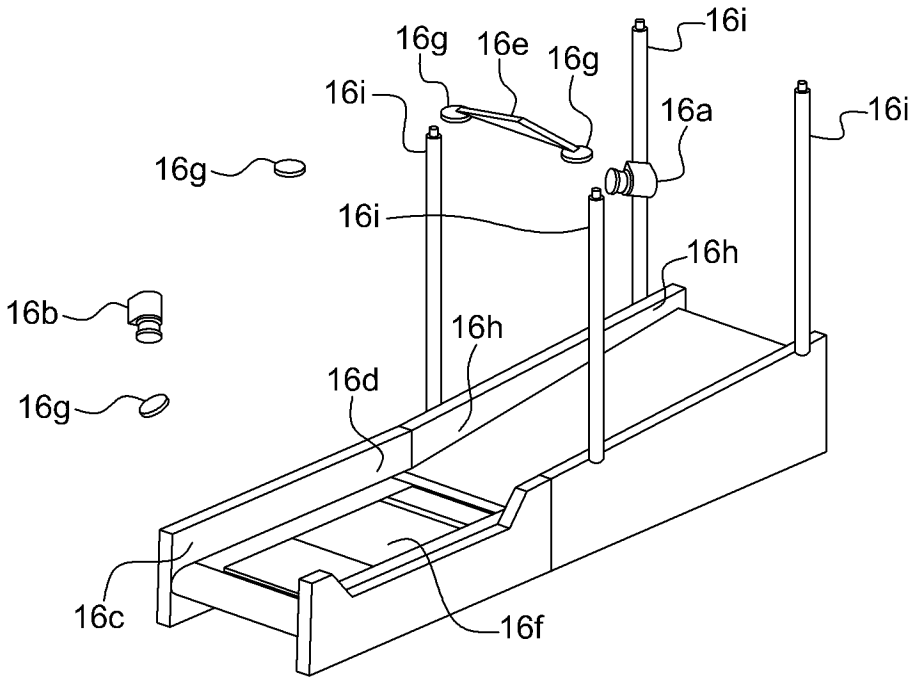

FIG. 3

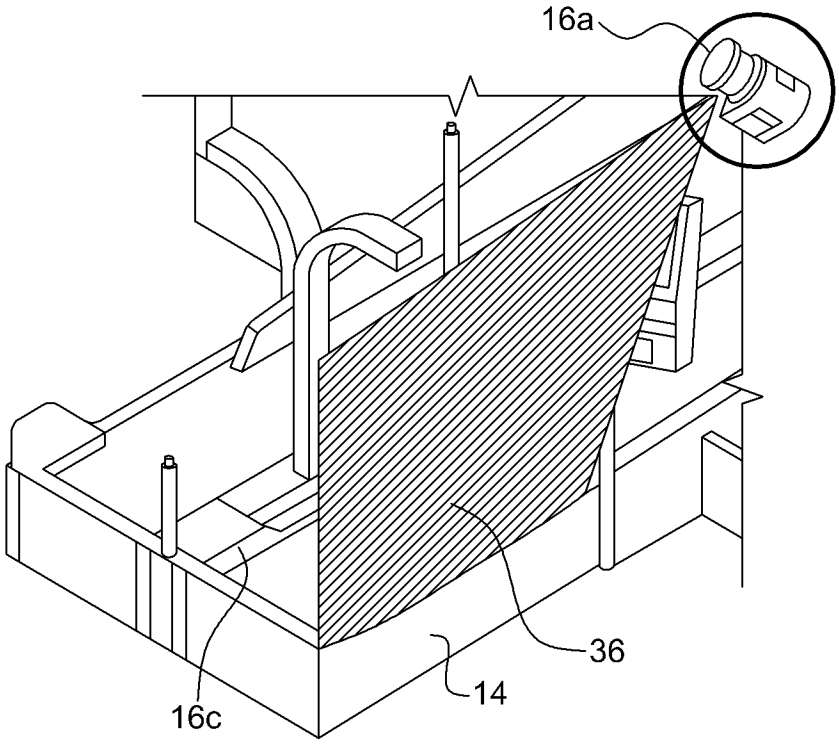

FIG. 4

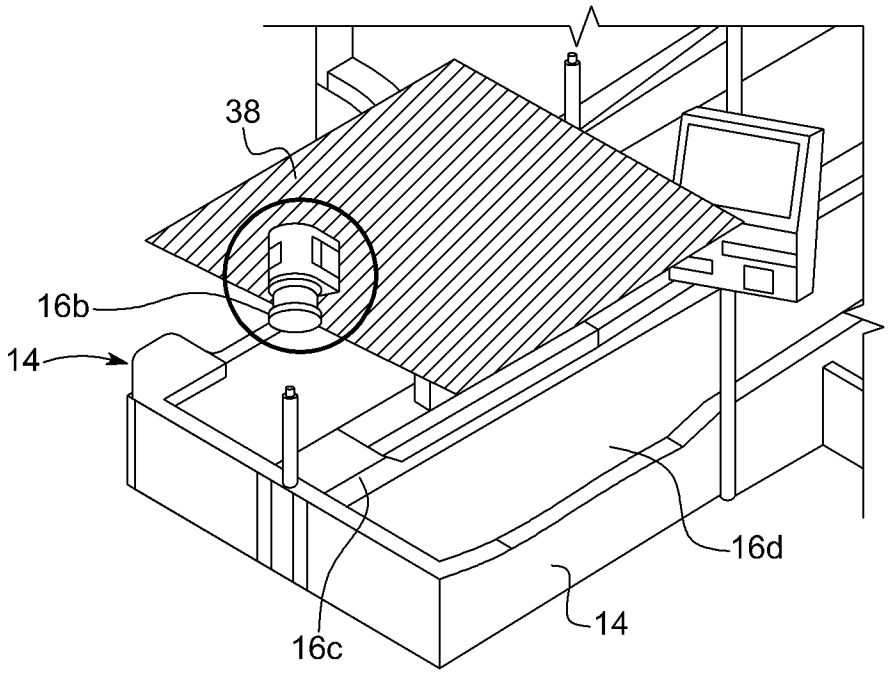

FIG. 5

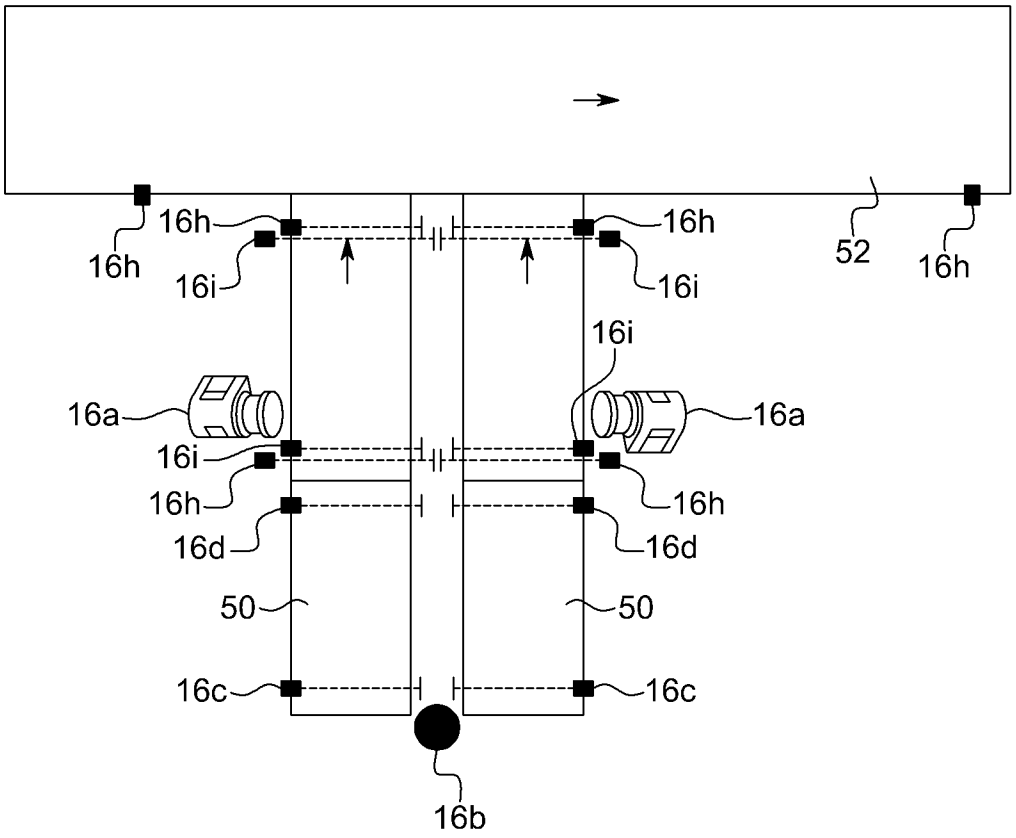
16h
16h
16i
16h
16i
52
16h
16i
16a
16a
16i
16h
16h
16d
16d
50
50
16c
16c
16b

FIG. 6

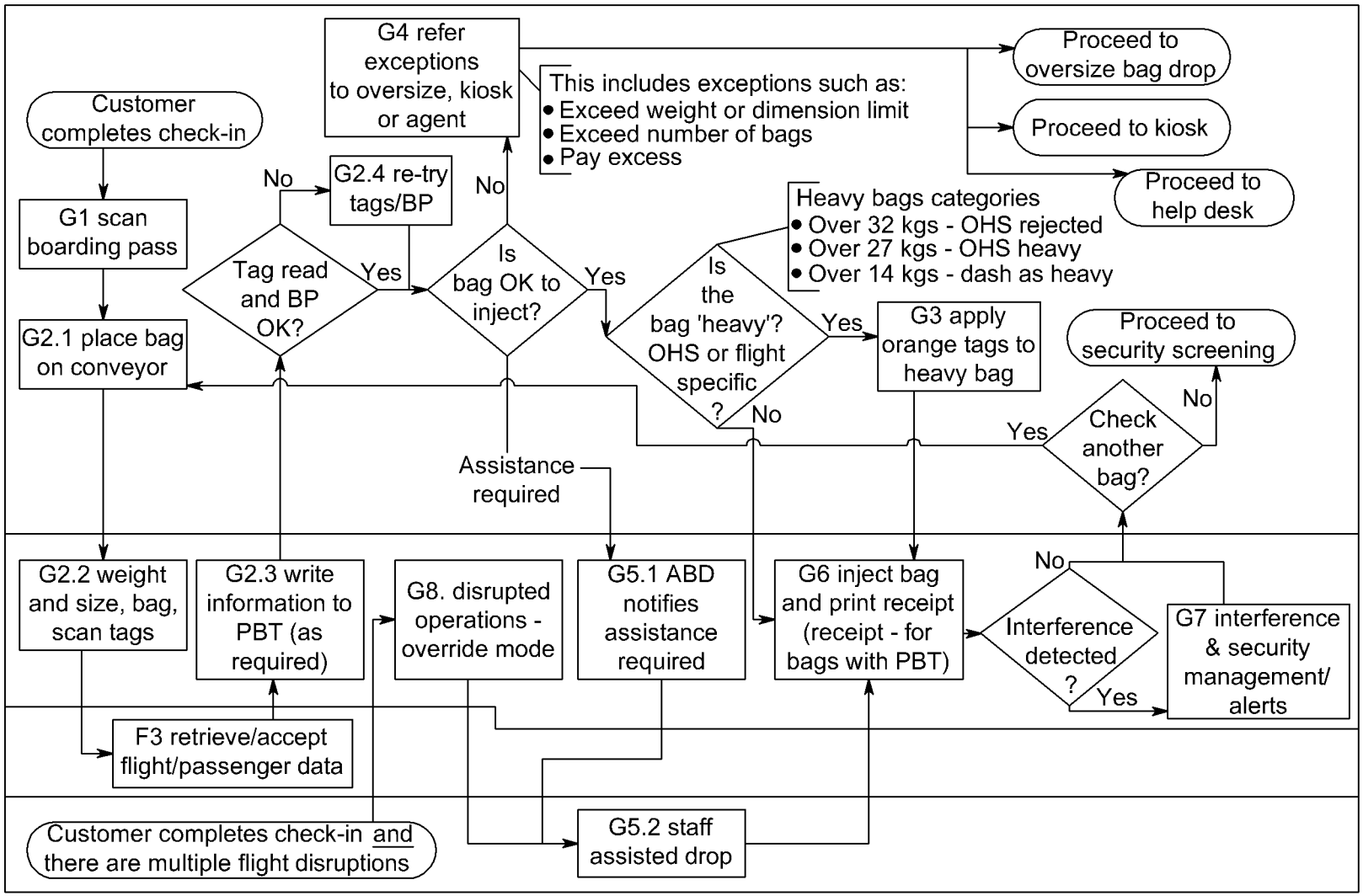
Customer completes check-in
G1 scan boarding pass
G2.1 place bag on conveyor
G2.2 weight and size, bag, scan tags
F3 retrieve/accept flight/passenger data
Customer completes check-in and there are multiple flight disruptions
Tag read and BP OK?
No
G2.4 re-try tags/BP
Yes
G2.3 write information to PBT (as required)
G4 refer exceptions to oversize, kiosk or agent
This includes exceptions such as:
• Exceed weight or dimension limit
• Exceed number of bags
• Pay excess
Proceed to oversize bag drop
Proceed to kiosk
Proceed to help desk
Is bag OK to inject?
No
Yes
Assistance required
G8. disrupted operations - override mode
G5.1 ABD notifies assistance required
G5.2 staff assisted drop
Heavy bags categories
• Over 32 kgs - OHS rejected
• Over 27 kgs - OHS heavy
• Over 14 kgs - dash as heavy
Is the bag 'heavy'? OHS or flight specific ?
Yes
No
G3 apply orange tags to heavy bag
G6 inject bag and print receipt (receipt - for bags with PBT)
Interference detected ?
No
Yes
G7 interference & security management/ alerts
Check another bag?
Yes
No
Proceed to security screening

FIG. 7