FIG.1

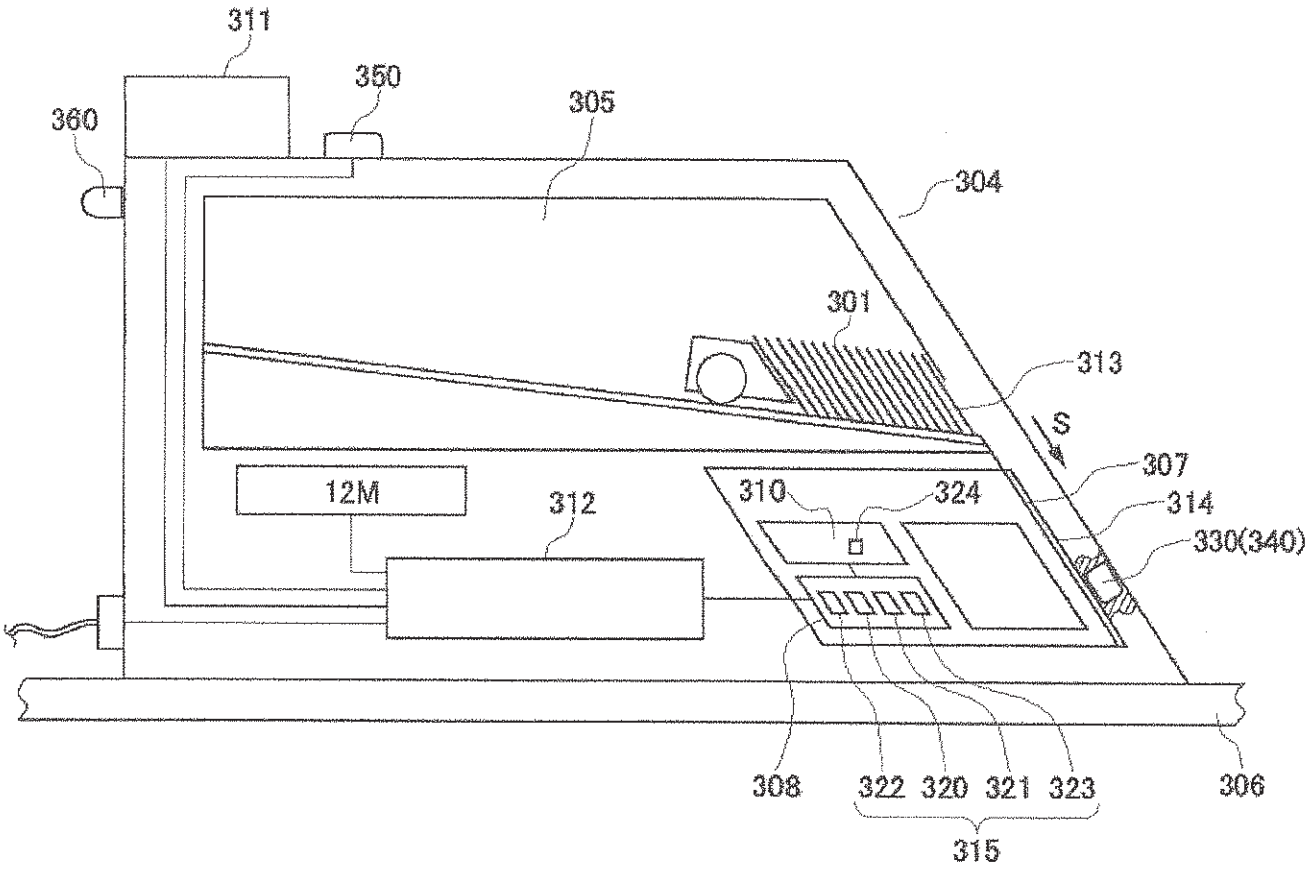
311
350
360
305
304
301
313
S
307
12M
312
310
324
314
330(340)
308
322
320
321
323
306
315

FIG.2

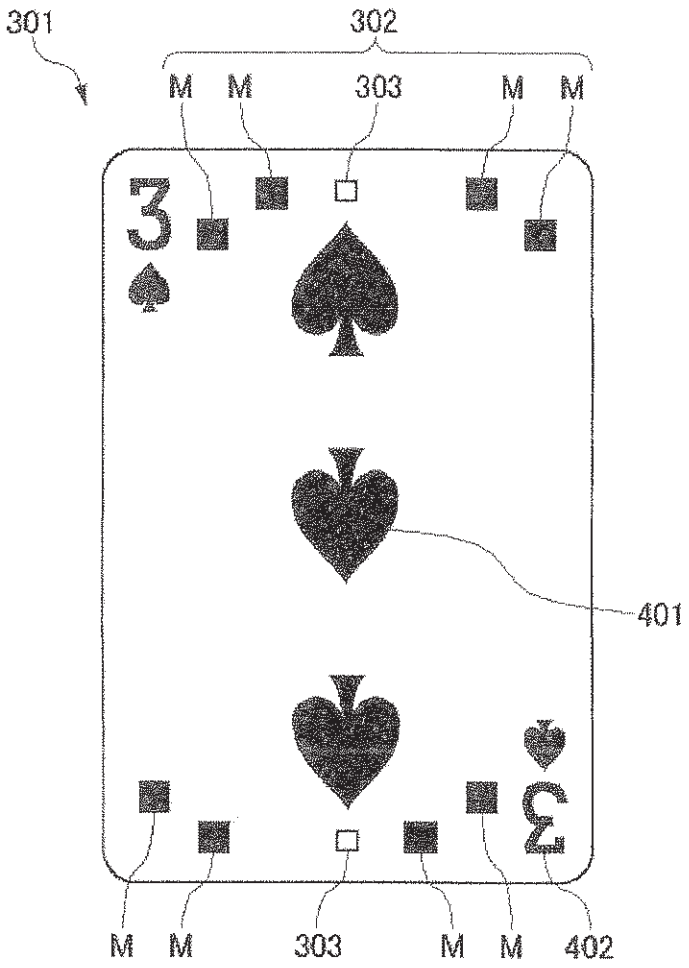

FIG.3

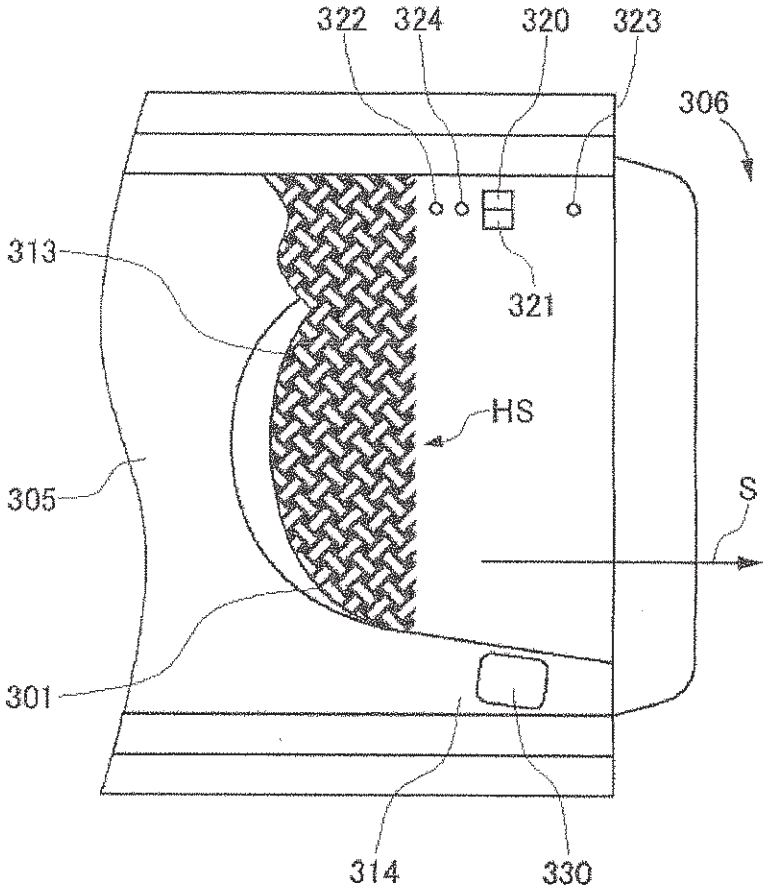

FIG.4

(a)

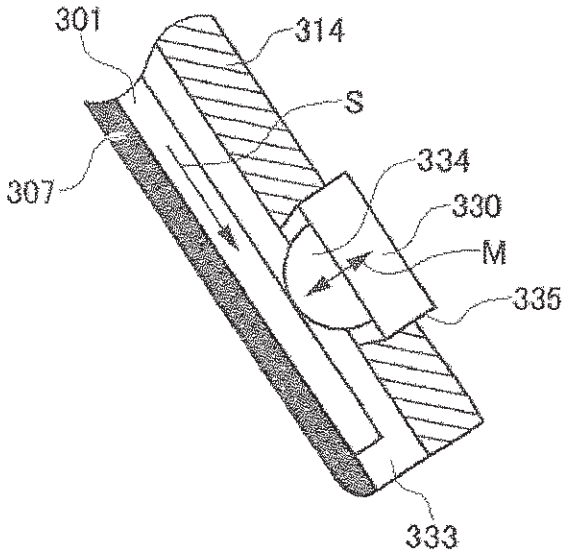

(b)

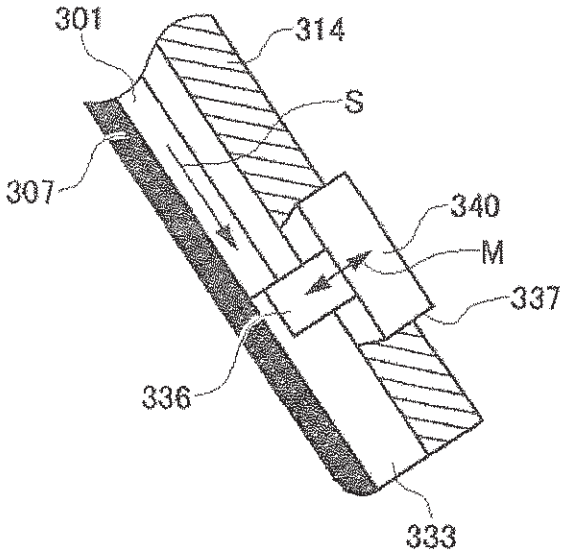

FIG.5

	Marks	Outputs of sensors
1		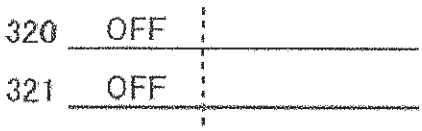
2		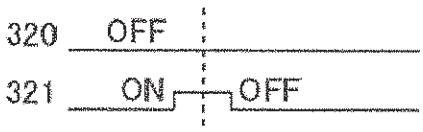
3		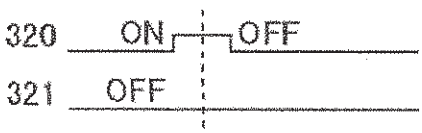
4		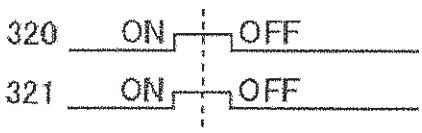

FIG.6

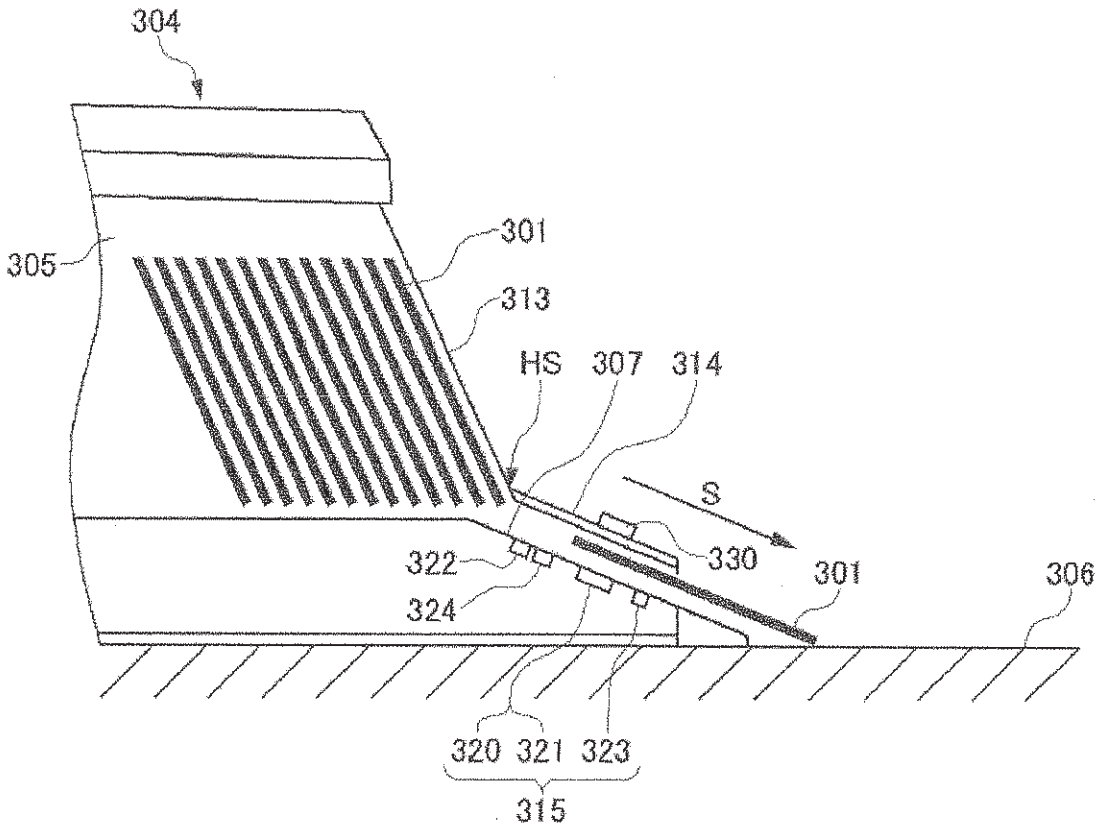

FIG.7

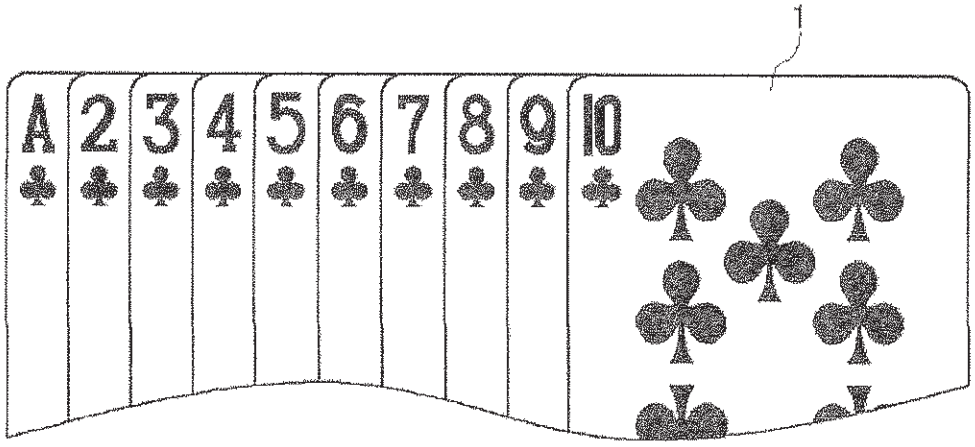

(a)

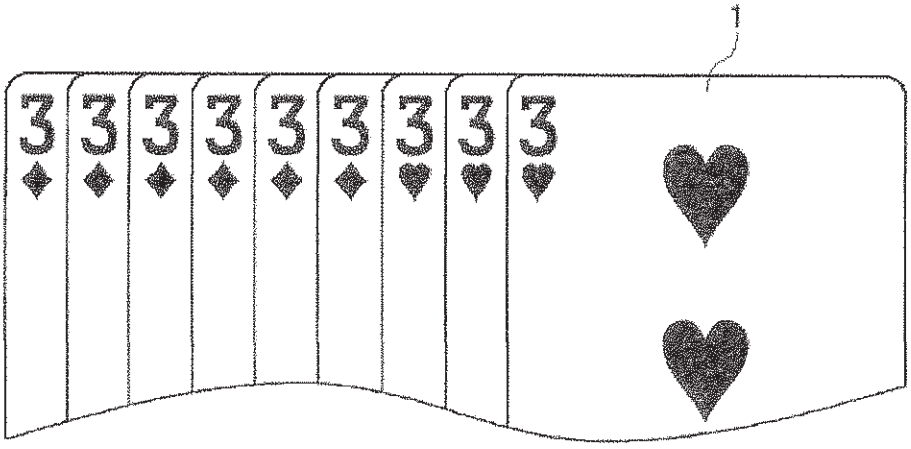

(b)