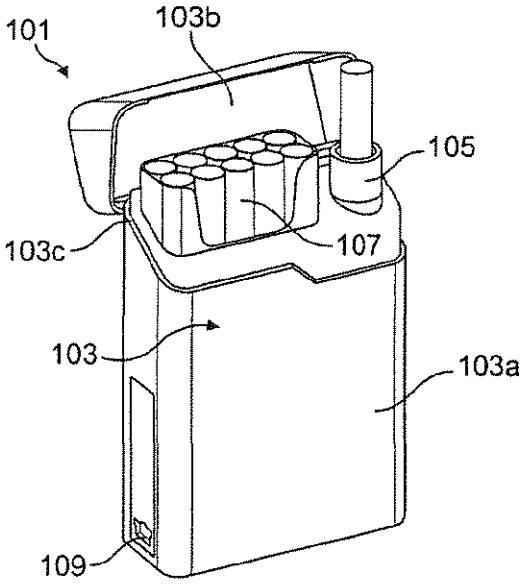

FIG. 1a

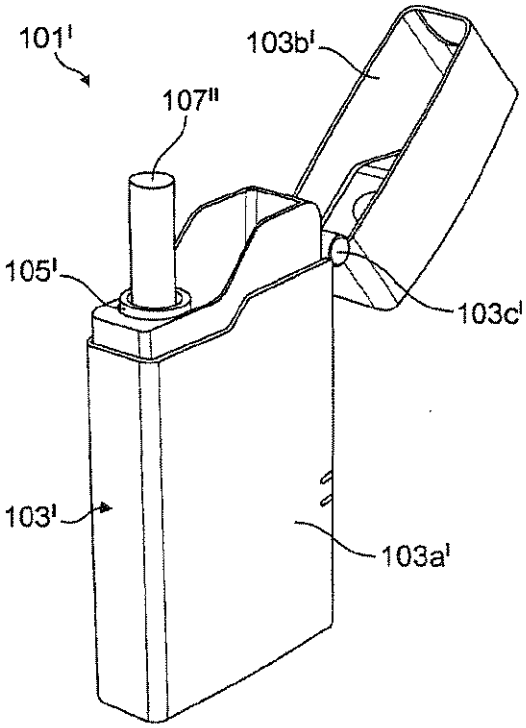

FIG. 1b

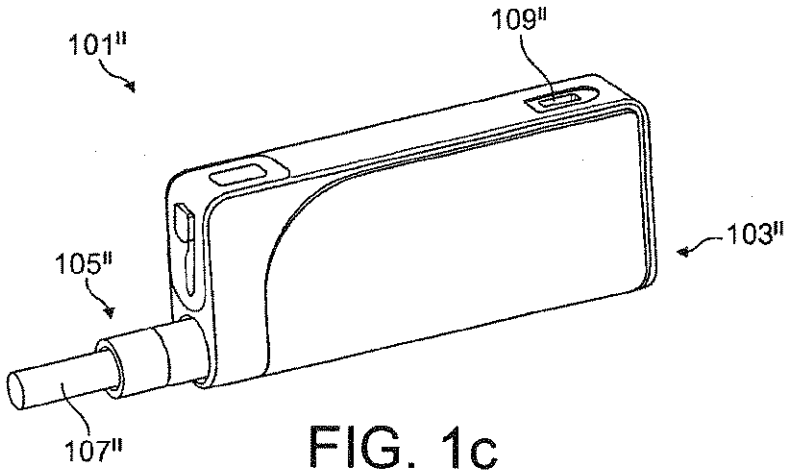

FIG. 1c

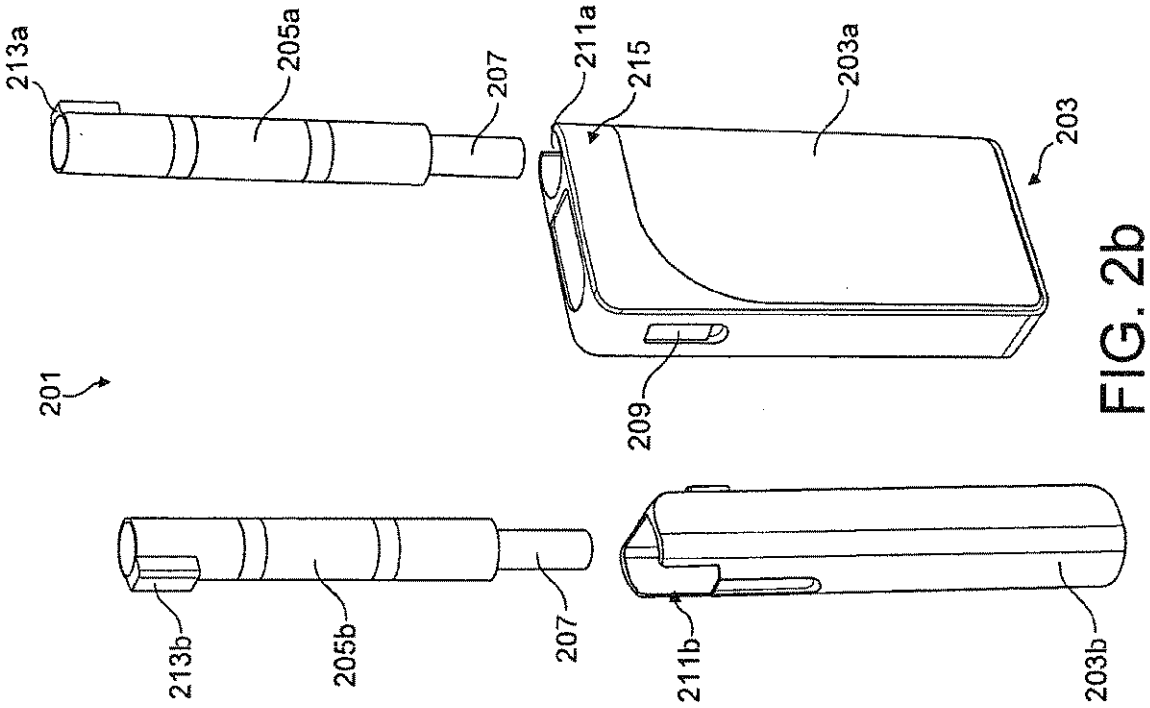
213a
205a
207
211a
215
203a
203
201
209
213b
205b
207
211b
203b

FIG. 2b

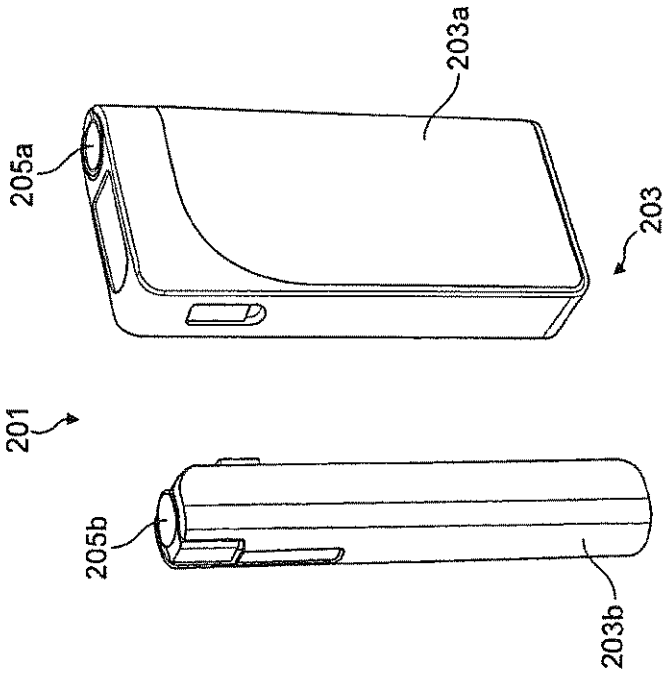
203a
205a
203
201
205b
203b

FIG. 2a

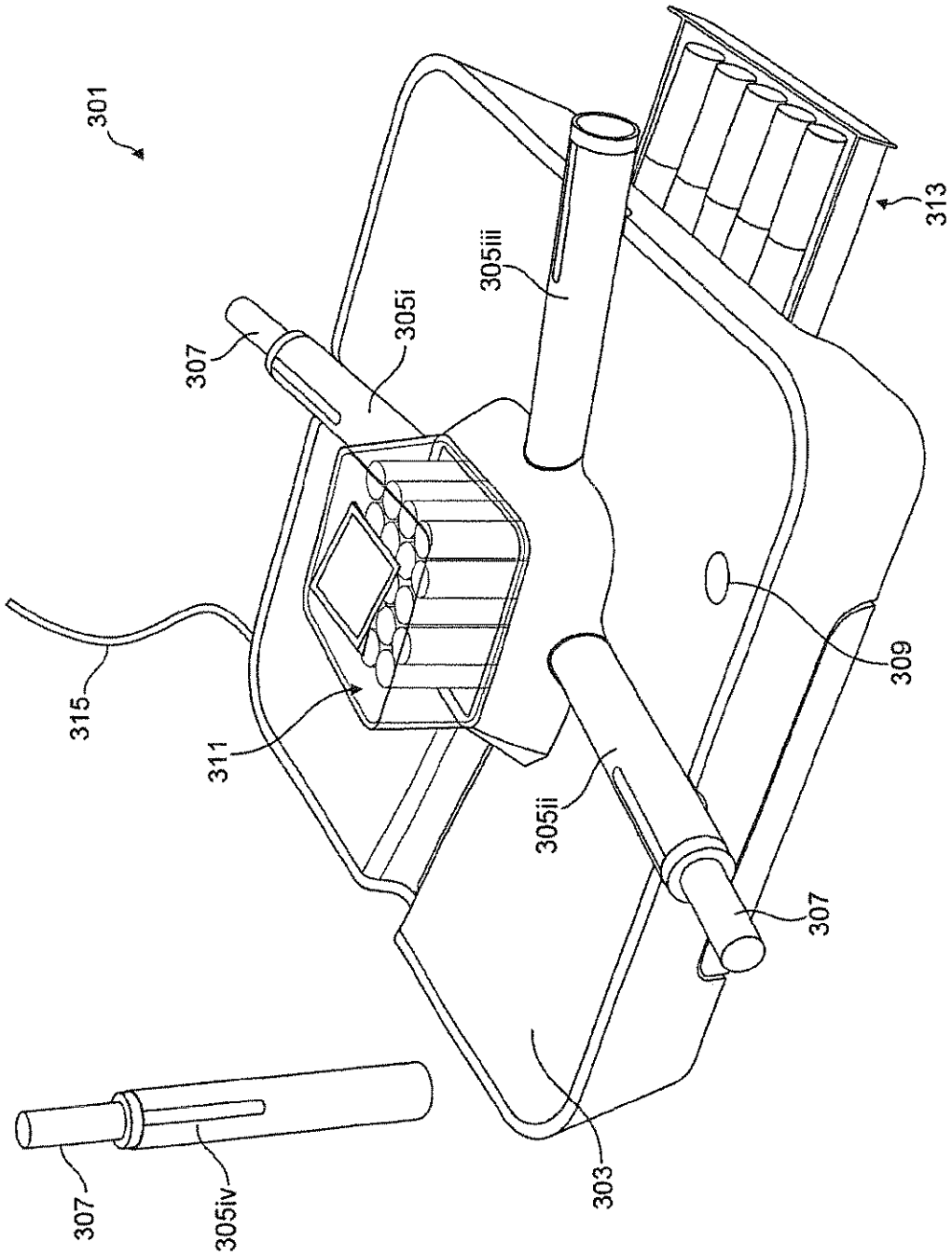

FIG. 3a

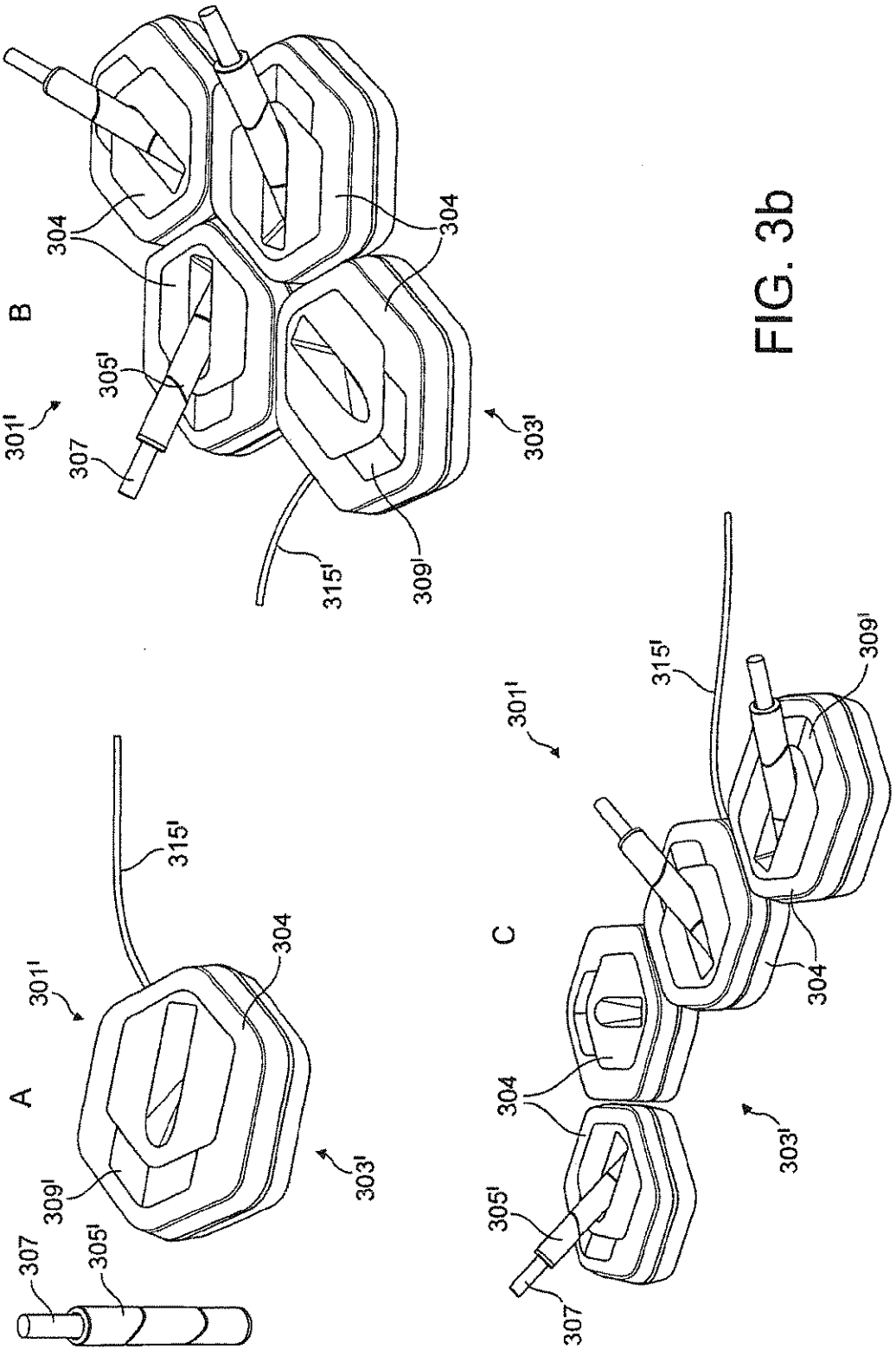

FIG. 3b

Figure 4c

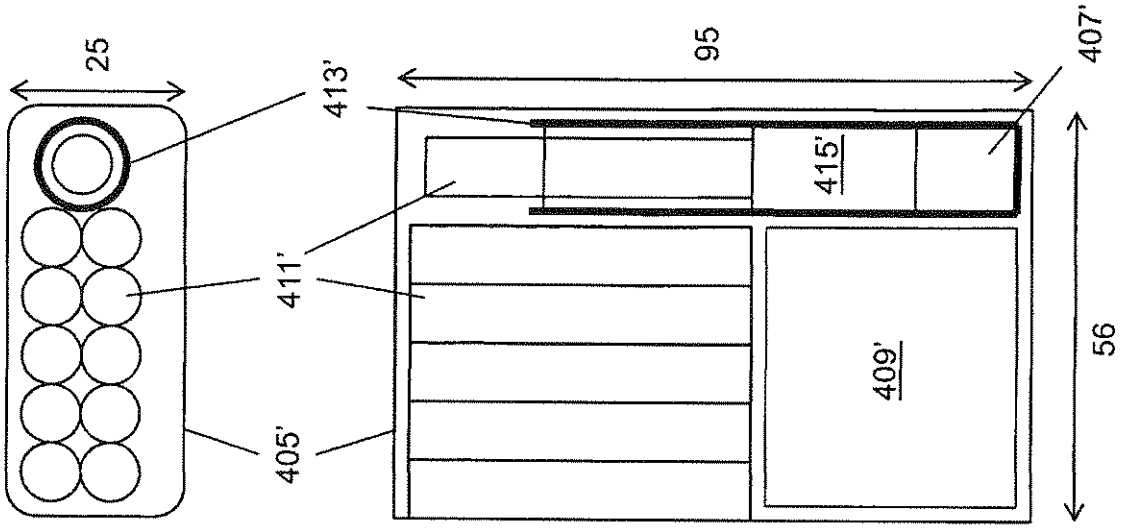

Figure 4b

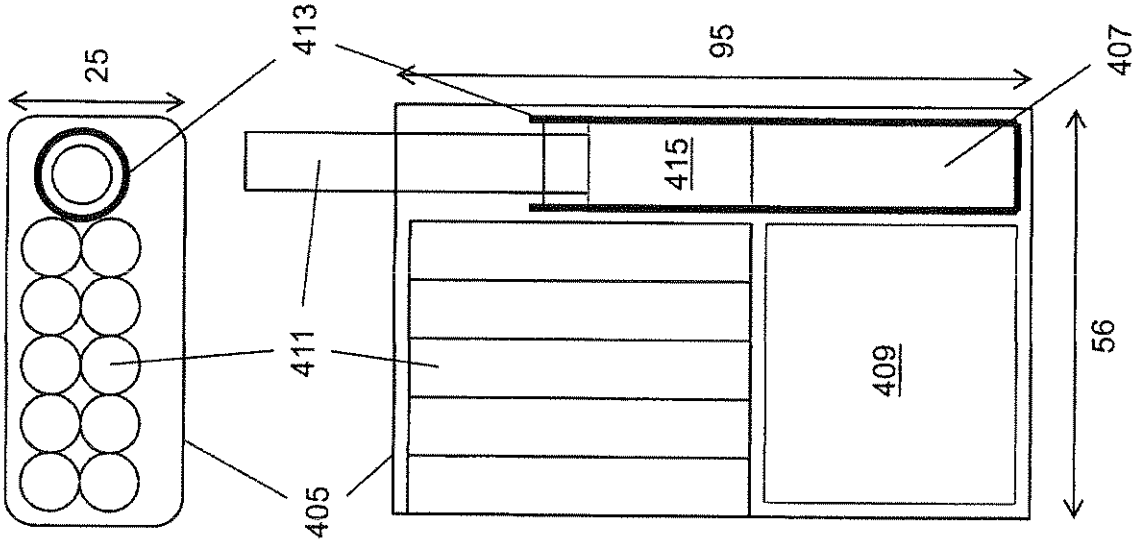

Figure 4a

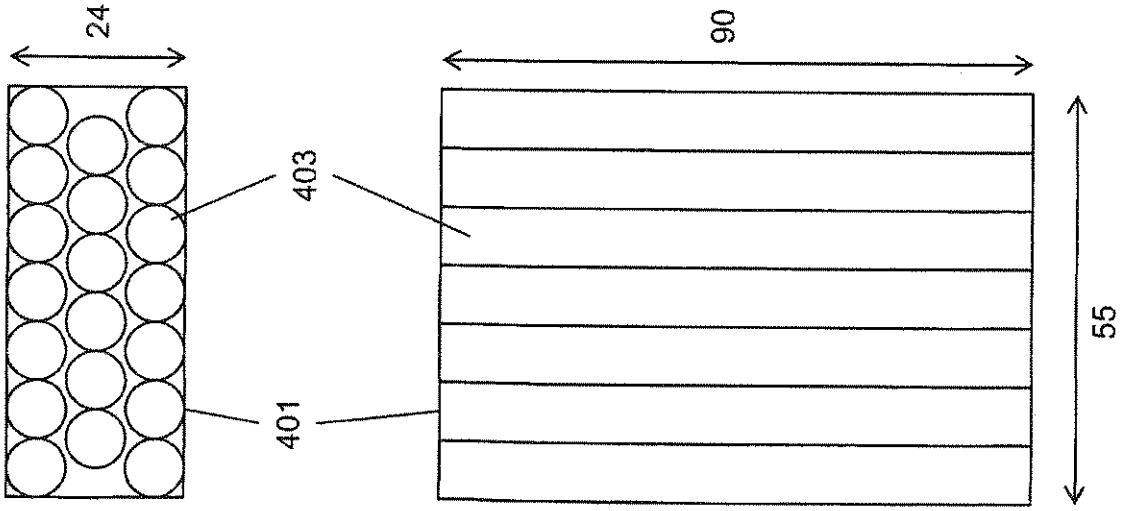

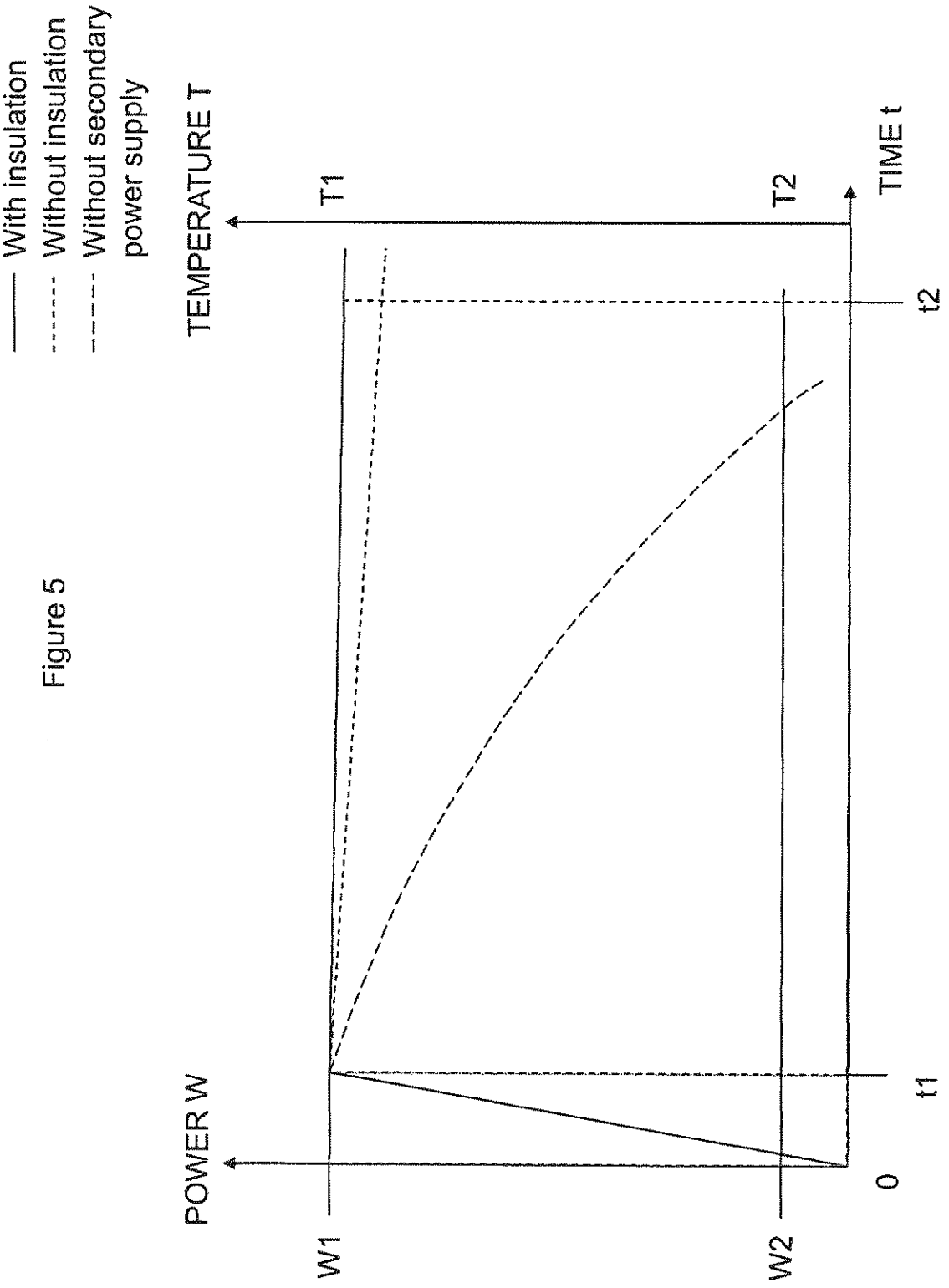
With insulation
Without insulation
Without secondary power supply
TEMPERATURE T
T1
T2
TIME t
t2
t1
0
POWER W
W1
W2

Figure 5