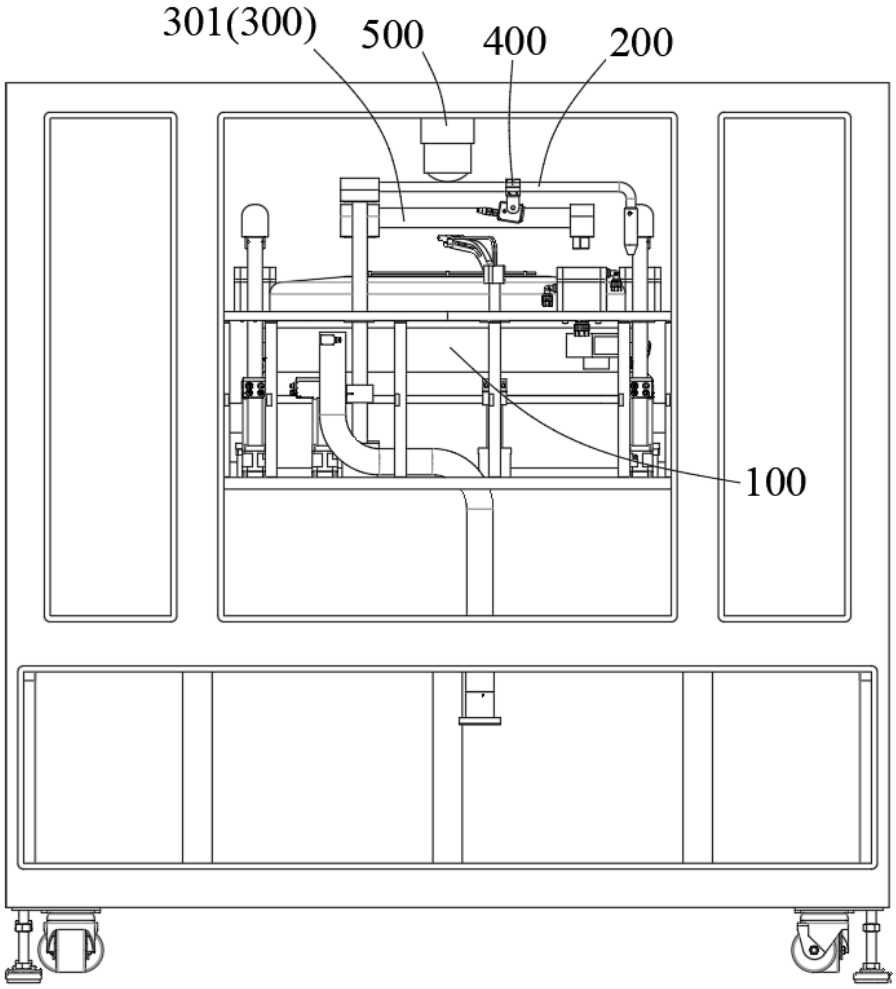

Fig.1

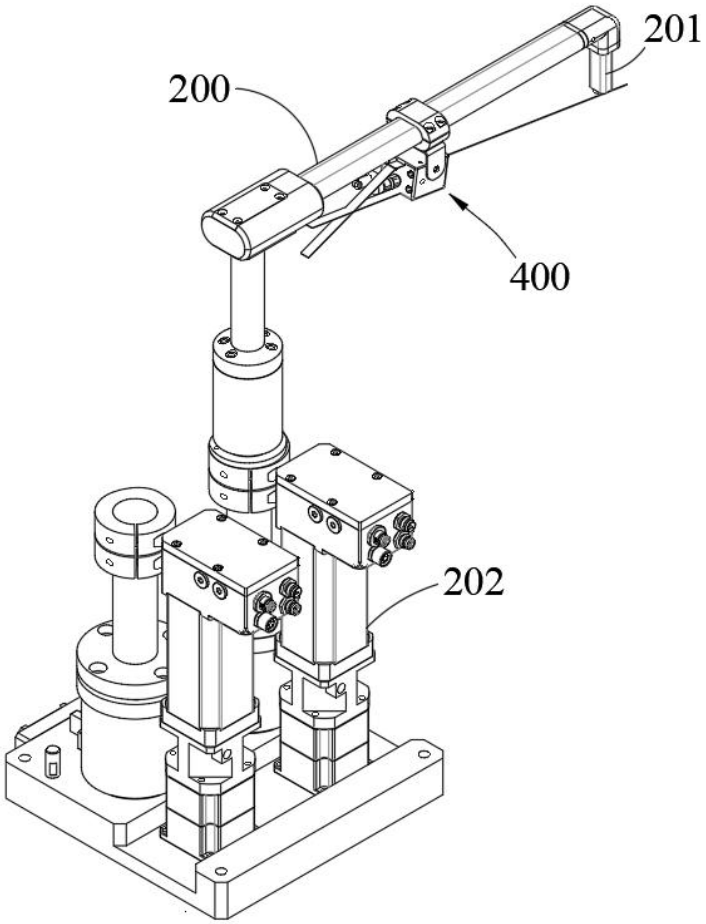

Fig.2

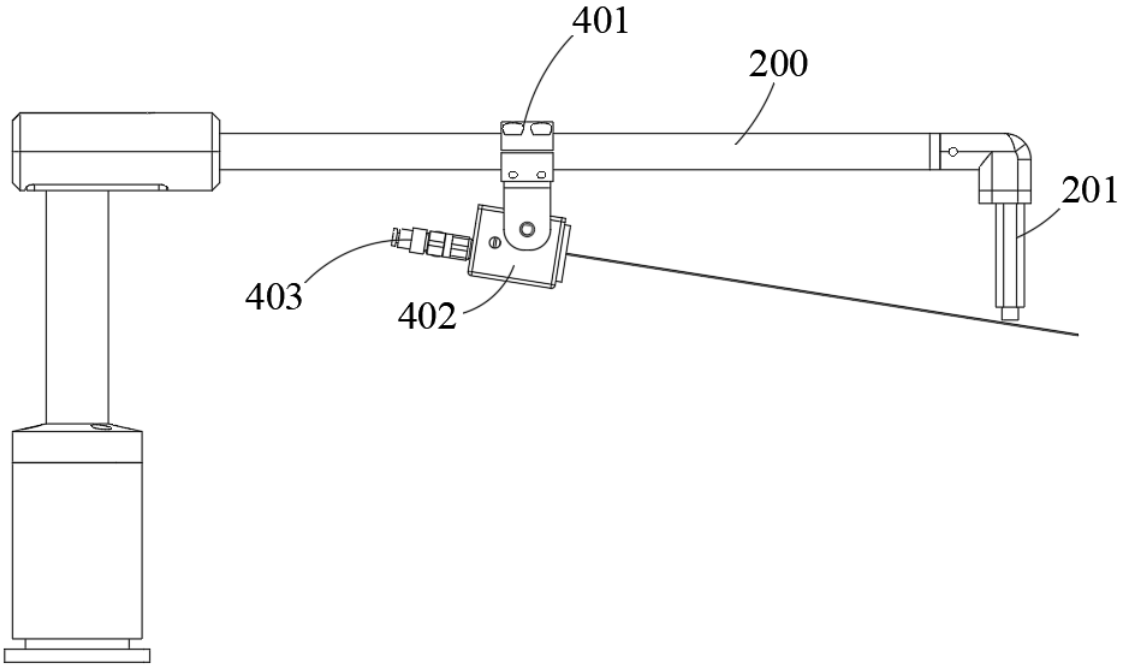

Fig.3

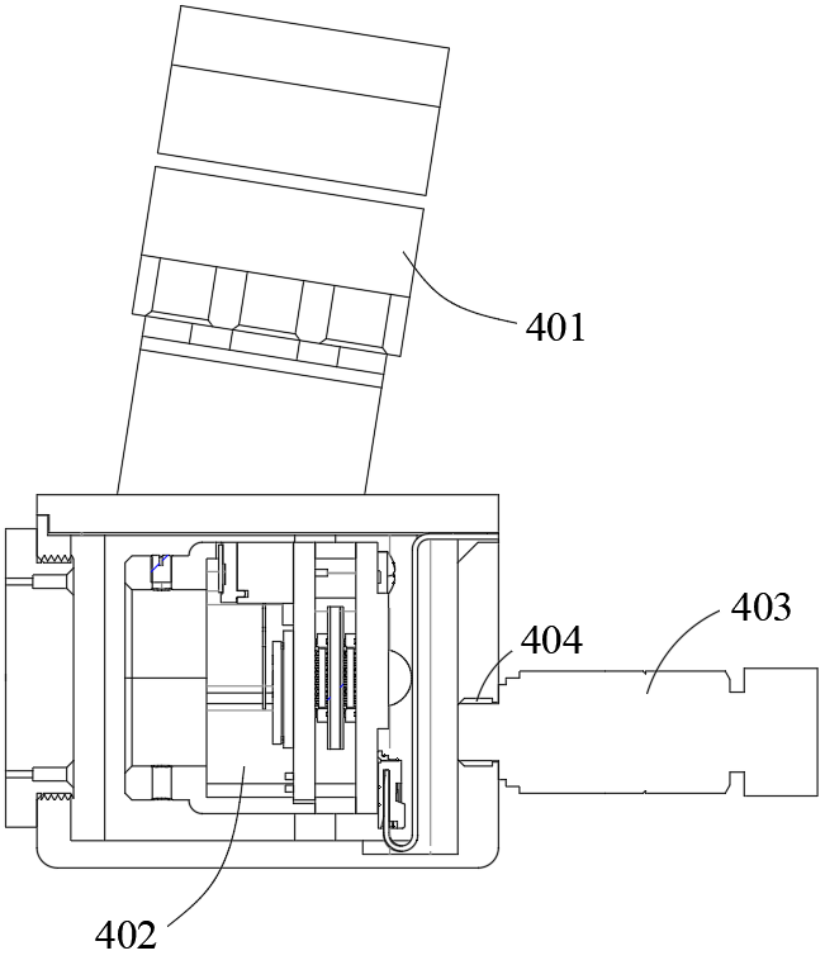

Fig.4

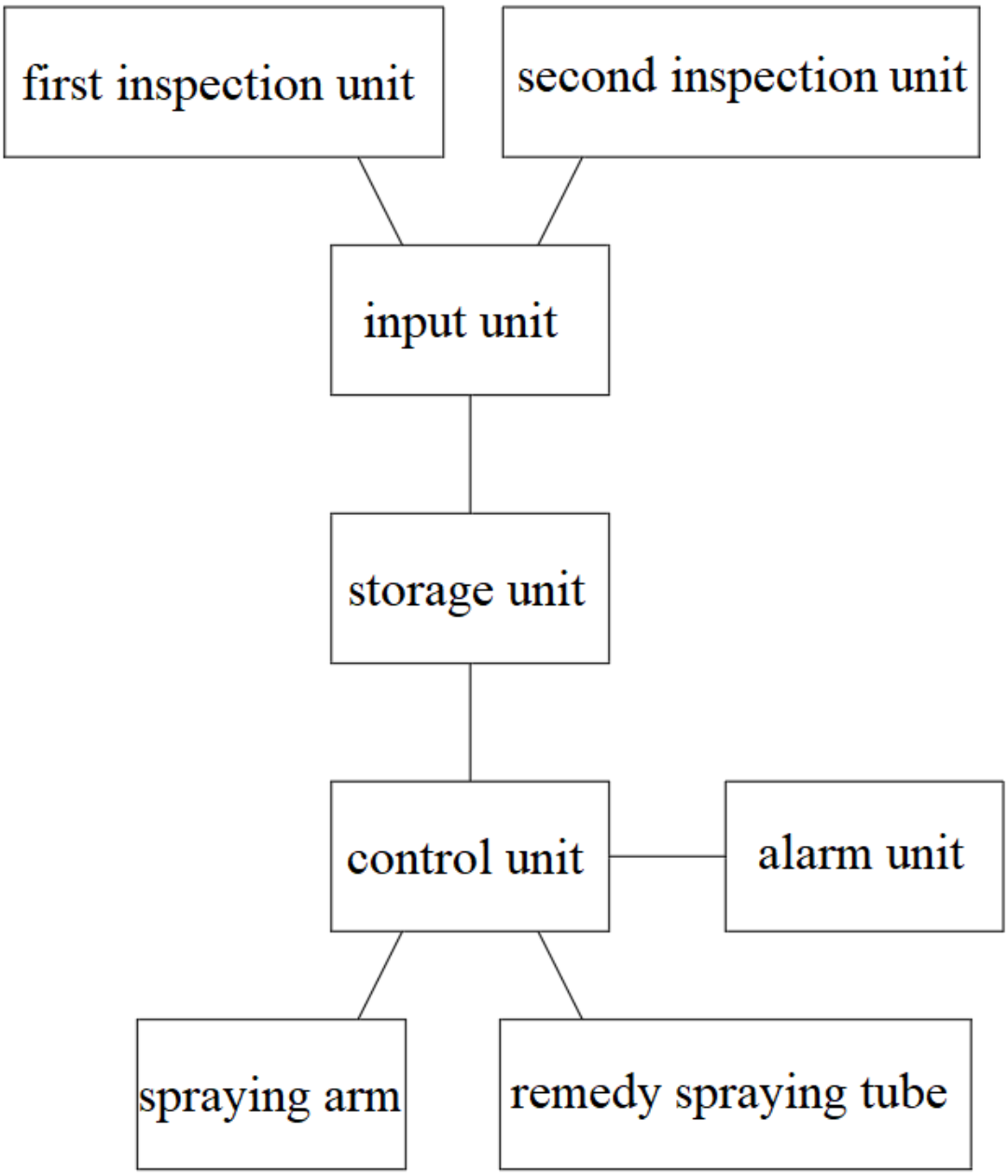
first inspection unit
second inspection unit
input unit
storage unit
control unit
alarm unit
spraying arm
remedy spraying tube

Fig.5