[図1]

(a)

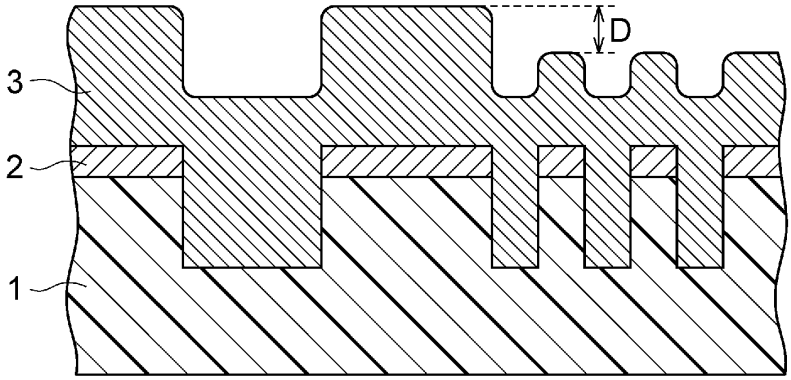

(b)

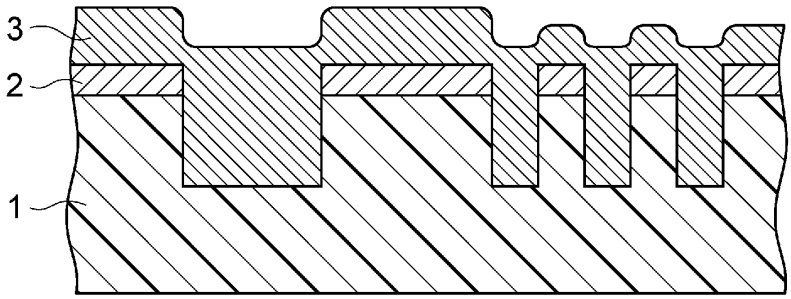

(c)

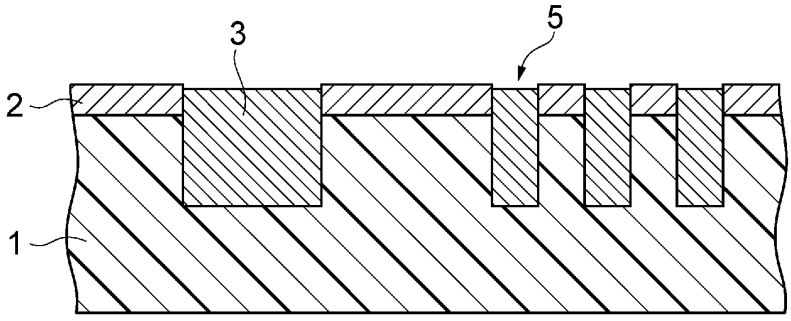

[図2]

(a)

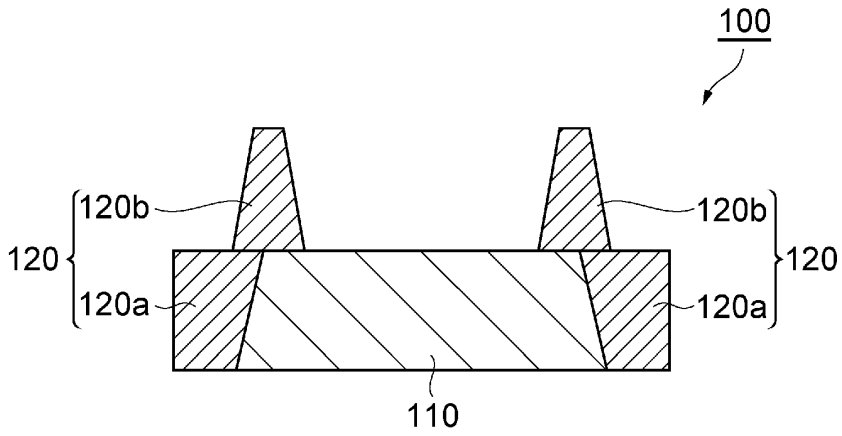

(b)

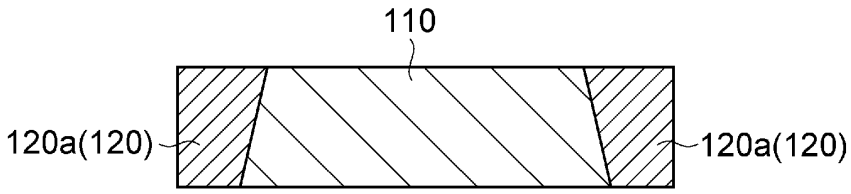

[図3]

(a)

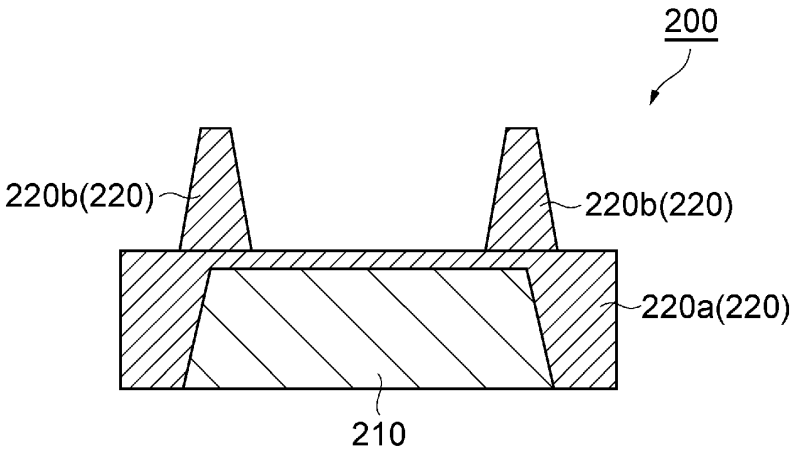

(b)

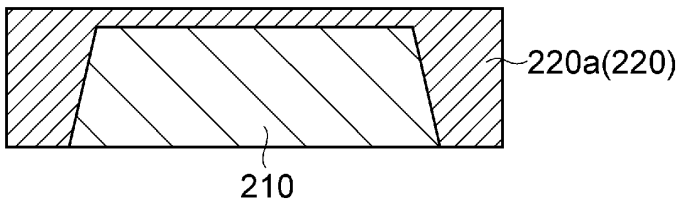

[図4]

(a)

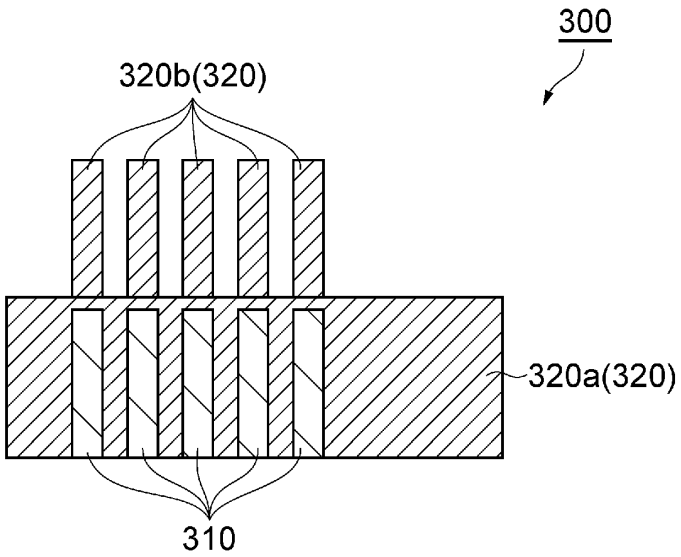

(b)

