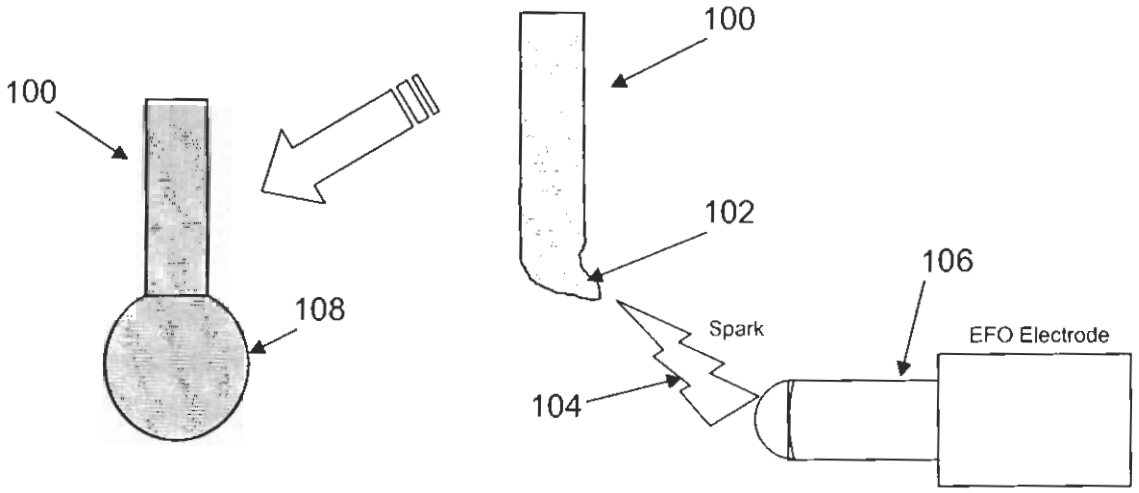

FIG. 1 (Prior Art)

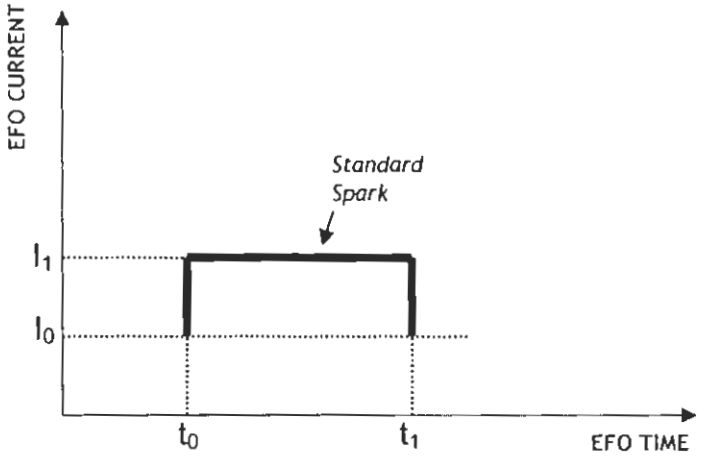

FIG. 2 (Prior Art)

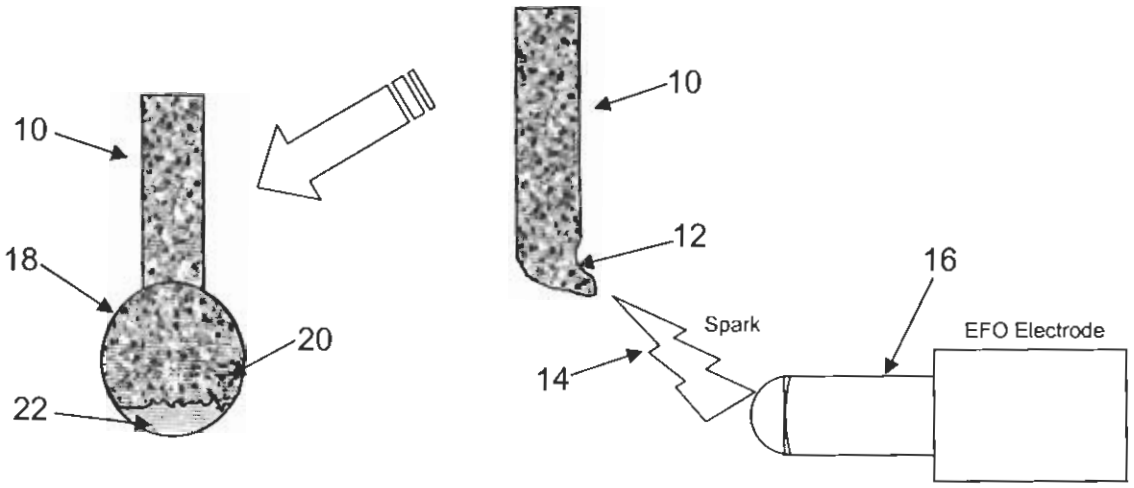

FIG. 3 (Prior Art)

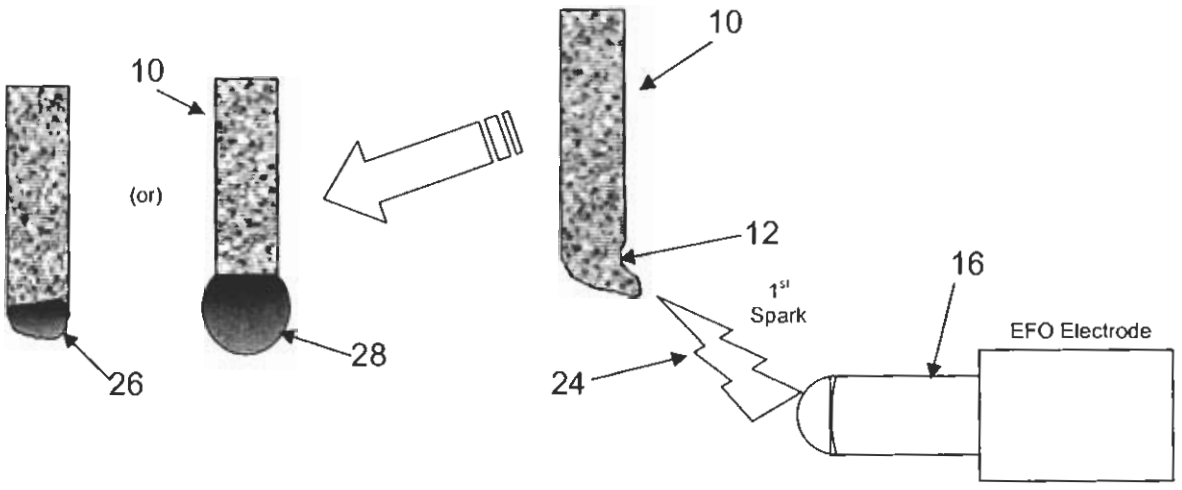

FIG. 4

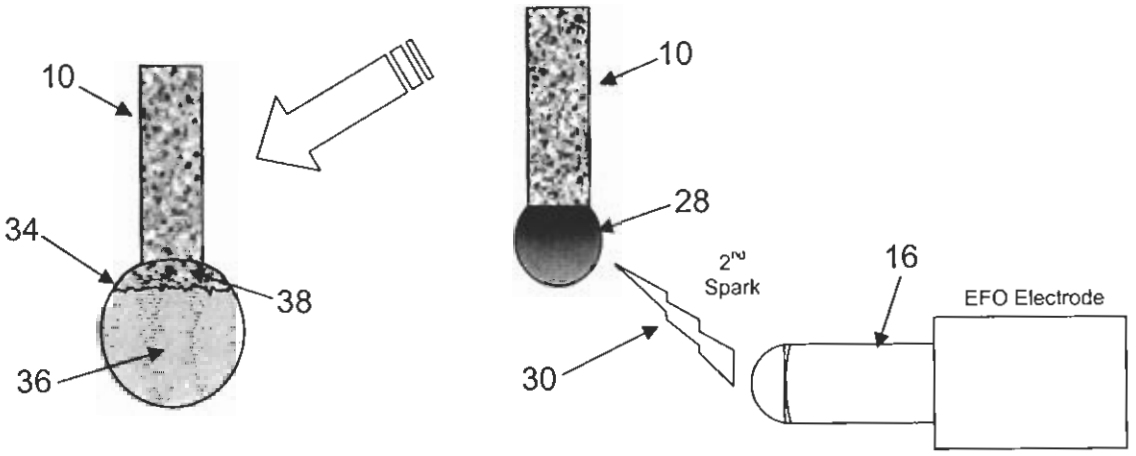
10
34
38
36
10
28
2nd
Spark
16
EFO Electrode
30

FIG. 5

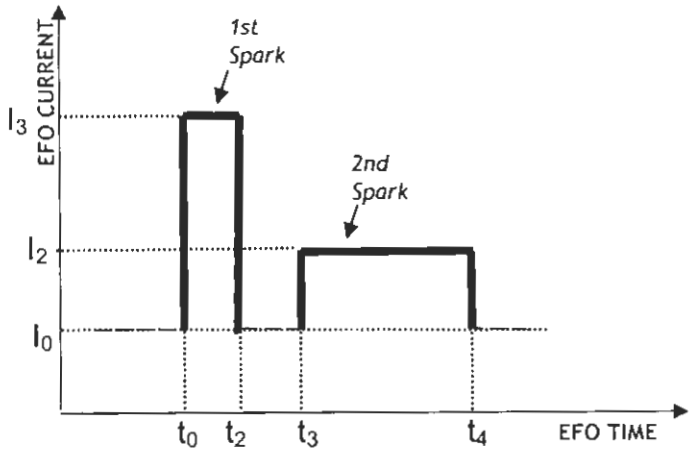
EFO CURRENT
1st
Spark
2nd
Spark
I3
I2
I0
t0
t2
t3
t4
EFO TIME

FIG. 6