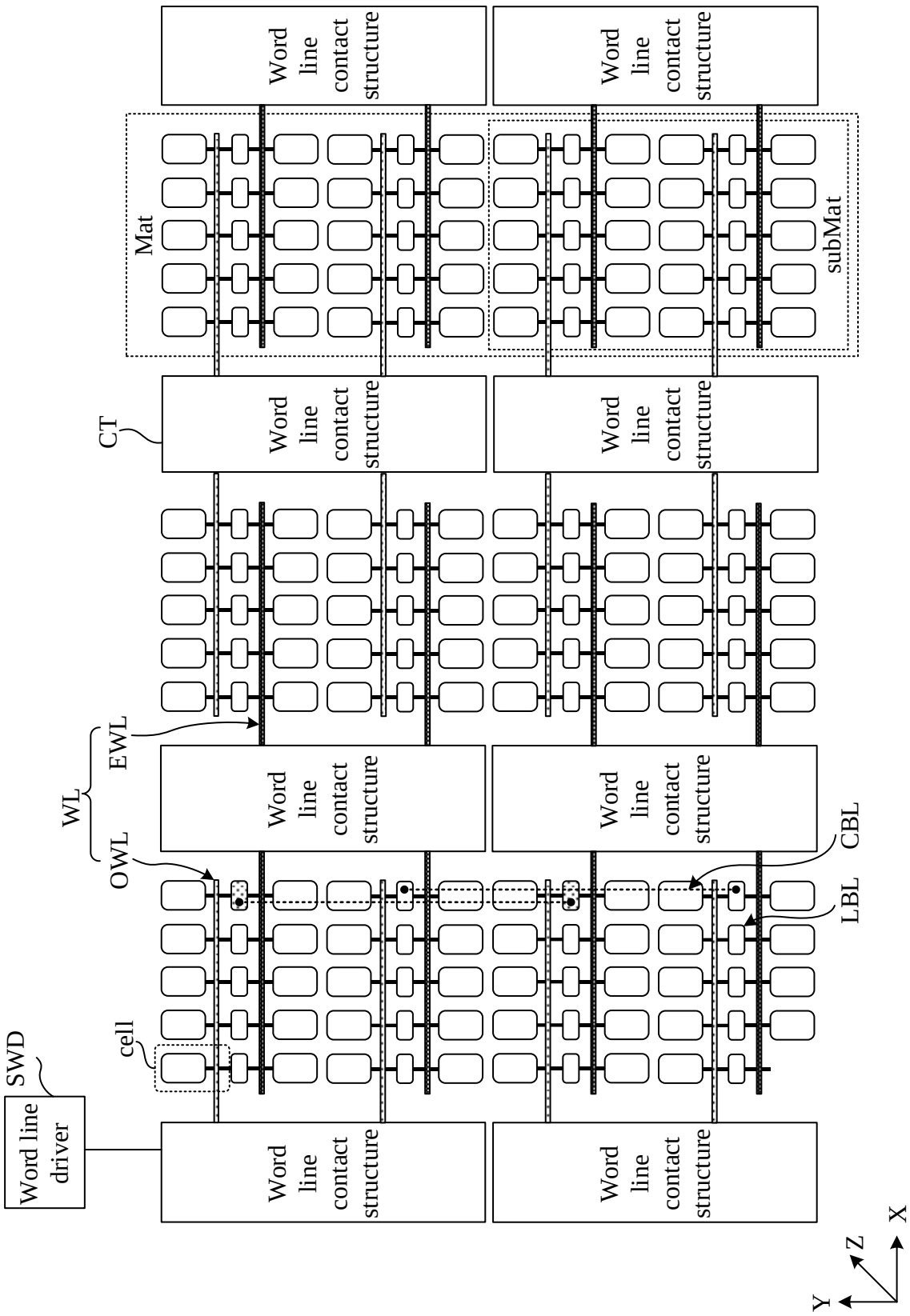
Word line driver
SWD
cell
WL
EWL
OWL
CT
Mat
subMat
Word line contact structure
CBL
LBL
Y
Z
X

FIG. 1

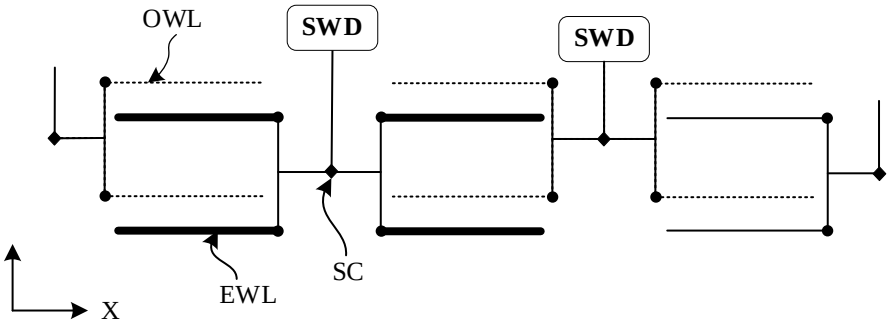

FIG. 2

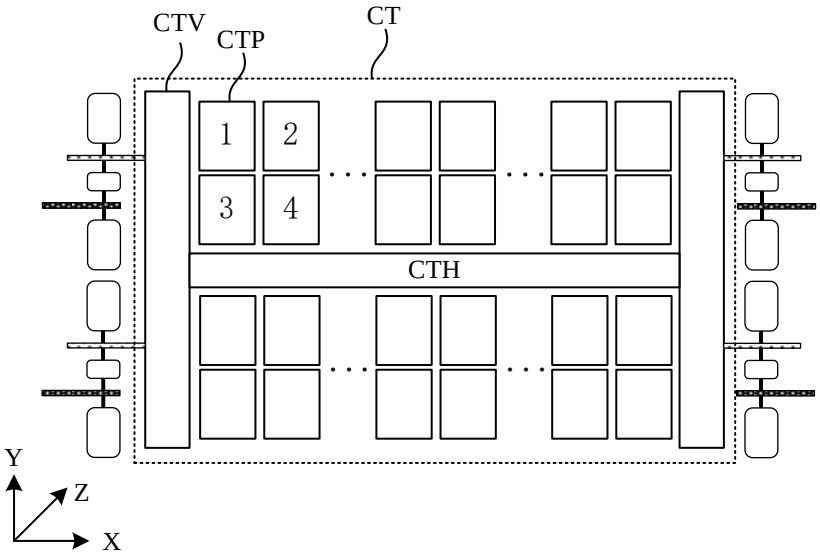

FIG. 3

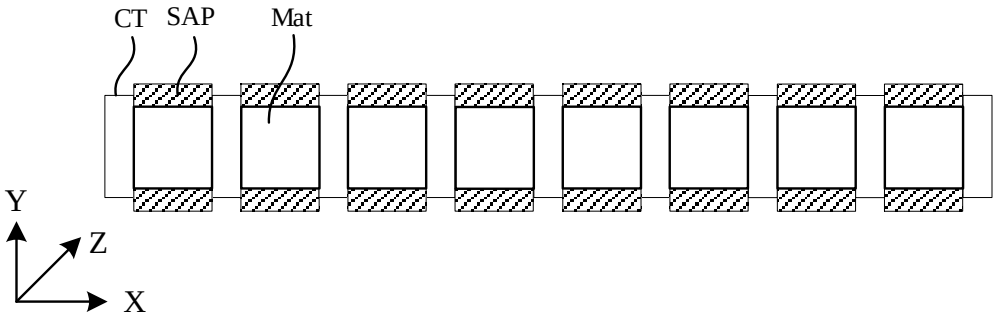

FIG. 4

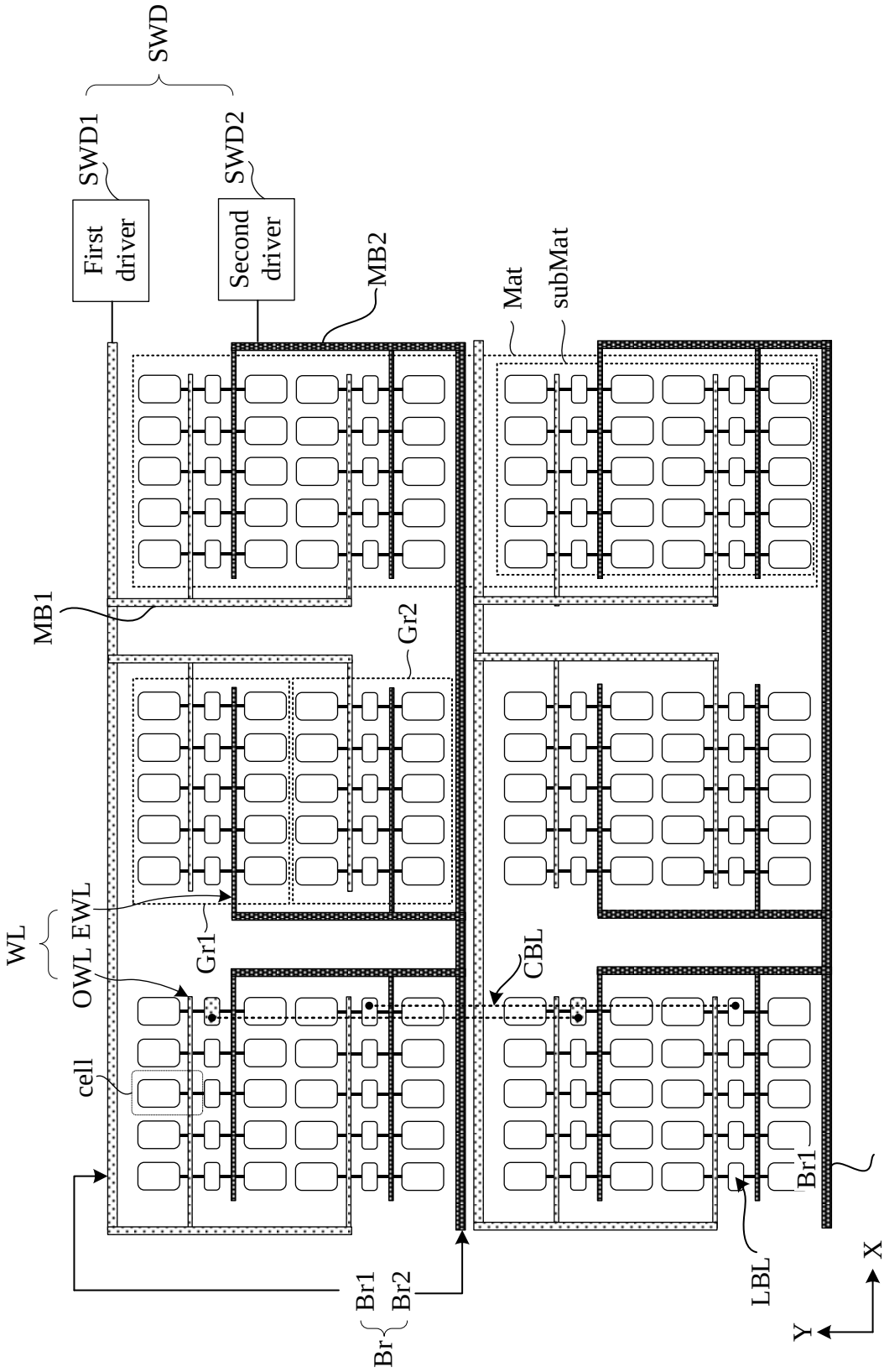
SWD
SWD1
SWD2
First driver
Second driver
MB2
Mat
subMat
MB1
Gr2
WL
OWL
EWL
Gr1
CBL
cell
Br1
Br2
Br
LBL
Br1
Y
X

FIG. 5

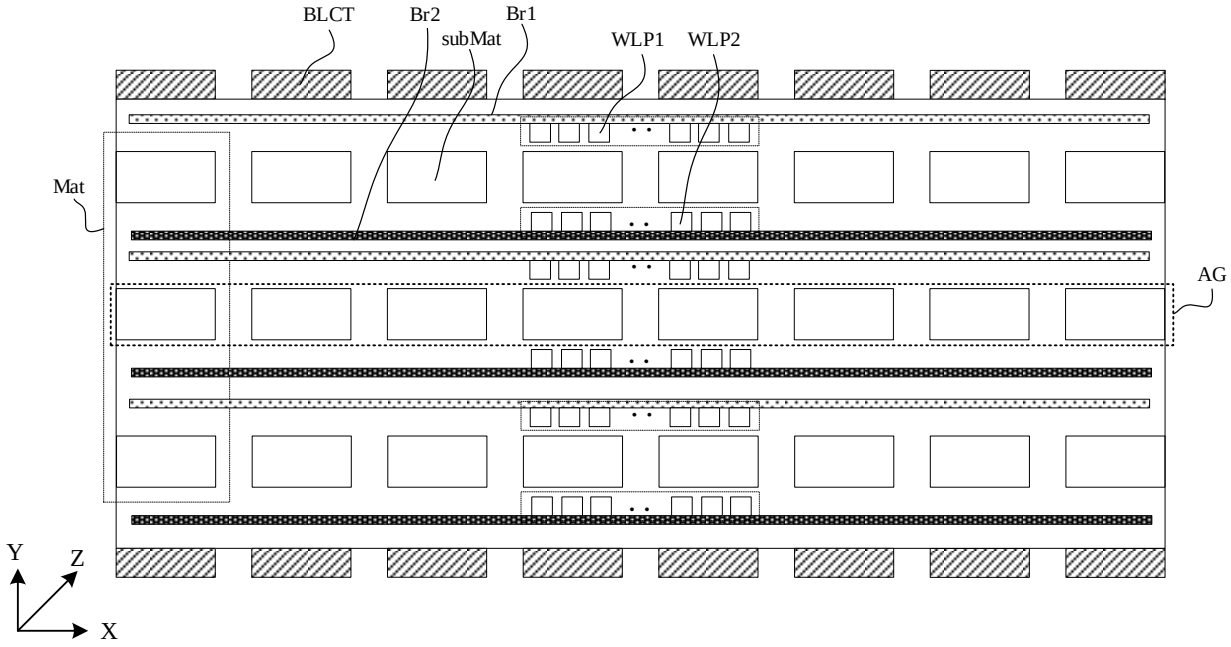

FIG. 6

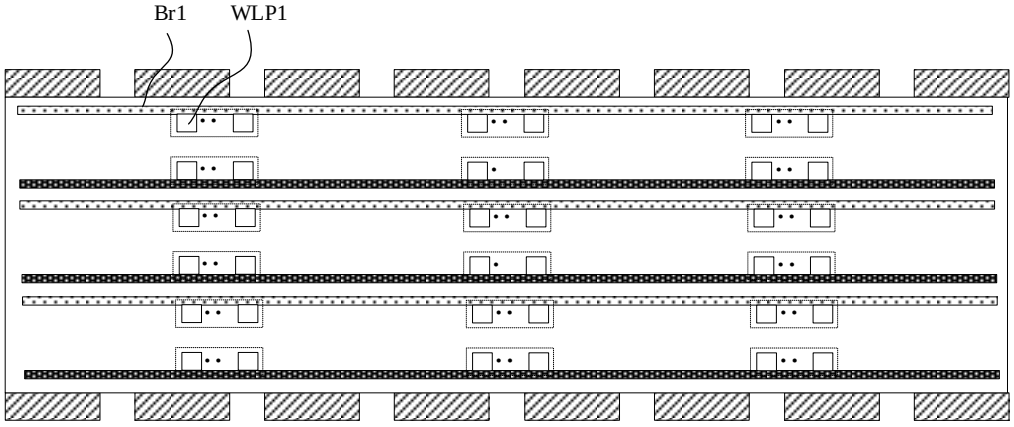

FIG. 7

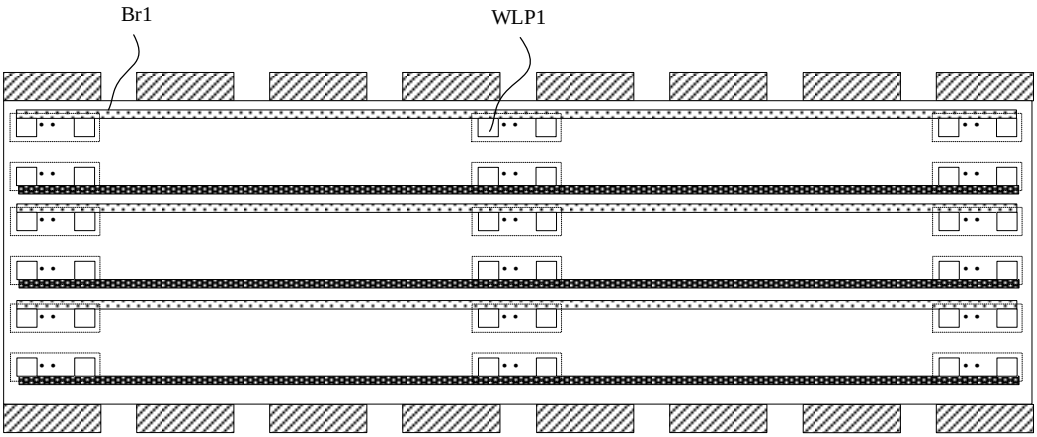

FIG. 8

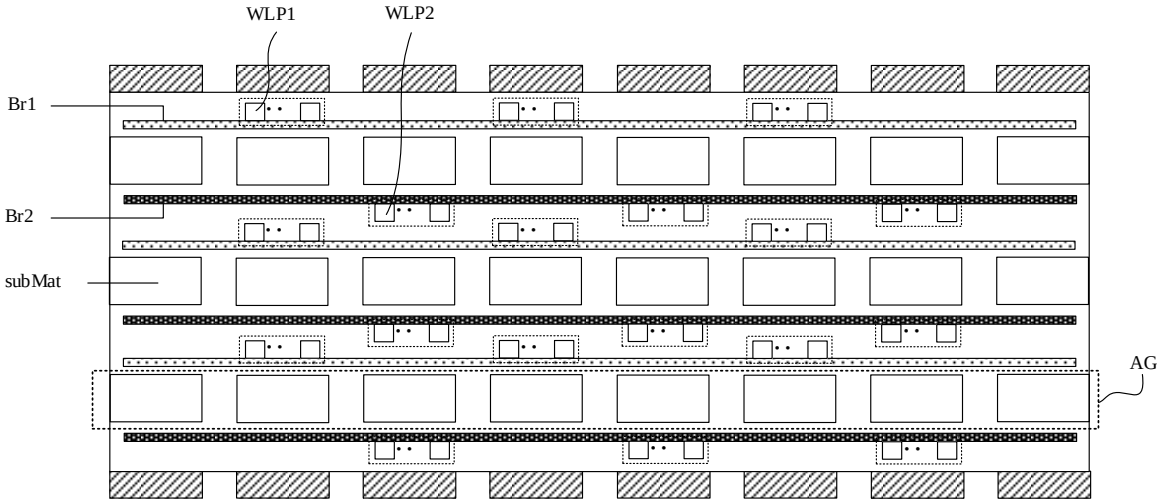

FIG. 9

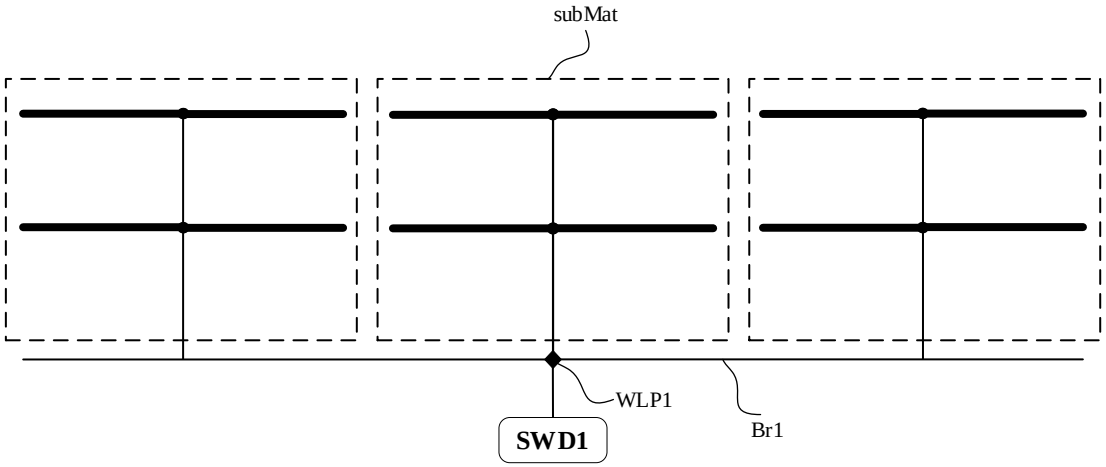

FIG. 10

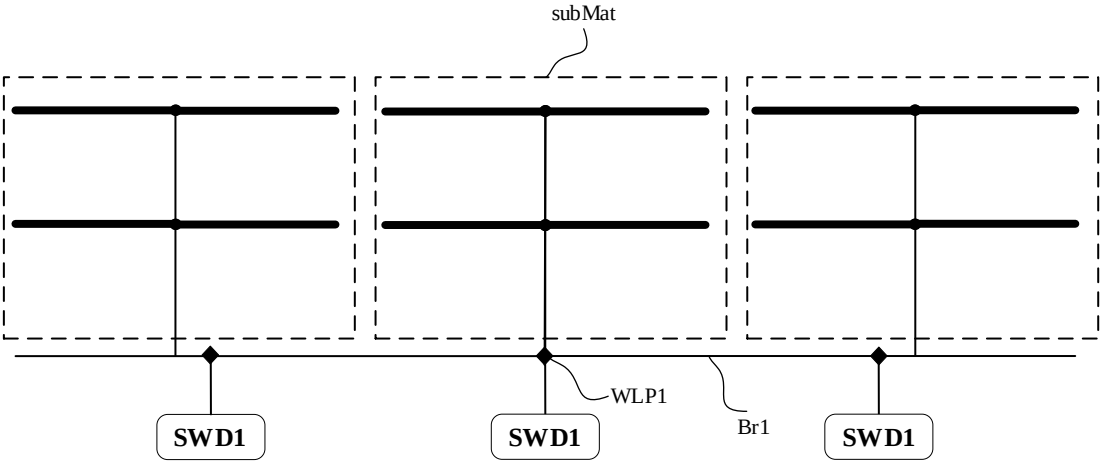
subMat
WLP1
Br1
SWD1
SWD1
SWD1

FIG. 11

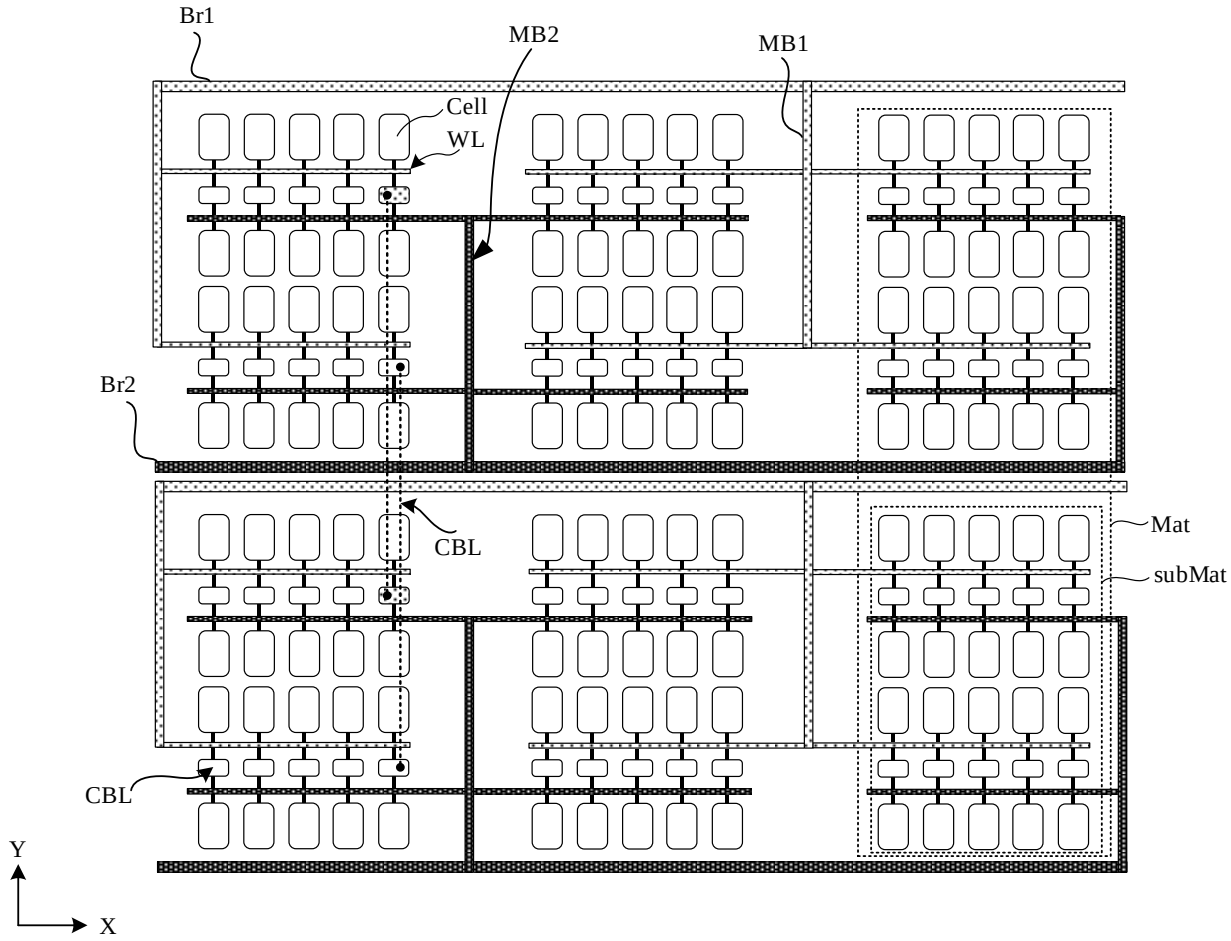
Br1
MB2
MB1
Cell
WL
Br2
CBL
Mat
subMat
CBL
Y
X

FIG. 12