FIGURE 1

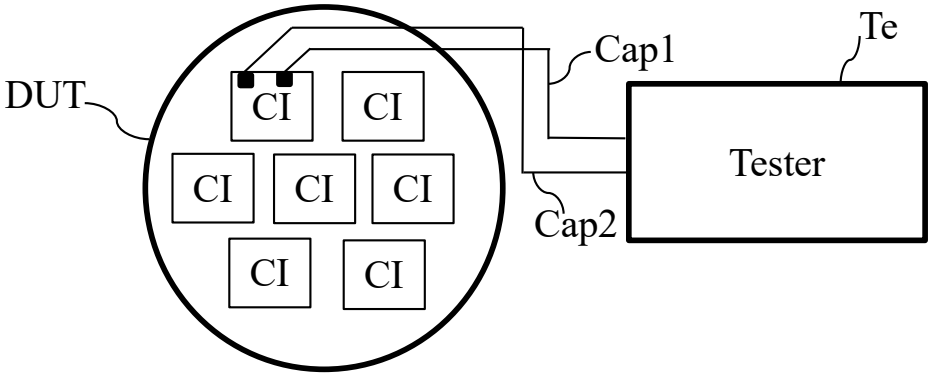

FIGURE 2

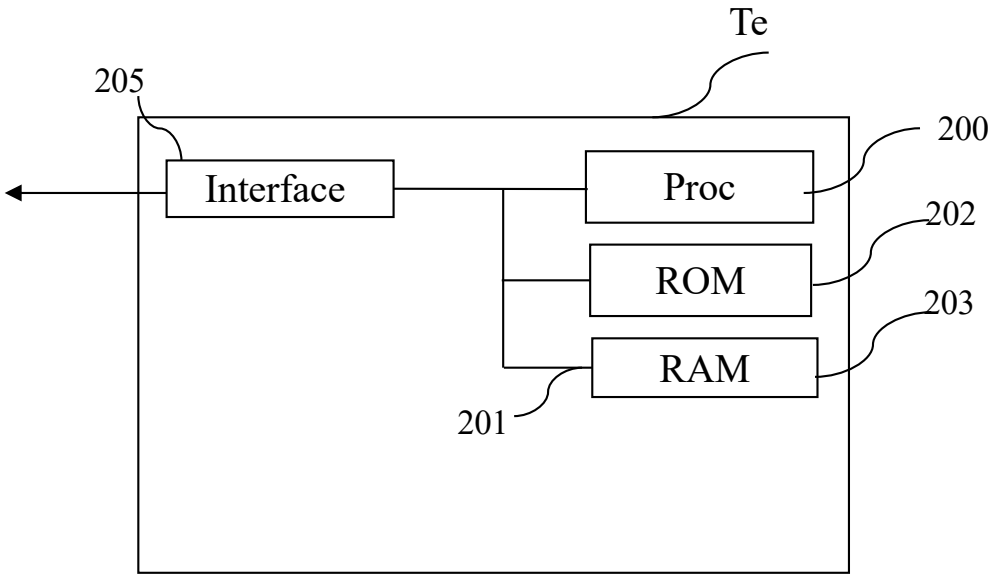

FIGURE 3

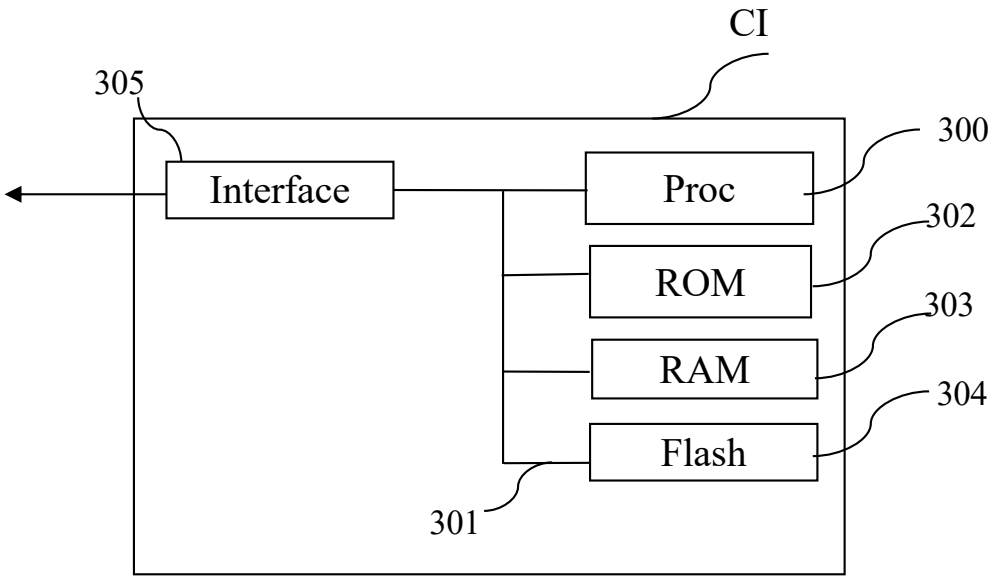

FIGURE 4

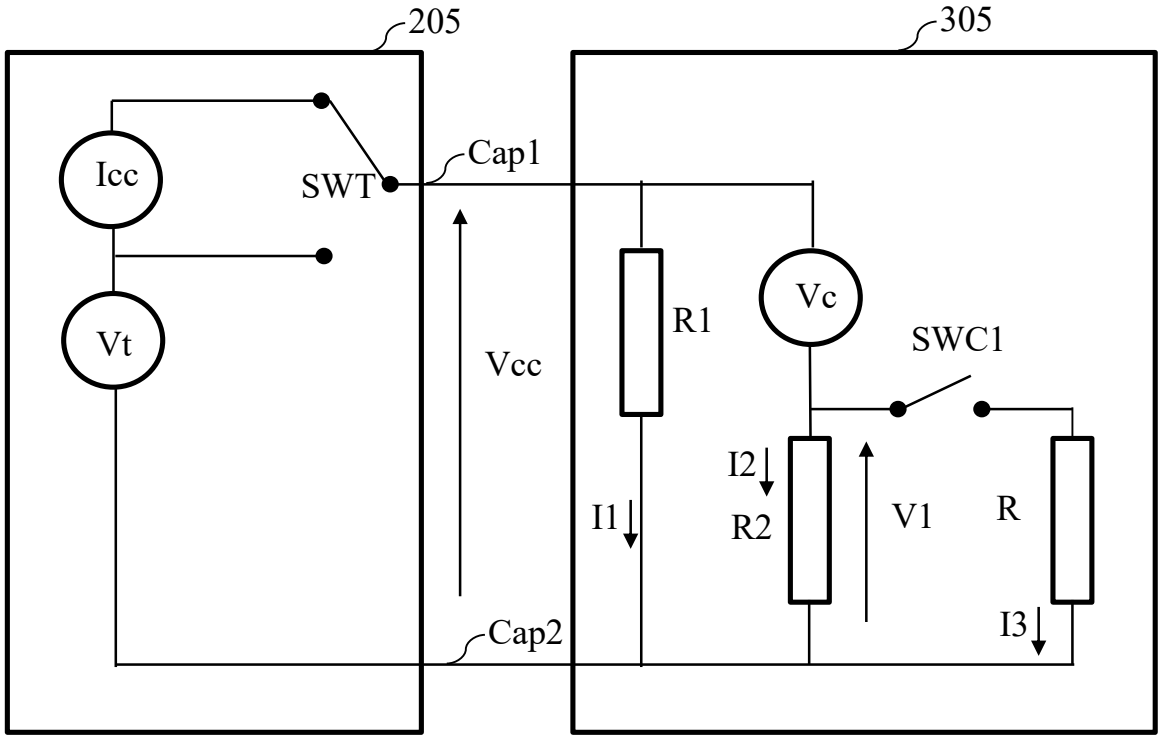

FIGURE 5

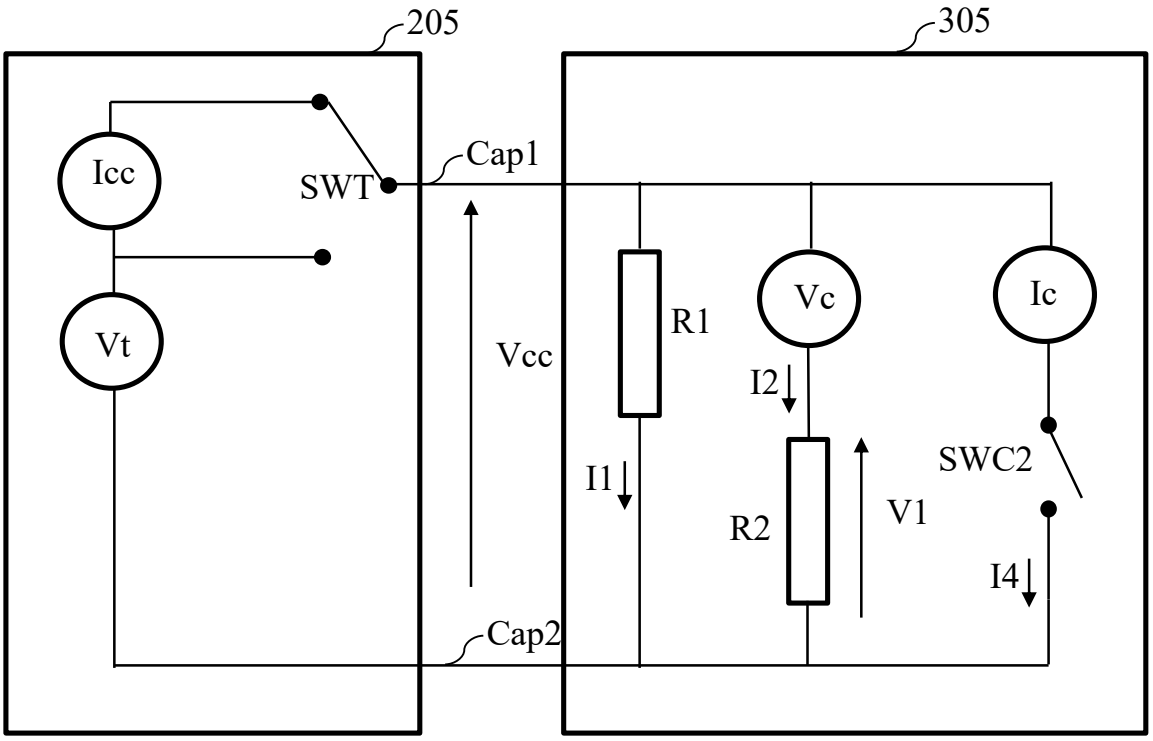

FIGURE 6

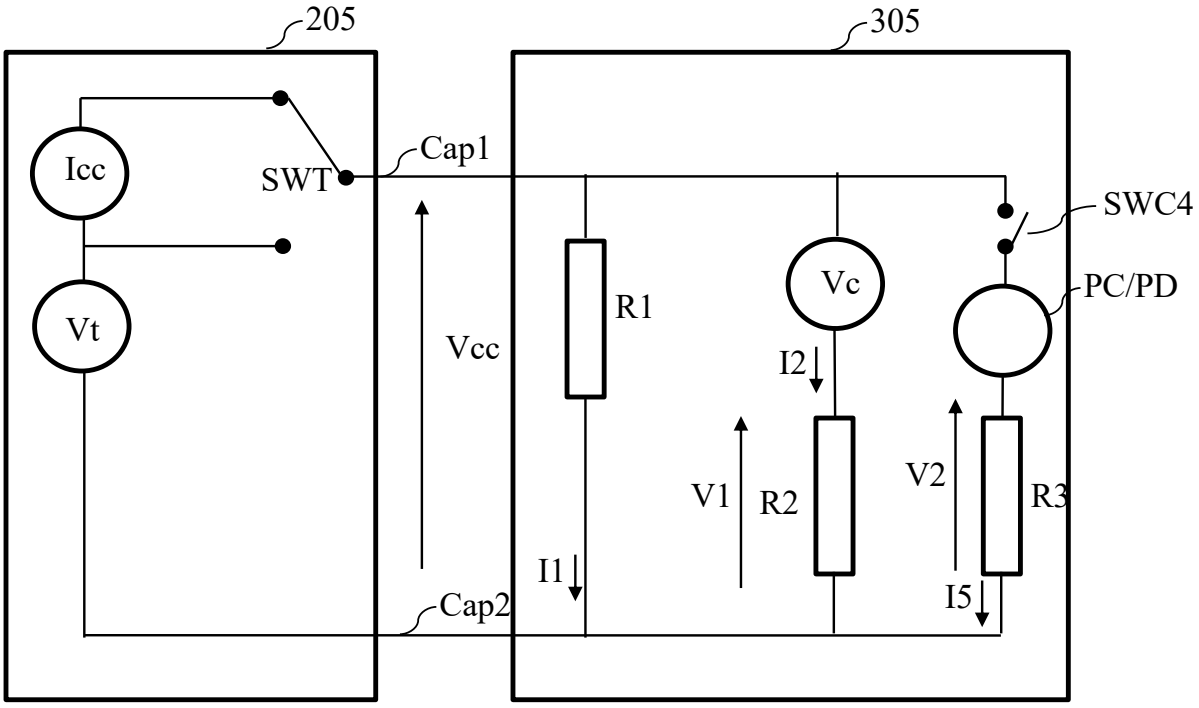
205
305
Icc
Vt
SWT
Cap1
Cap2
Vcc
R1
I1
Vc
I2
V1
R2
SWC4
PC/PD
V2
R3
I5

FIGURE 7

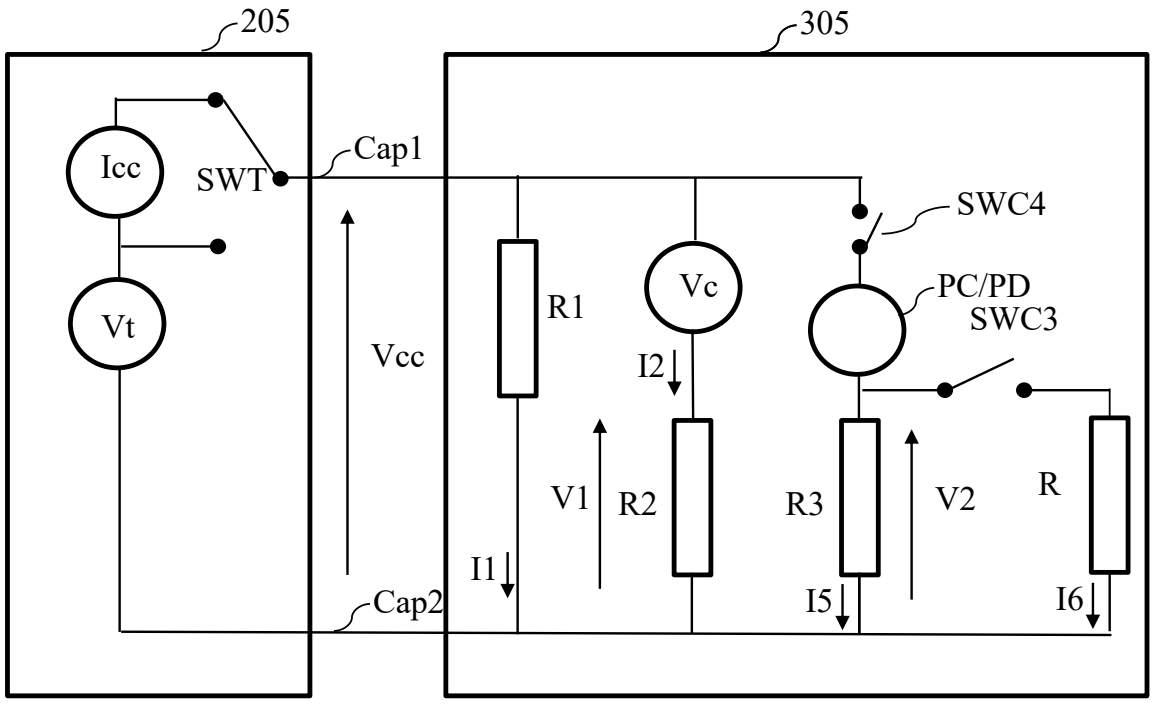
205
305
Icc
SWT
Cap1
SWC4
Vt
Vcc
R1
Vc
PC/PD
SWC3
I2
V1
R2
R3
V2
R
I1
Cap2
I5
I6

FIGURE 8A

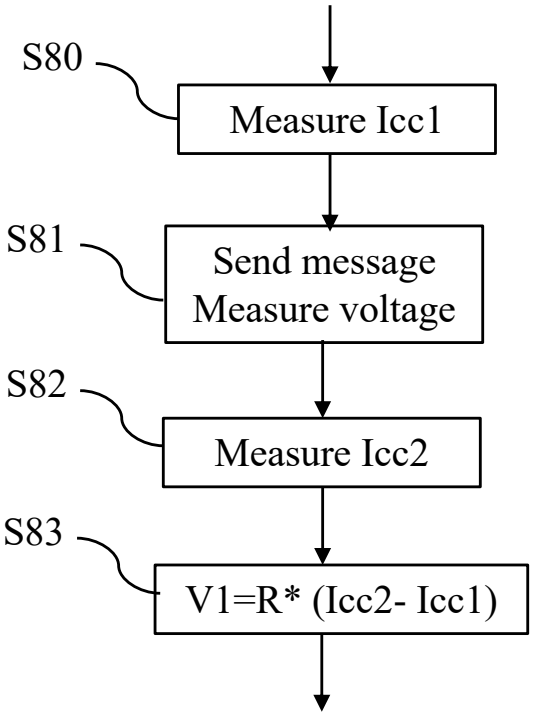

FIGURE 8B

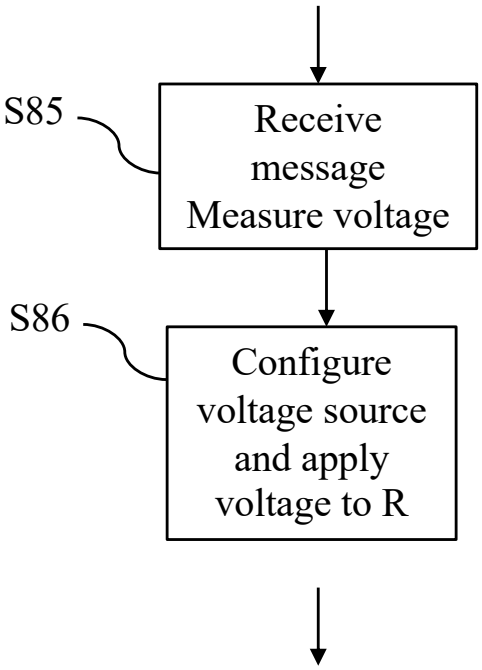

5

FIGURE 9A

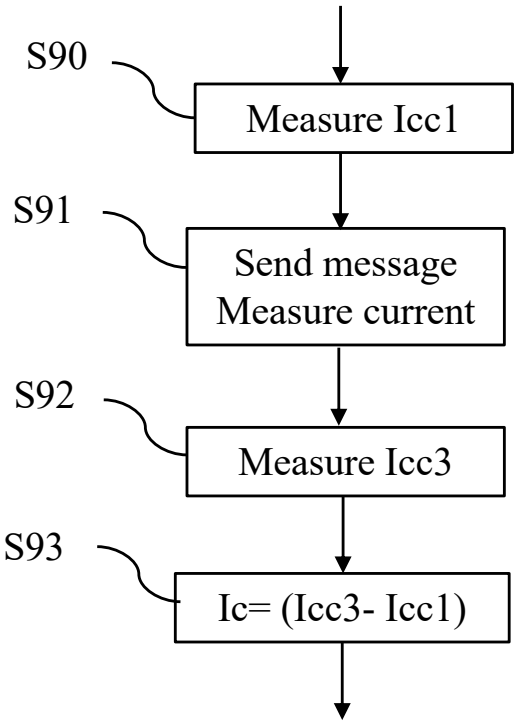

FIGURE 9B

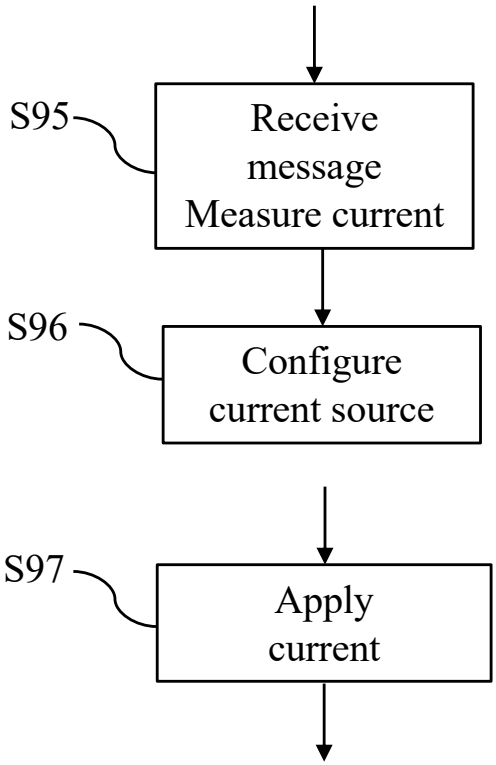

FIGURE 10A

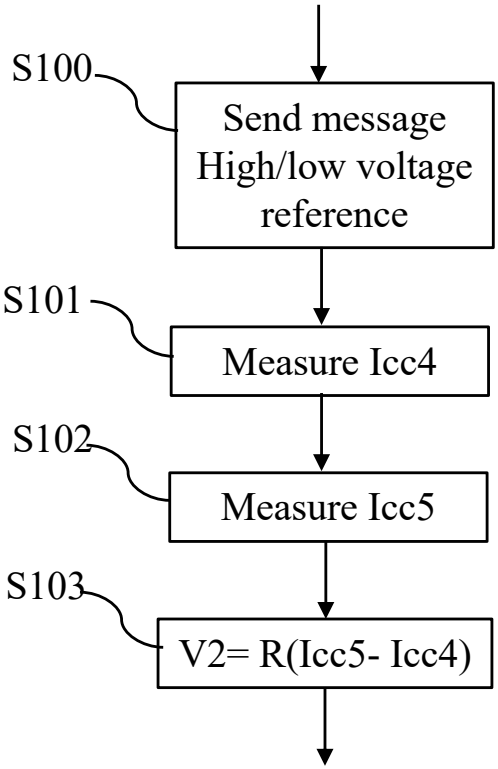

FIGURE 10B

