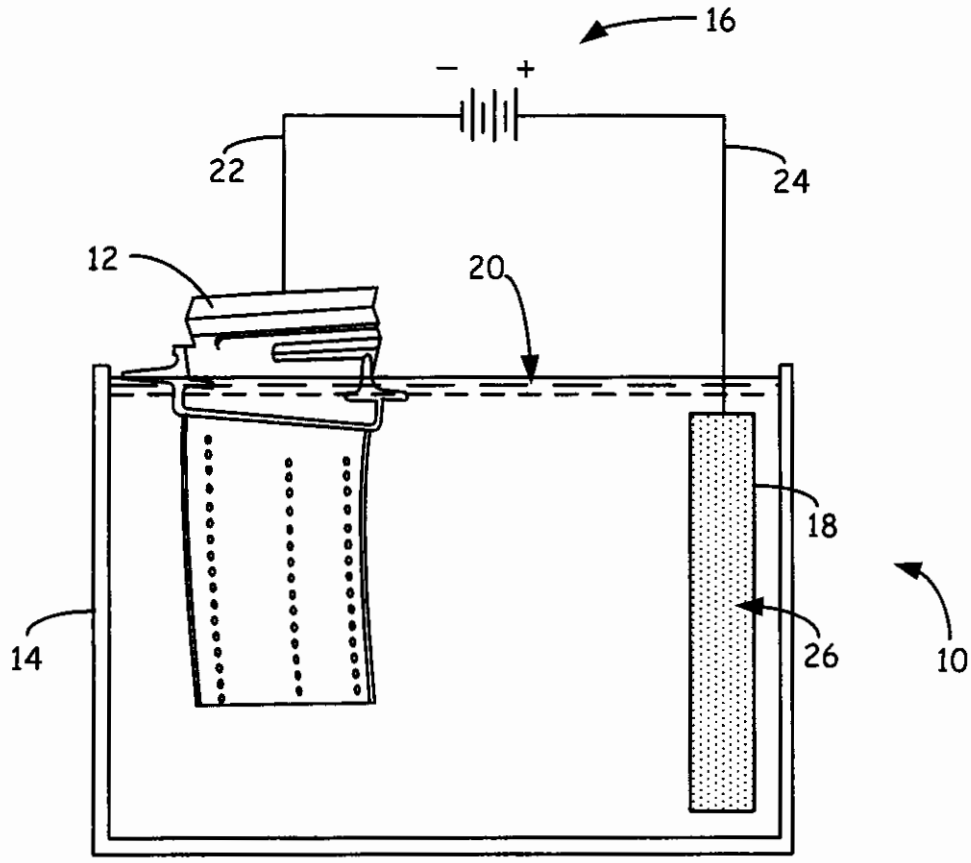

FIG. 1

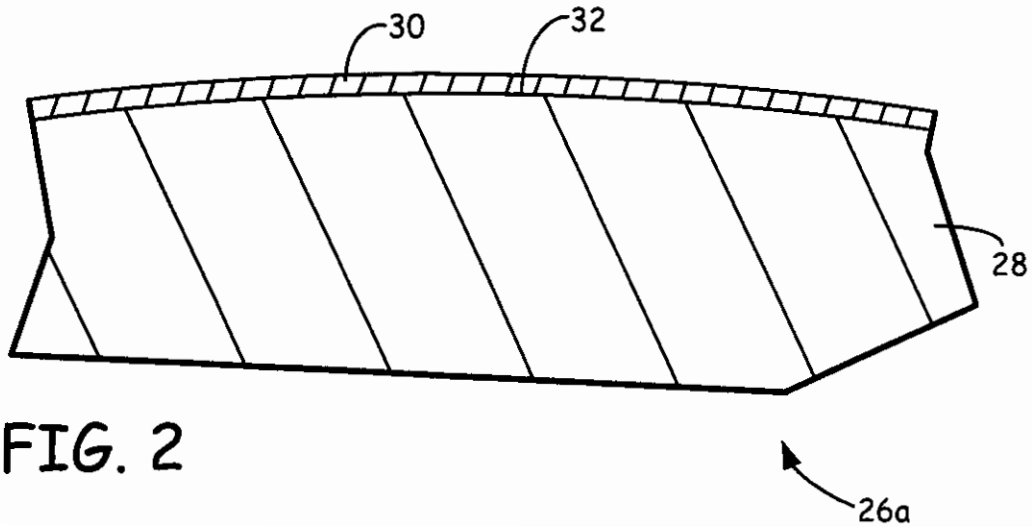

FIG. 2

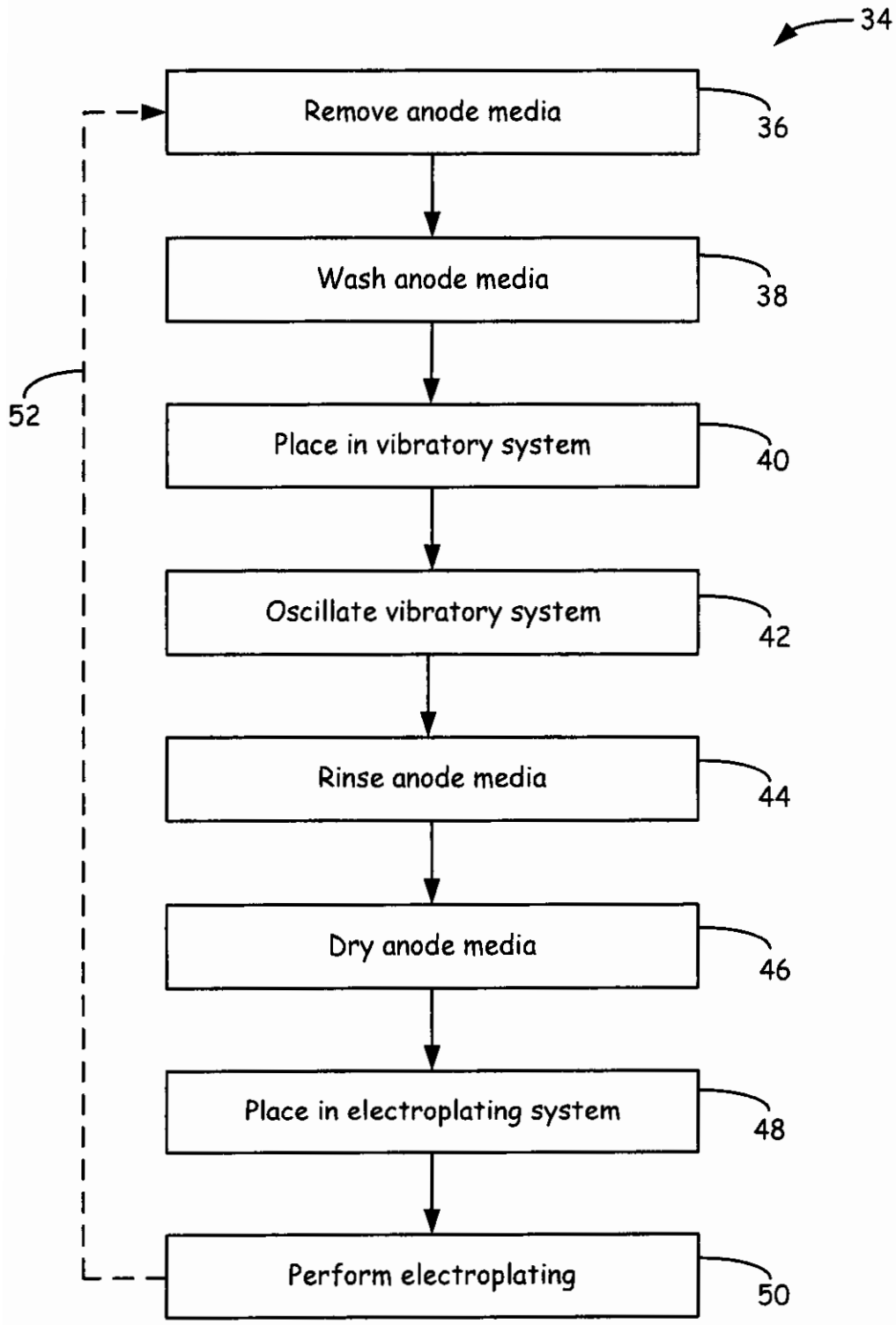
34
Remove anode media
36
Wash anode media
38
52
Place in vibratory system
40
Oscillate vibratory system
42
Rinse anode media
44
Dry anode media
46
Place in electroplating system
48
Perform electroplating
50