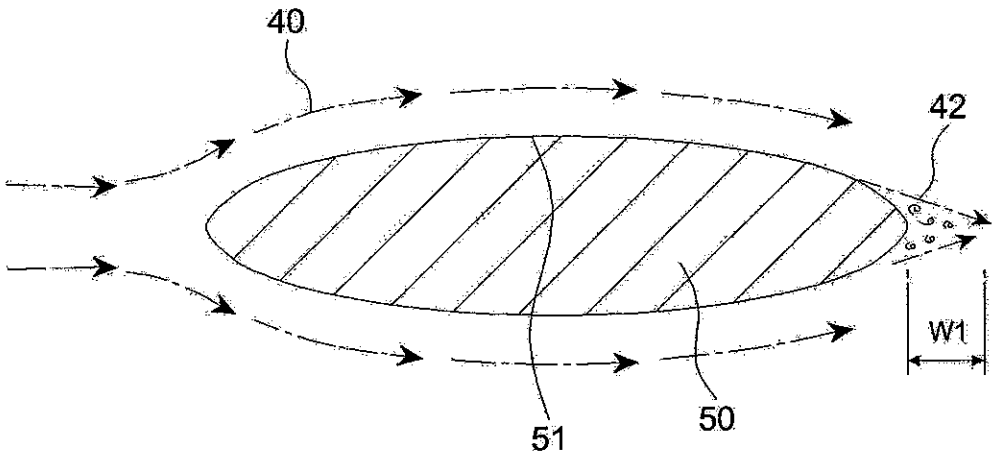

FIG.1
(PRIOR ART)

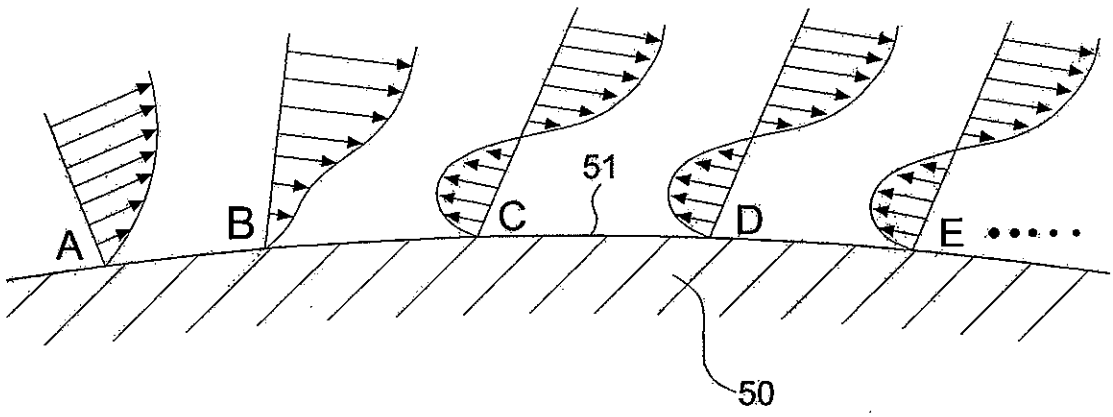

FIG.2
(PRIOR ART)

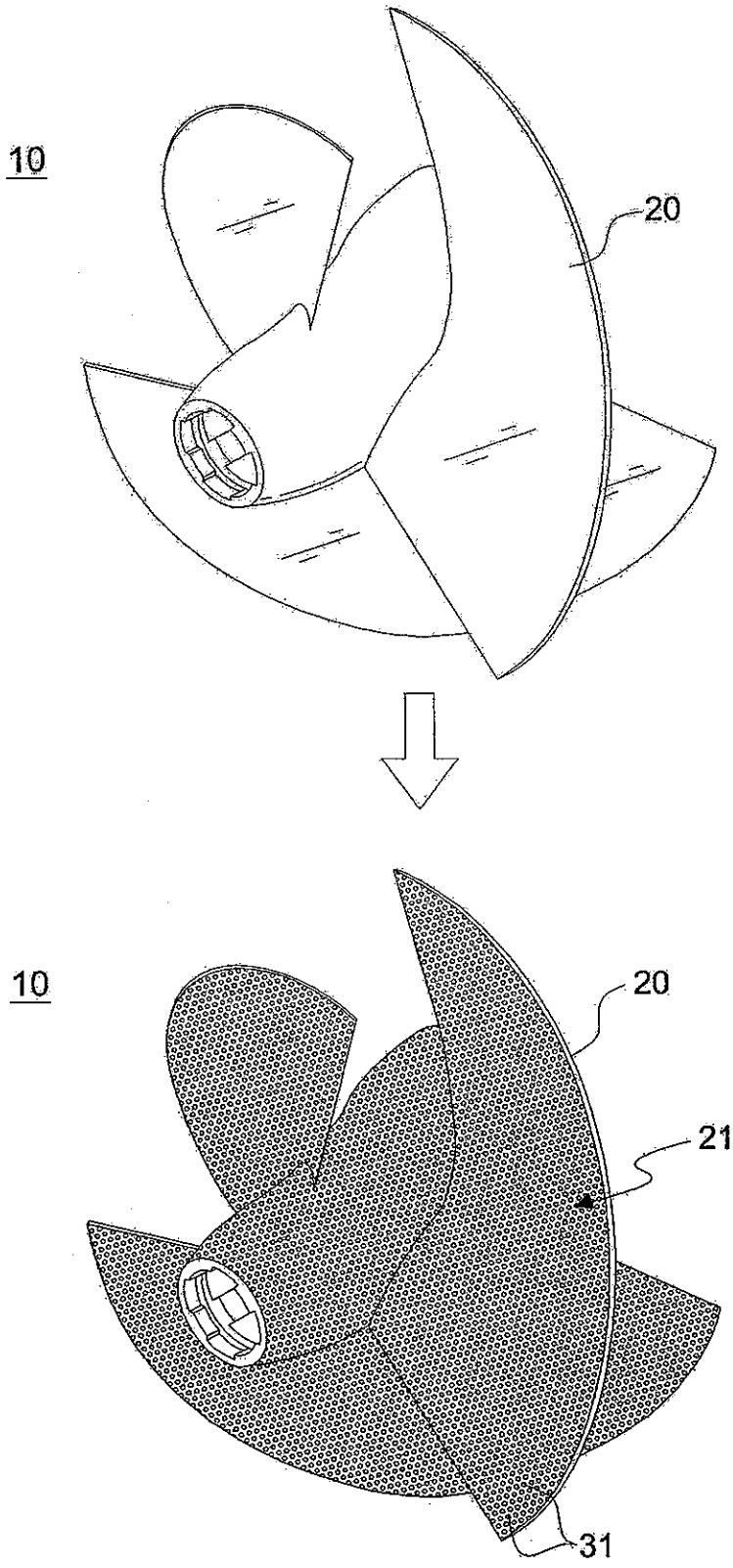

FIG.3

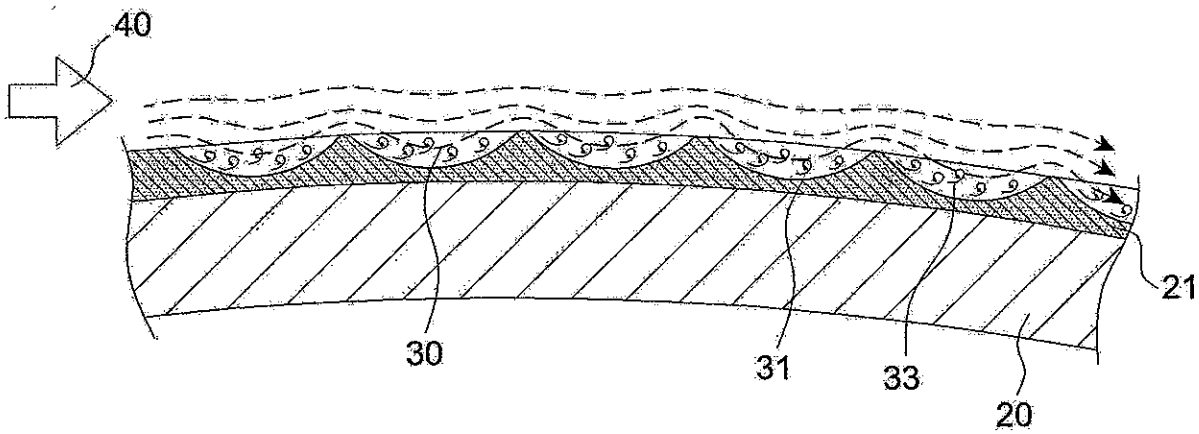

FIG.4

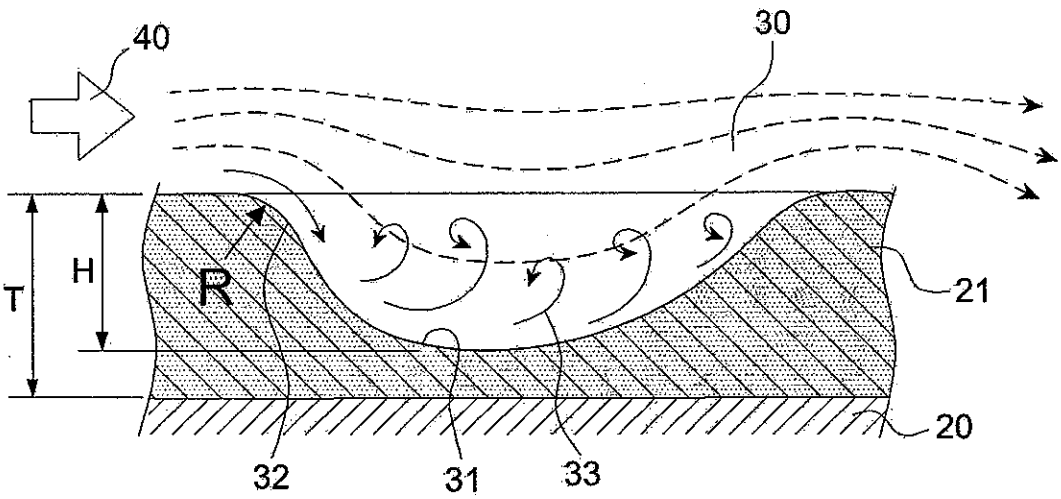

FIG.5

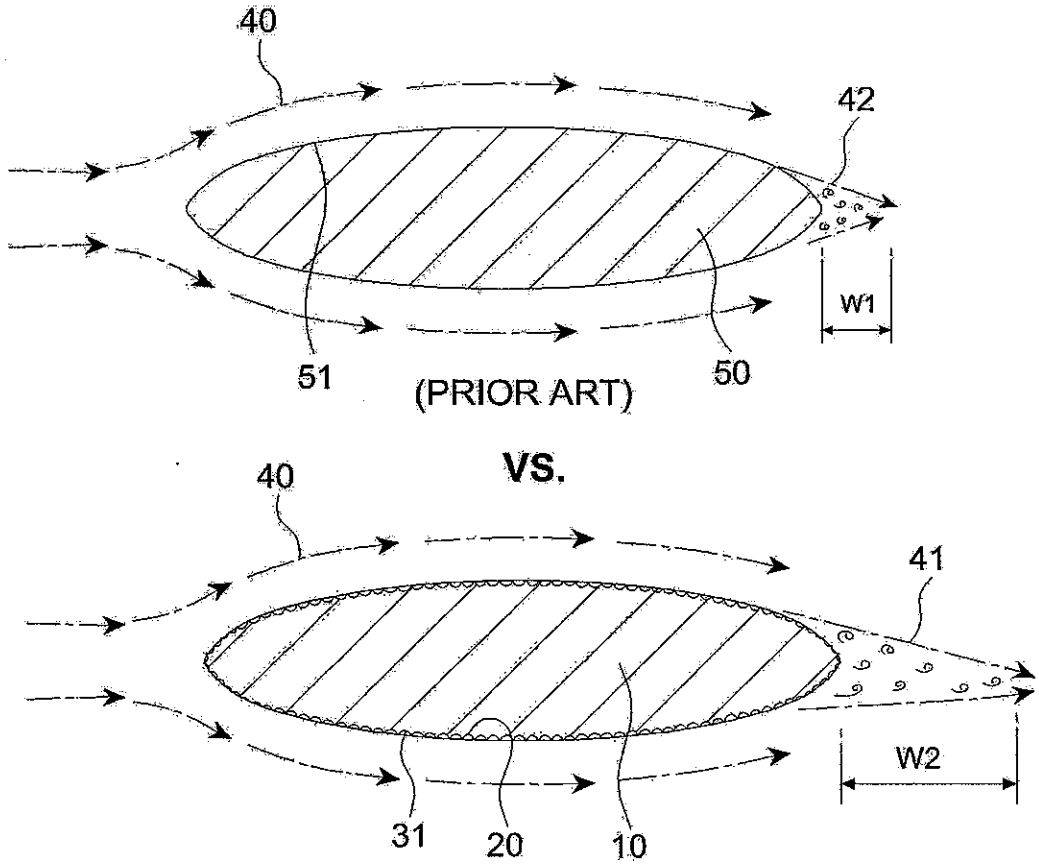
40
42
W1
51
50
(PRIOR ART)
VS.
40
41
W2
31
20
10

FIG.6

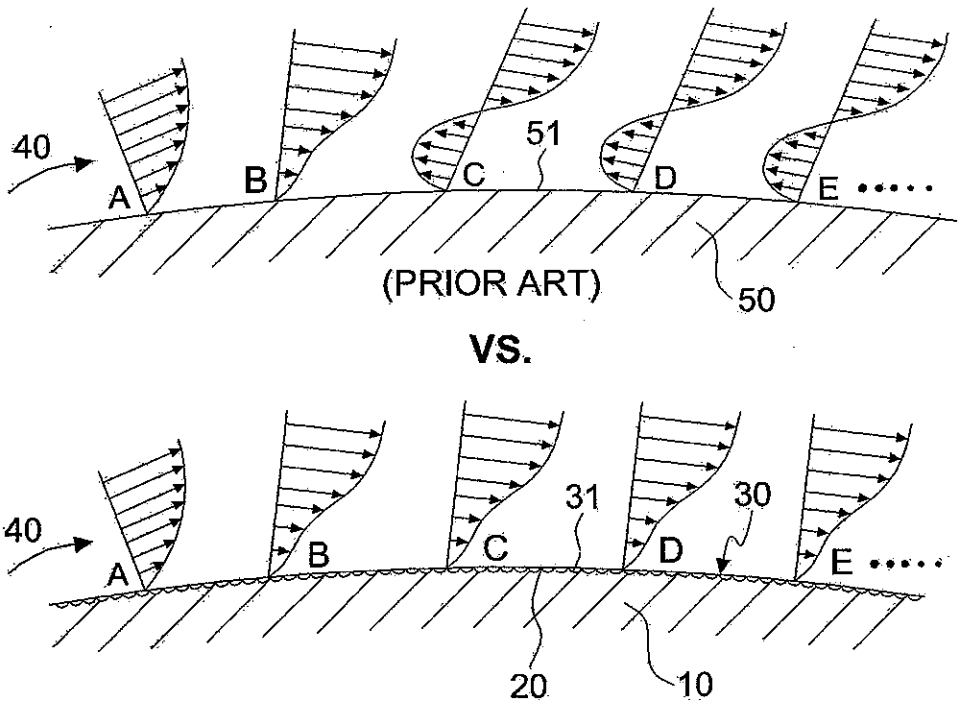
40
A
B
C
51
D
E
(PRIOR ART)
50
VS.
40
A
B
C
31
D
30
E
20
10

FIG.7

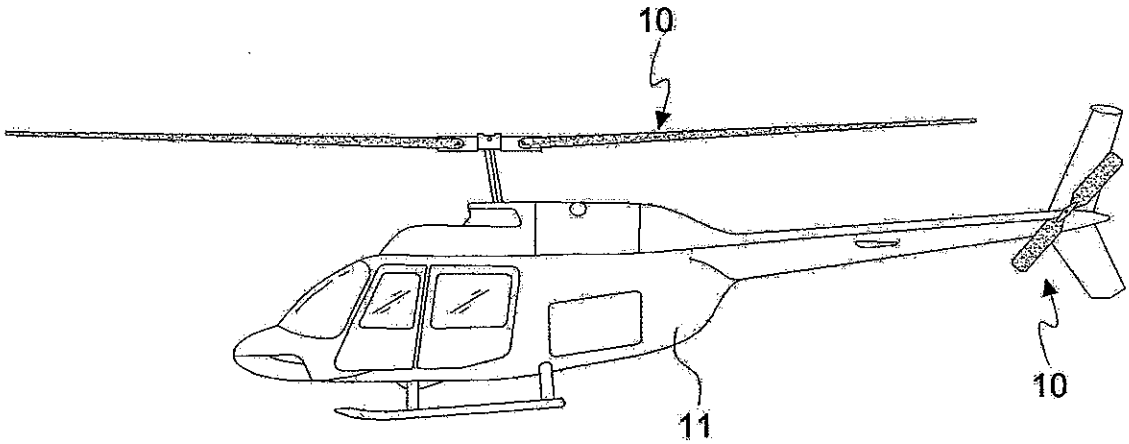

FIG.8A

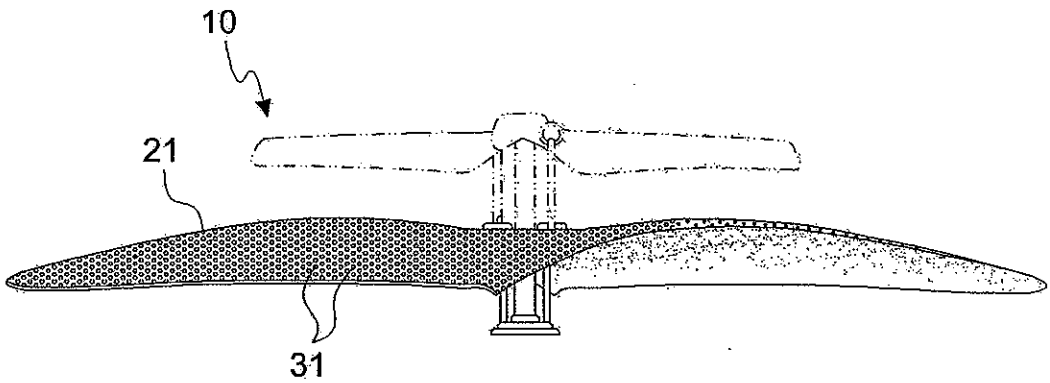

FIG.8B

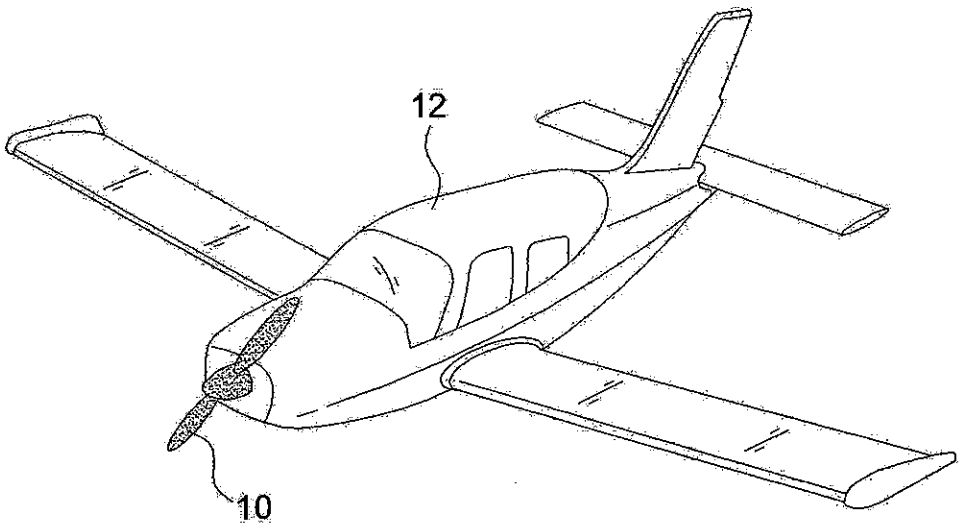

FIG.8C

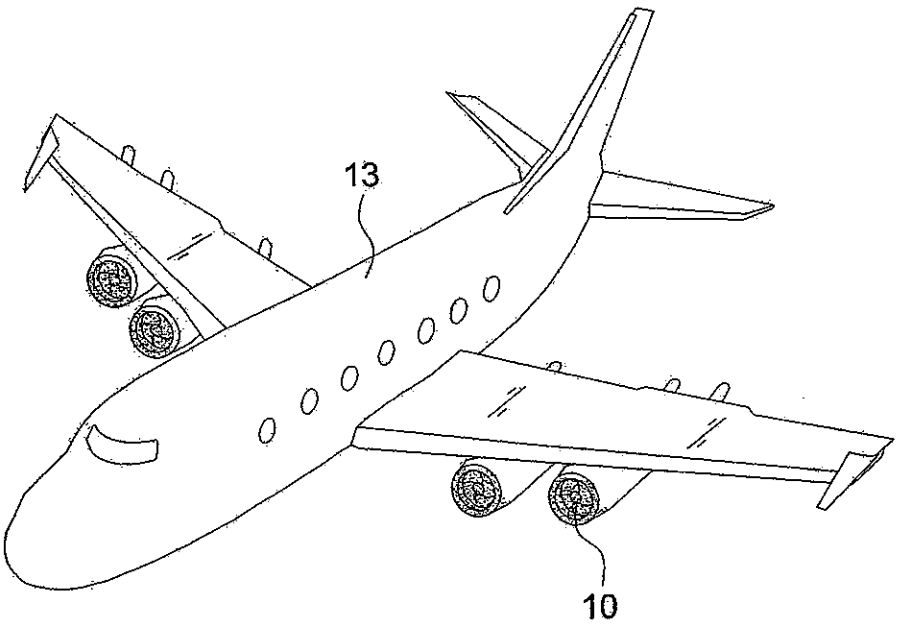

FIG.8D