Fig 1

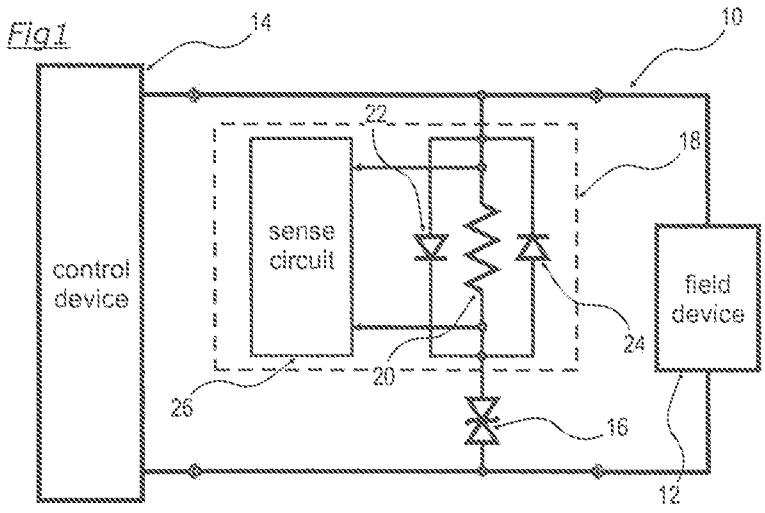
14
10
22
18
control device
sense circuit
field device
24
20
26
16
12

Fig2.

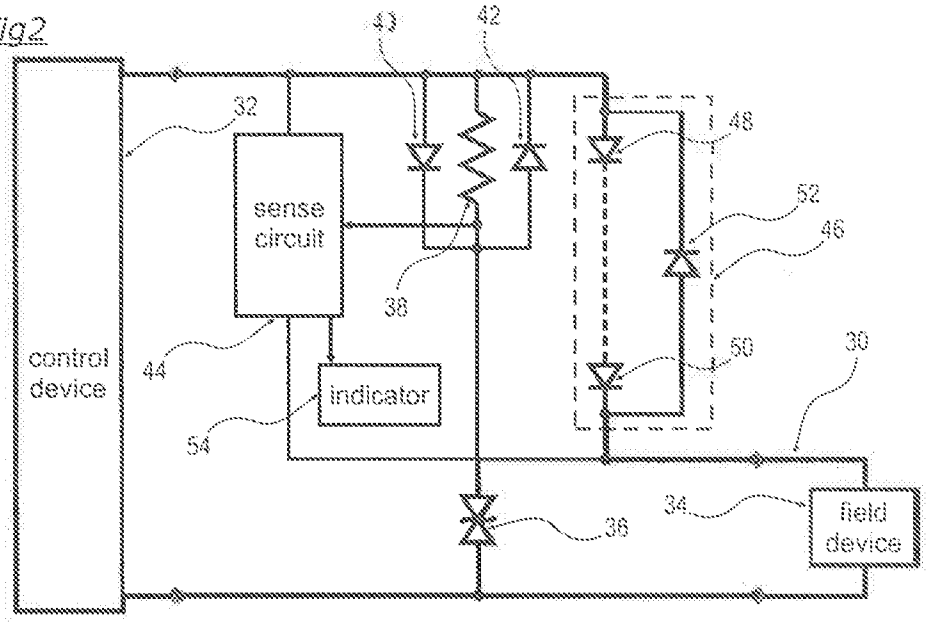
43
42
32
48
sense circuit
52
46
38
control device
44
indicator
50
30
54
34
field device
36

Fig3

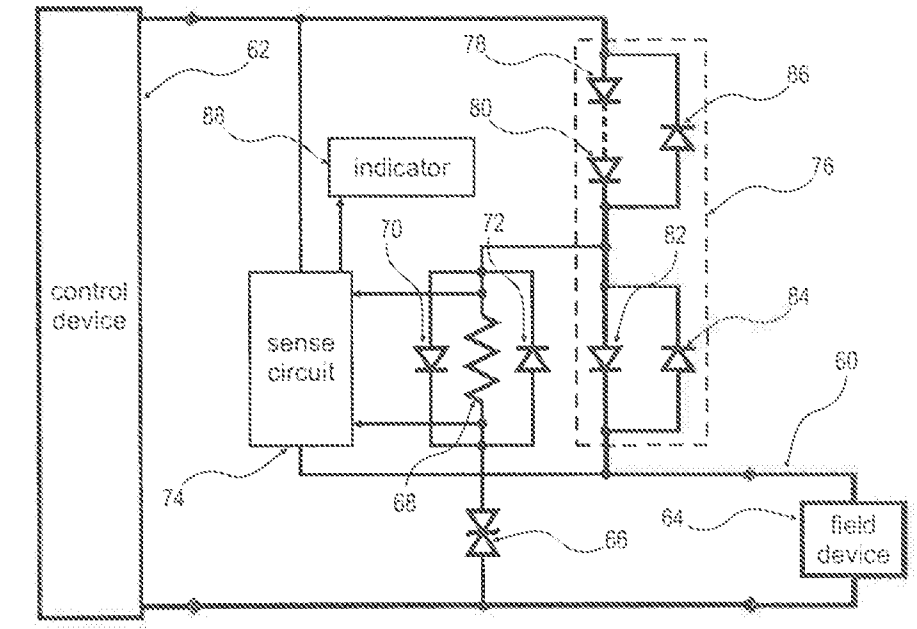
control device
62
78
86
80
68
indicator
76
70
72
82
84
sense circuit
60
74
68
64
field device
66