(12) INTERNATIONAL APPLICATION PUBLISHED UNDER THE PATENT COOPERATION TREATY (PCT)

(19) World Intellectual Property Organization
International Bureau

(43) International Publication Date
1 June 2006 (01.06.2006)

PCT

(10) International Publication Number
WO 2006/056091 A1

(51) International Patent Classification:
H01J 37/32 (2006.01) *C23C 16/458* (2006.01)
C23C 16/509 (2006.01)

(21) International Application Number:
PCT/CH2005/000692

(22) International Filing Date:
23 November 2005 (23.11.2005)

(25) Filing Language: English

(26) Publication Language: English

(30) Priority Data:
60/630,667 24 November 2004 (24.11.2004) US

(71) Applicant *(for all designated States except US)*: **UNAXIS BALZERS AG** [LI/LI]; FL-9496 Balzers (LI).

(72) Inventors; and

(75) Inventors/Applicants *(for US only)*: **AING, Phannara** [FR/FR]; 23, rue Lavoisier, F-94400 Vitry-sur-Seine (FR). **DELAUNAY, Laurent** [FR/FR]; 120, allée des Mésanges, F-76160 Saint Aubin Epinay (FR). **JOST, Stephan** [CH/CH]; Partana 3, CH-9478 Azmoos (CH). **ELYAAKOUBI, Mustapha** [FR/FR]; 4, rue du Paun, F-91130 Ris-orangis (FR).

(74) Common Representative: **UNAXIS BALZERS AG**; Patentabteilung SRLP, FL-9496 Balzers (LI).

(81) Designated States *(unless otherwise indicated, for every kind of national protection available)*: AE, AG, AL, AM, AT, AU, AZ, BA, BB, BG, BR, BW, BY, BZ, CA, CH, CN, CO, CR, CU, CZ, DE, DK, DM, DZ, EC, EE, EG, ES, FI, GB, GD, GE, GH, GM, HR, HU, ID, IL, IN, IS, JP, KE, KG, KM, KN, KP, KR, KZ, LC, LK, LR, LS, LT, LU, LV, LY, MA, MD, MG, MK, MN, MW, MX, MZ, NA, NG, NI, NO, NZ, OM, PG, PH, PL, PT, RO, RU, SC, SD, SE, SG, SK, SL, SM, SY, TJ, TM, TN, TR, TT, TZ, UA, UG, US, UZ, VC, VN, YU, ZA, ZM, ZW.

(84) Designated States *(unless otherwise indicated, for every kind of regional protection available)*: ARIPO (BW, GH, GM, KE, LS, MW, MZ, NA, SD, SL, SZ, TZ, UG, ZM, ZW), Eurasian (AM, AZ, BY, KG, KZ, MD, RU, TJ, TM), European (AT, BE, BG, CH, CY, CZ, DE, DK, EE, ES, FI, FR, GB, GR, HU, IE, IS, IT, LT, LU, LV, MC, NL, PL, PT, RO, SE, SI, SK, TR), OAPI (BF, BJ, CF, CG, CI, CM, GA, GN, GQ, GW, ML, MR, NE, SN, TD, TG).

Published:
— *with international search report*

[Continued on next page]

(54) **Title:** VACUUM PROCESSING CHAMBER FOR VERY LARGE AREA SUBSTRATES

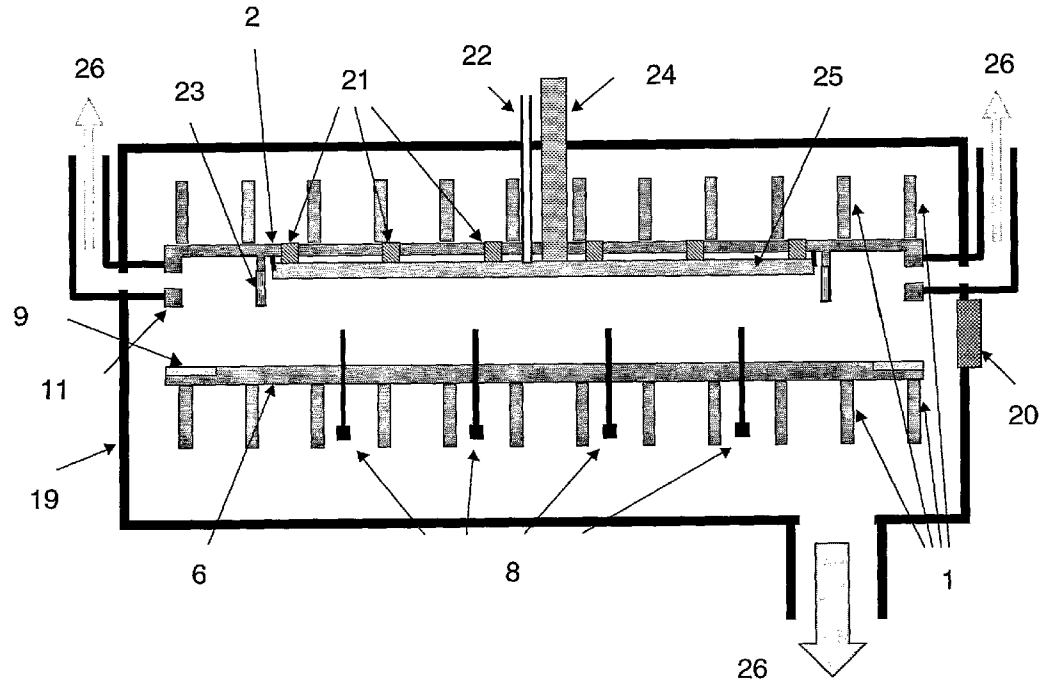

(57) **Abstract:** A plasma reactor for PECVO treatment of large-size substrates according to the invention comprises a vacuum process chamber as an outer chamber and at least one inner reactor with an electrode showerhead acting as RF antenna, said inner reactor again comprising a reactor bottom and a reactor top, being sealingly connected at least during treatment of substrates in the plasma reactor and separated at least during loading/unloading of the substrates. Further embodiments comprise a sealing for said reactor to/bottom and a suspender for the RF antenna/electrode showerhead.

WO 2006/056091 A1

— *before the expiration of the time limit for amending the claims and to be republished in the event of receipt of amendments*

For two-letter codes and other abbreviations, refer to the "Guidance Notes on Codes and Abbreviations" appearing at the beginning of each regular issue of the PCT Gazette.