(12) INTERNATIONAL APPLICATION PUBLISHED UNDER THE PATENT COOPERATION TREATY (PCT)

(19) World Intellectual Property Organization
International Bureau

(43) International Publication Date
03 February 2022 (03.02.2022)

WIPO | PCT

(10) International Publication Number
WO 2022/025937 A1

(51) International Patent Classification:
E21B 34/14 (2006.01) *E21B 34/10* (2006.01)
E21B 23/04 (2006.01)

(21) International Application Number:
PCT/US2020/045049

(22) International Filing Date:
05 August 2020 (05.08.2020)

(25) Filing Language: English

(26) Publication Language: English

(30) Priority Data:
16/945,380 31 July 2020 (31.07.2020) US

(71) Applicant: **HALLIBURTON ENERGY SERVICES, INC.** [US/US]; 3000 N. Sam Houston Pkwy E., Houston, Texas 77032 (US).

(72) Inventors: **MACEK, Mark D.**; 12499 CR 42, Tyler, Texas 75704 (US). **DELZELL, Christopher R.**; 2205 Chula Vista Dr., Plano, Texas 75023 (US).

(74) Agent: **LI, William** et al.; 1750 Tysons Blvd., Suite 1800, Tysons Corner, Virginia 22102 (US).

(81) Designated States *(unless otherwise indicated, for every kind of national protection available)*: AE, AG, AL, AM, AO, AT, AU, AZ, BA, BB, BG, BH, BN, BR, BW, BY, BZ, CA, CH, CL, CN, CO, CR, CU, CZ, DE, DJ, DK, DM, DO, DZ, EC, EE, EG, ES, FI, GB, GD, GE, GH, GM, GT, HN, HR, HU, ID, IL, IN, IR, IS, IT, JO, JP, KE, KG, KH, KN, KP, KR, KW, KZ, LA, LC, LK, LR, LS, LU, LY, MA, MD, ME, MG, MK, MN, MW, MX, MY, MZ, NA, NG, NI, NO, NZ, OM, PA, PE, PG, PH, PL, PT, QA, RO, RS, RU, RW, SA, SC, SD, SE, SG, SK, SL, ST, SV, SY, TH, TJ, TM, TN, TR, TT, TZ, UA, UG, US, UZ, VC, VN, WS, ZA, ZM, ZW.

(84) Designated States *(unless otherwise indicated, for every kind of regional protection available)*: ARIPO (BW, GH, GM, KE, LR, LS, MW, MZ, NA, RW, SD, SL, ST, SZ, TZ, UG, ZM, ZW), Eurasian (AM, AZ, BY, KG, KZ, RU, TJ, TM), European (AL, AT, BE, BG, CH, CY, CZ, DE, DK, EE, ES, FI, FR, GB, GR, HR, HU, IE, IS, IT, LT, LU, LV, MC, MK, MT, NL, NO, PL, PT, RO, RS, SE, SI, SK, SM, TR), OAPI (BF, BJ, CF, CG, CI, CM, GA, GN, GQ, GW, KM, ML, MR, NE, SN, TD, TG).

Published:
— *with international search report (Art. 21(3))*

(54) Title: SHIFTABLE COVERS, COMPLETION SYSTEMS, AND METHODS TO SHIFT A DOWNHOLE COVER IN TWO DIRECTIONS

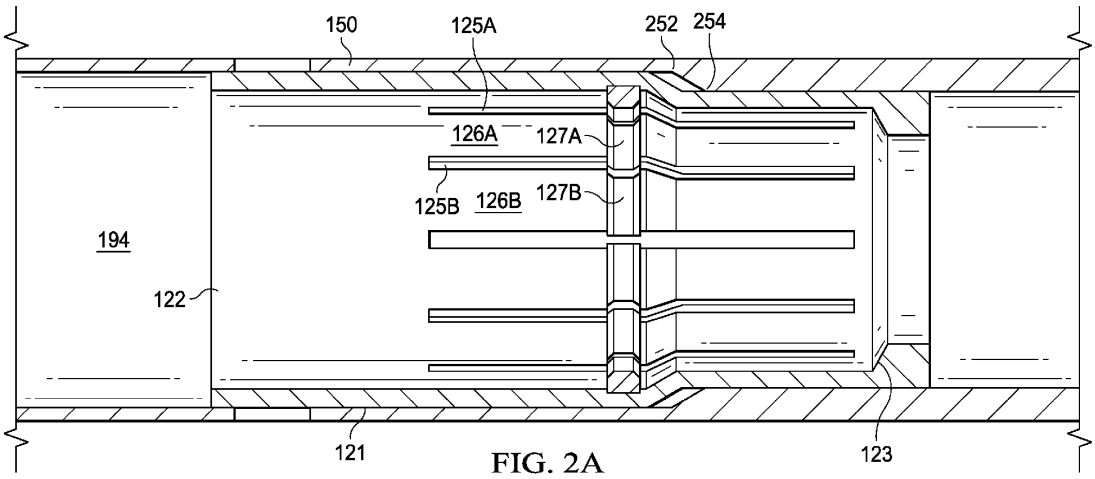

FIG. 2A

(57) Abstract: The disclosed embodiments include shiftable covers, completion systems, and methods to shift a downhole cover in two directions. A shiftable cover includes a hollow interior configured to receive a diverter flowing in a first direction. The shiftable cover also includes a diverter seat disposed in the hollow interior and configured to retain the diverter. The shiftable cover also includes a plurality of segments configured to collapse in response to shifting of the shiftable cover from a first position to a second position to retain the diverter, and un-collapse in response to shifting of the shiftable cover from the second position towards the first position.

WO 2022/025937 A1