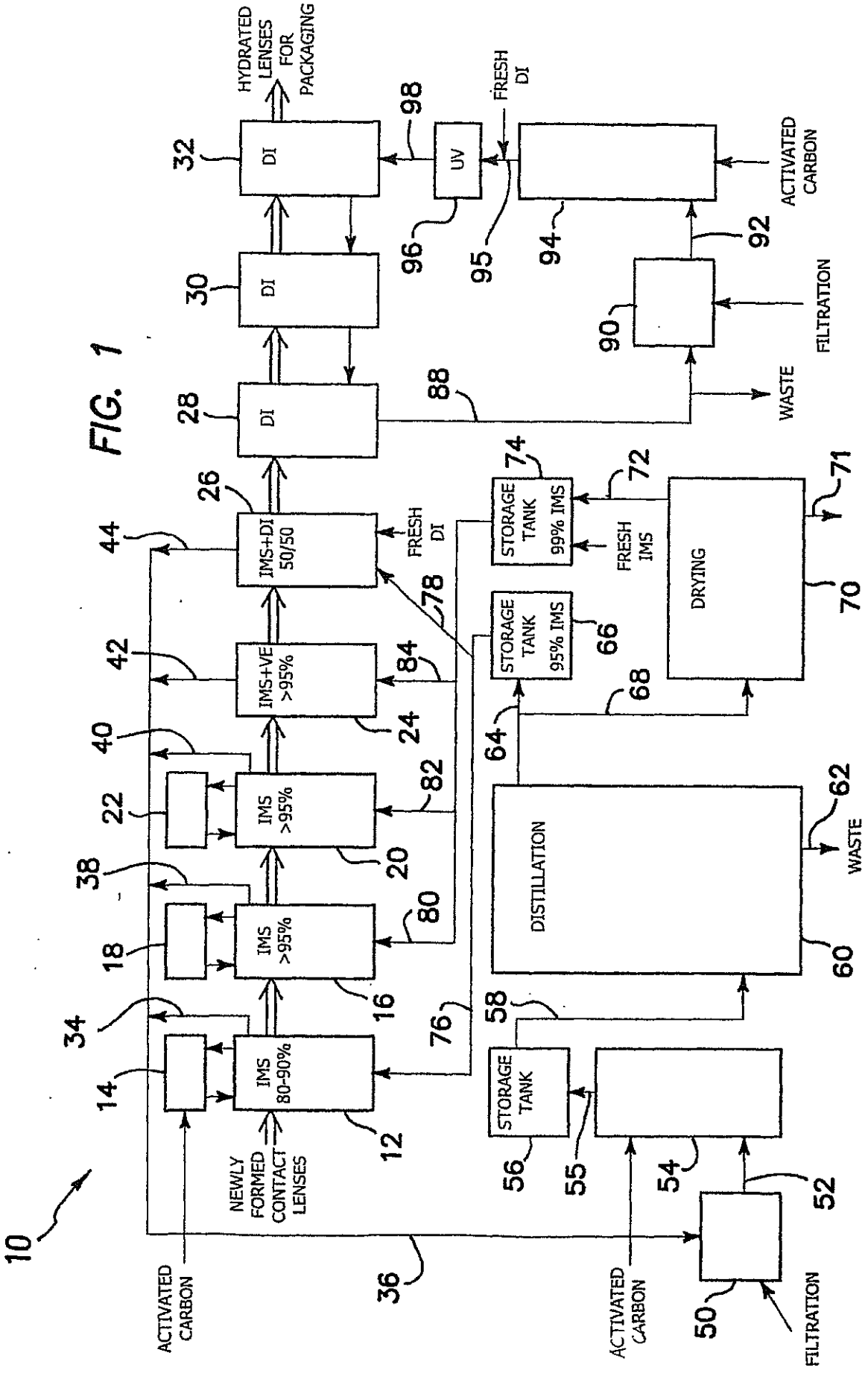
10
ACTIVATED CARBON
NEWLY FORMED CONTACT LENSES
IMS 80-90%
IMS >95%
IMS >95%
IMS+VE >95%
IMS+DI 50/50
DI
DI
DI
UV
HYDRATED LENSES FOR PACKAGING
FRESH DI
ACTIVATED CARBON
FILTRATION
WASTE
STORAGE TANK
STORAGE TANK
STORAGE TANK
DISTILLATION
DRYING
FRESH IMS
99% IMS
95% IMS
WASTE
ACTIVATED CARBON
FILTRATION
12
14
16
18
20
22
24
26
28
30
32
34
36
38
40
42
44
50
52
54
55
56
58
60
62
64
66
68
70
71
72
74
76
78
80
82
84
88
90
92
94
95
96
98

FIG. 1

FIG. 2

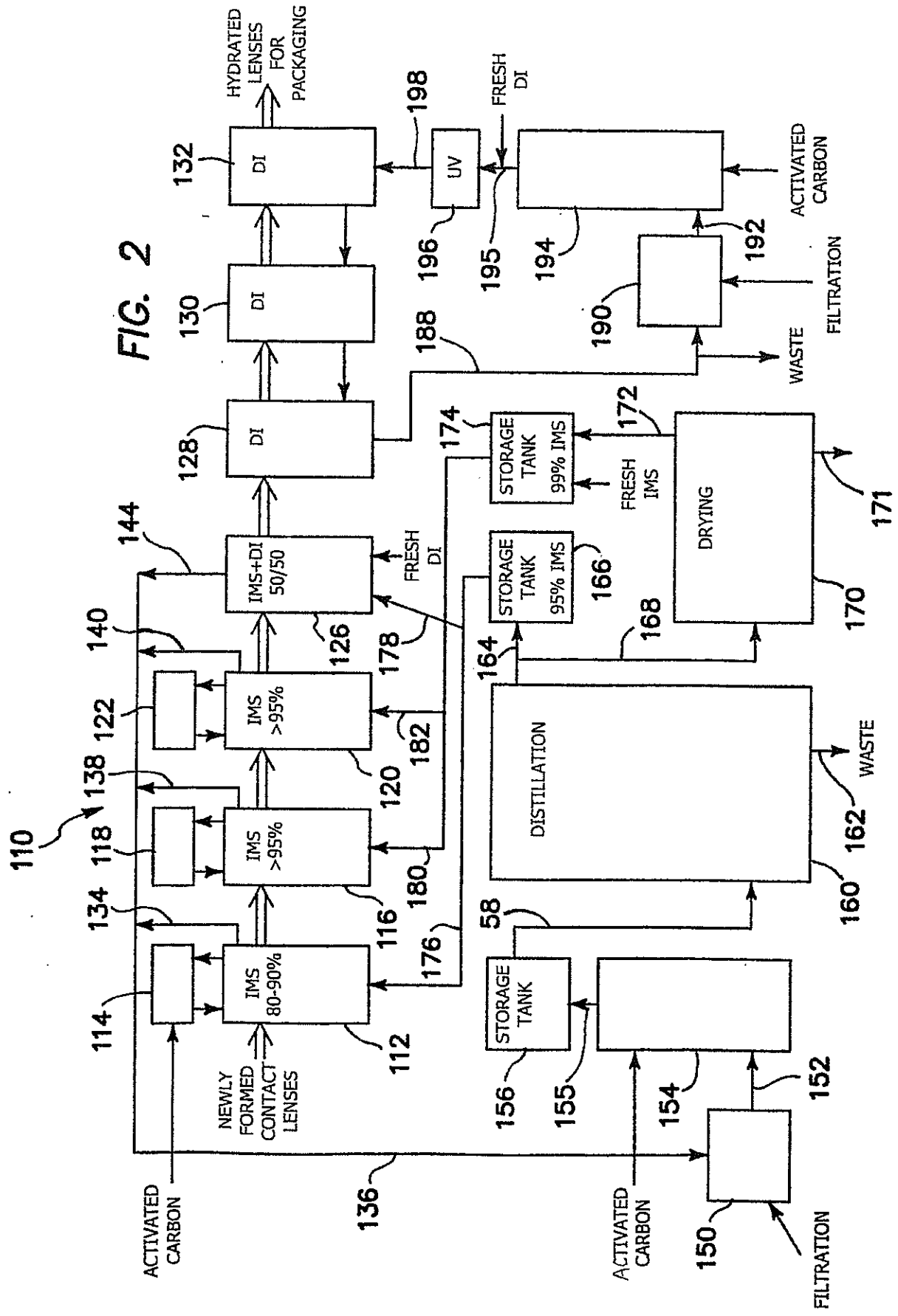
110
ACTIVATED CARBON
NEWLY FORMED CONTACT LENSES
IMS 80-90%
IMS >95%
IMS >95%
IMS+DI 50/50
DI
DI
DI
DI
HYDRATED LENSES FOR PACKAGING
UV
FRESH DI
ACTIVATED CARBON
FILTRATION
WASTE
STORAGE TANK
STORAGE TANK 99% IMS
STORAGE TANK 95% IMS
FRESH IMS
DRYING
DISTILLATION
WASTE
ACTIVATED CARBON
FILTRATION
FRESH DI
112
114
116
118
120
122
126
128
130
132
134
136
138
140
144
150
152
154
155
156
160
162
164
166
168
170
171
172
174
176
178
180
182
188
190
192
194
195
196
198