(12) INTERNATIONAL APPLICATION PUBLISHED UNDER THE PATENT COOPERATION TREATY (PCT)

(19) World Intellectual Property Organization
International Bureau

(43) International Publication Date
4 April 2013 (04.04.2013)

WIPO | PCT

(10) International Publication Number
WO 2013/049659 A3

(51) International Patent Classification:
B01L 3/00 (2006.01) *C12M 1/00* (2006.01)

(21) International Application Number:
PCT/US2012/058042

(22) International Filing Date:
28 September 2012 (28.09.2012)

(25) Filing Language: English

(26) Publication Language: English

(30) Priority Data:
61/541,366 30 September 2011 (30.09.2011) US

(71) Applicant: **LIFE TECHNOLOGIES CORPORATION** [US/US]; 5791 Van Allen Way, Carlsbad, CA 92008 (US).

(72) Inventors: **DANEHY, Ronald**; LIFE TECHNOLOGIES CORPORATION, c/o IP Docketing, 5781 Van Allen Way, Carlsbad, CA 92008 (US). **LIM, Gary**; LIFE TECHNOLOGIES CORPORATION, c/o IP Docketing, 5781 Van Allen Way, Carlsbad, CA 92008 (US). **FREUDENTHAL, Jacob**; LIFE TECHNOLOGIES CORPORATION, c/o IP Docketing, 5781 Van Allen Way, Carlsbad, CA 92008 (US).

(74) Agent: **WEBER, David**; LIFE TECHNOLOGIES CORPORATION, c/o IP Docketing, 5781 Van Allen Way, Carlsbad, CA 92008 (US).

(81) Designated States *(unless otherwise indicated, for every kind of national protection available)*: AE, AG, AL, AM, AO, AT, AU, AZ, BA, BB, BG, BH, BN, BR, BW, BY, BZ, CA, CH, CL, CN, CO, CR, CU, CZ, DE, DK, DM, DO, DZ, EC, EE, EG, ES, FI, GB, GD, GE, GH, GM, GT, HN, HR, HU, ID, IL, IN, IS, JP, KE, KG, KM, KN, KP, KR, KZ, LA, LC, LK, LR, LS, LT, LU, LY, MA, MD, ME, MG, MK, MN, MW, MX, MY, MZ, NA, NG, NI, NO, NZ, OM, PA, PE, PG, PH, PL, PT, QA, RO, RS, RU, RW, SC, SD, SE, SG, SK, SL, SM, ST, SV, SY, TH, TJ, TM, TN, TR, TT, TZ, UA, UG, US, UZ, VC, VN, ZA, ZM, ZW.

(84) Designated States *(unless otherwise indicated, for every kind of regional protection available)*: ARIPO (BW, GH, GM, KE, LR, LS, MW, MZ, NA, RW, SD, SL, SZ, TZ, UG, ZM, ZW), Eurasian (AM, AZ, BY, KG, KZ, RU, TJ, TM), European (AL, AT, BE, BG, CH, CY, CZ, DE, DK, EE, ES, FI, FR, GB, GR, HR, HU, IE, IS, IT, LT, LU, LV, MC, MK, MT, NL, NO, PL, PT, RO, RS, SE, SI, SK, SM, TR), OAPI (BF, BJ, CF, CG, CI, CM, GA, GN, GQ, GW, ML, MR, NE, SN, TD, TG).

Published:

— *with international search report (Art. 21(3))*

— *before the expiration of the time limit for amending the claims and to be republished in the event of receipt of amendments (Rule 48.2(h))*

(88) Date of publication of the international search report:
4 July 2013

(54) Title: SYSTEMS AND METHODS FOR BIOLOGICAL ANALYSIS

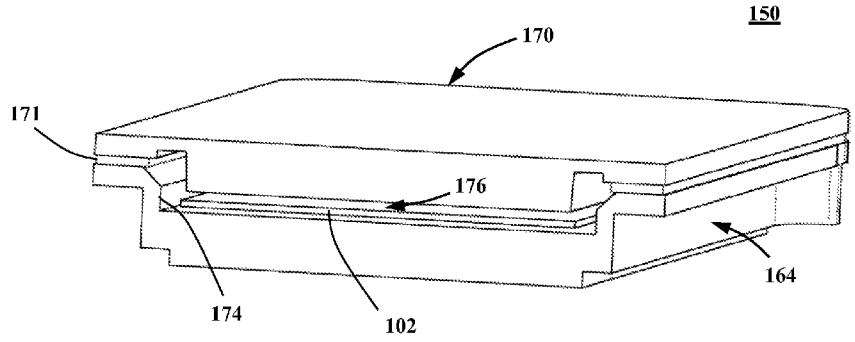

FIG. 5

(57) Abstract: A case for containing a plurality of biological samples contains a base, a substrate and a cover. The substrate is attached to the base and comprises a plurality of reaction regions configured to receive one or more biological samples. The cover comprises an inner surface and is configured to be attached to the base such that the base and cover together provide a cavity containing the substrate. The inner surface includes a central area and a recessed area disposed about the central area. The central area is configured to cover the reaction regions, while the recessed area is offset from the central area in a direction normal to the inner surface.

WO 2013/049659 A3