Incubation Tray

The present invention relates to an elongated incubation channel with two opposite longitudinal walls, a recess, and a base, that can be equipped with an elongated test strip with a rear surface and a front surface, wherein the test strip has its rear surface facing the base of the incubation channel and is coated on its front surface with at least one analytical reagent coated, further having a fastening means, by means of which the incubation channel can be connected to at least one additional incubation channel to form an assembly of incubation channels, wherein a preferably horizontal outward supporting frame is installed on one of the longitudinal walls.

Various test systems with which patient samples can be tested for the presence of antibodies are known in the area of laboratory diagnostics. These detection methods make it possible to draw conclusions concerning the occurrence of diseases that occur in conjunction with such specific antibodies. The disease may occur as the result of formation of autoantibodies, or the antibodies are formed in reaction to the disease, for example in reaction to invasion of pathogenic viruses. Examples of such diseases include infections, inflammatory disorders such as rheumatoid diseases, metabolic diseases such as diabetes, and neurologic diseases.

Detection of diagnostically relevant antibodies is ordinarily carried out by means of a technology referred to as stage diagnosis, in which sensitive screening is first carried out, following by specific confirmation. In routine serology, ELISA (Enzyme-linked immunosorbent assay) is often used for screening, while immunoblot strips, particularly Western blot, dot blot, or line blot strips, are primarily used in the confirmation test.

As the need for such test systems is considerable and the reagents used are often expensive, difficult to obtain, and only available in small amounts, simplification and optimization of the processes used in carrying out the respective test is essential. In particular, the analytical/diagnostic equipment used must allow the numerous tests to be carried out on a high-throughput scale with as few disturbances as possible and using a simple parallel method. Any simplification of the process, maintenance, or cleaning steps, any elimination of even the smallest source of risk, and any minimization of the amount of reagents to be used lead to considerable savings for the user.

One should therefore pay particular attention to the incubation channels in which said test strips are incubated in carrying out the tests with various reagents under various conditions.

Devices with incubation channels that are used for such test systems can of course also be used in other technical fields in which test strips or other strip-shaped carriers are to be incubated in a liquid. For example, strips are also used in chemical analysis for simple determination of the concentration of pH value or of inorganic ions. In the production of test strips or similar carriers, it may also be necessary to incubate them individually in a liquid.

A number of incubation channels are described in the prior art that can be used for various analytical and diagnostic tests.

DE202012004404U1 discloses an incubation channel in a device for testing of a patient sample that is equipped with an elongated test strip, wherein the test strip is inserted into the incubation channel with its rear surface facing the channel base. For handling of at least two incubation channels, a rack is equipped with a plurality of receiving slots into which an incubation channel and/or an assembly of at least two incubation channels can be inserted. In addition to fixation of the assembly by the rack with the receiving slots, the incubation channel can also have a fastening element on one longitudinal side, by means of which it can be connected to an additional incubation channel, for example a snap or clip connection.

However, DE202012004404U1 does not disclose that at least two linked incubation channels can be connected to one another independently of a rack via a combination of fastening elements on both longitudinal sides of the incubation tray and a supporting frame.

Thus an assembly of the incubation trays described in DE202012004404U1 cannot be moved independently of the rack. The receiving slots in the rack are required for fixation and stabilizing of the assembly. A holding element on only one longitudinal side can in the best case fix in place only two additional small incubation trays having a low weight, but not a larger assembly that can be moved independently of the rack.

Between the incubation channels disclosed in DE202012004404U1, there are gaps which allow the sprayed liquid to flow through the assembly onto the rack and the receiving slots contained therein. The result is that cleaning is highly time-consuming, or the rack with the receiving slots must be frequently replaced.

Furthermore, DE202012004404U1 discloses an incubation channel that can be equipped with a test strip. In one embodiment, floating of the test strip is prevented by gluing the strip to the base of the incubation channel using an adhesive. However, this means that in the case of reversible adhesion, there is a risk that the strip will become detached during longer-term incubation in an aqueous solution. If an insoluble adhesive is used, on the other hand, the strip cannot be removed from the device after testing and be stored in a dry state for documentation.

As an alternative solution, DE202012004404U1 discloses the possibility of providing the incubation channel in the base area with opposing locking catches. However, this allows only relatively solid test strips to be fixed. The test strips commonly used commercially do not provide enough resistance to allow plastic locking catches to engage. There is also a risk that the strips will become damaged on engaging, as expressly stated in DE202012004404U1.

Removal from the incubation channel after engaging with the locking catches is also difficult, if not impossible.

Lastly, DE202012004404U1 discloses the use of clips for the fixation of test strips near the base. Because of the closure mechanism into which the strips are clipped, there is also a risk of damage in this embodiment. Finally, a clasp covers the test strip at least partially as seen from above. Because of the covering and shadow formation, this makes imaging and subsequent automatic diagnosis more difficult.

Embodiments of the invention seek to provide a system with flexibly connectible incubation channels, in which the incubation channels are connected to one another and can be moved independently of a rack as a unit, wherein the risk that the assembly may fall apart may be reduced compared to the systems described in the prior art.

Embodiments of the present invention further seek to provide a system with flexibly connectible incubation channels that may be easier to clean and maintain than the systems described in the prior art.

The present invention therefore also seek to provide an improved incubation channel that allows the incubation of test strips, wherein the test strips are fixed to the base in such a manner that they are covered from all sides during incubation in aqueous solution, but can easily be removed after incubation.

At the same time, the incubation channel is intended to allow the preparation of high quality images of the strips after incubation, which can then be manually or automatically read and evaluated for diagnosis.

In this invention, fixation of the test strips is to be achieved in such a way that damage to the test strips, which often with expensive, difficult-to-produce analytical reagents, is virtually excluded.

These and other objectives are achieved by means of the subject matter of the present application, and particularly also by means of the subject matter of the attached independent claims, wherein embodiments are derived from the dependent claims.

In a first embodiment, there is provided an elongated incubation channel with two opposite longitudinal walls, a recess, and a base,

> equipped with an elongated test strip with a rear surface and a front surface,
>
> wherein the test strip has its rear surface facing the base of the incubation channel and is coated on its front surface with at least one analytical reagent coated,
>
> further having a fastening means, by means of which the incubation channel is configured to be connected to at least one additional incubation channel to form an assembly of incubation channels,

wherein a horizontal outward supporting frame is installed on one of the longitudinal walls,

at least two holding elements for fixation of the test strip, wherein the incubation channel and the holding elements are produced as one piece with the holding elements protruding directly from the longitudinal walls of the incubation channel,

and wherein the longitudinal wall with the outward supporting frame, the supporting frame itself, and the other longitudinal wall are adapted to one another in such a manner that the supporting frame of the incubation channel in the assembly lies on the other longitudinal wall of an additional incubation channel.

In a preferred embodiment, the supporting frame does not cover the recess.

In a further preferred embodiment, the supporting frame extends along the longitudinal axis of the incubation channel at least as far as the recess.

In a further preferred embodiment, a frame notch is located on the other longitudinal wall, preferably in the form of the supporting frame lying thereon in the assembly.

In a further preferred embodiment, the end of the supporting frame along the transverse axis is measured in such a way that it connects to the longitudinal wall of the additional incubation tray and forms a vertical extension thereof.

In a further preferred embodiment, the fastening means comprises at least one unit with a protruding element on the one longitudinal side of the incubation channel and a receiving element on the other longitudinal side of the incubation channel.

In a further preferred embodiment, the protruding element of the fastening means is on the same longitudinal side of the incubation channel as the supporting frame.

In a further preferred embodiment, the fastening means allows a connection between the incubation channel and the additional incubation channel that can be connected and disconnected multiple times.

In a further preferred embodiment, a fastening means is configured at each end of the incubation channel, preferably with a protruding element on the one longitudinal side and a receiving element adapted thereto on the other longitudinal side.

In a further preferred embodiment, the recess does not extend over the entire length of the incubation channel, but extensions are located at the two longitudinal ends of the incubation channel, each of which houses one unit of the fastening means.

In a further preferred embodiment, each extension has a head that is connected via a connecting element with the recess,

> wherein the connecting element is configured vertically at the level of the supporting frame, giving rise to a hollow that is arranged below it perpendicular to the longitudinal axis of the incubation channel.

In a further preferred embodiment, the fastening means comprises a protruding element on the one longitudinal side and a receiving element adapted thereto on the other longitudinal side, wherein

the protruding element and the longitudinal wall with the supporting frame are configured on the one longitudinal side of the incubation channel and

the receiving element and the other longitudinal wall are configured on the other longitudinal side of the incubation channel

and they are preferably adapted to one another such that the position of at least two identical incubation channels in the assembly is fixed both by engagment of the protruding elements with the receiving element by the supporting frame lying on the frame notch of the other longitudinal wall.

In a further preferred embodiment, the fastening means comprises a protruding element on the one longitudinal side and a receiving element adapted thereto on the other longitudinal side, wherein

the receiving element of the fastening means is open upwards and in the direction of the outer side of the longitudinal frame and

is configured in such a way that the protruding element is inserted from above into the receiving element until the former rests against the base of the latter.

In a further preferred embodiment, the fastening means comprises a protruding element on the one longitudinal side and a receiving element adapted thereto on the other longitudinal side,

and wherein the protruding element and the receiving element are adapted to each other in such a manner that on connection, the former engages with the latter with an audible click.

There is also disclosed an elongated incubation channel with two opposite longitudinal walls, a recess, and a base,

that can be equipped with an elongated test strip having a rear surface and a front surface,

wherein the test strip faces the base of the incubation channel with its rear surface and is coated on its front surface with one or more analytical reagents,

further comprising at least two holding elements for fixation of the test strip, preferably near the base,

characterized in that

the at least two holding elements are configured in the form of projecting elements extending out from the longitudinal wall and having notches, preferably near the base, i.e. preferably on the side and opening downward, and are preferably suitable for fixation of the holding elements near the base, for receiving the test strip.

In a preferred embodiment, the notch ends along the longitudinal axis of the incubation channel before the longitudinal wall.

In a preferred embodiment, the notch extends along the longitudinal axis of the incubation channel up to the longitudinal wall.

In a preferred embodiment, the at least two holding elements are arranged in pairs.

In a preferred embodiment, the incubation channel has at least four, preferably at least six, and even more preferably at least eight holding elements arranged in pairs.

In a preferred embodiment, the two holding elements of a pair on the two longitudinal sides are arranged diagonally offset with respect to each other along the longitudinal axis of the incubation channel.

In a preferred embodiment, the two holding elements of a pair are arranged on the two longitudinal sides at the same height along the longitudinal axis of the incubation channel.

In a preferred embodiment, the projecting element is vertically bevelled.

In a preferred embodiment, the projecting element is vertically rounded off.

In a preferred embodiment, the projecting element is configured in the form of a shaft.

In a preferred embodiment, the longitudinal axis of the projecting element runs perpendicular to the level determined by the base of the incubation channel.

In a preferred embodiment, the longitudinal axis of the projecting element runs perpendicular to the longitudinal axis of the incubation channel.

In a preferred embodiment, the projecting element runs parallel to the longitudinal axis of the incubation channel.

In a preferred embodiment, the two holding elements are positioned in a frame placed in the recess, which preferably sits on at least two feet of the holding element facing the base of the incubation channel.

In a preferred embodiment, the incubation channel further comprises the test strip, which preferably has an extension protruding from the recess by means of which it can be pulled out.

According to the invention, the incubation channel may have a fastening means that is suitable for combining the incubation channel with at least one additional incubation channel into an

assembly of incubation channels. In assembly form, the incubation channels can be managed as a unit. For example, they can be used together in one device, emptied or washed, without having to move each of the individual channels in the assembly. The assembly comprises at least 2, and preferably at least 3, 4, 5, 10, 12, 15, 20, 24, 36 or 50 incubation channels. The number of incubation channels in the assembly is essentially limited by the receiving capacity of the device in which the assembly and the samples located in the individual channels are processed. Similarly, the number of incubation channels is also limited by the requirement that the assembly must be sufficiently stable and not too heavy.

The assembly preferably consists of essentially or actually identical incubation channels. In this connection, however, what is important is only the contact surfaces of the incubation channels, which must be configured in such a way that the fastening means and other relevant elements such as the supporting frame according to the invention–of the one wall allows combination with the next incubation channel in the assembly respectively. Other characteristics of the individual incubation channels, for example their content, their labelling, their width etc. may be varied. For analytical or diagnostic applications, each of the incubation channels, even if they are otherwise made in the same way or even identical, may have a label that assigns the sample contained therein to a particular experiment or patient.

The preferred fastening means shows a protruding element and a receiving element (often referred to in the prior art as “male” or “female“ parts) which are inserted into one another and engage, forming a connection between the incubation channels. The protruding element shows, on or near its end that points away from the incubation channel, at least one location that is wider than the end facing the incubation channel. The receiving element is adapted to this form, specifically in that it is open both to the top for receiving the protruding element and also in the direction of the outer side of the longitudinal channel, so that after engaging, the two elements cannot be separated from each other by means of a movement in an exclusively vertical direction, but require lifting or twisting out with a vertical component, so that the protruding element is inserted in the receiving element from above, with the final vertical position of the protruding element preferably being determined by the base of the receiving element on which the protruding element rests on engaging. Exemplary fastening means are disclosed in various variants in the prior art, for example the connection referred to as a dovetail connection.

A connection leading to the assembly between incubation channels with fastening means such as the classical dovetail connection may be multiply installed and then again detached. In an alternative embodiment, the incubation channel has a fastening means, wherein the incubation tray can only be combined once with an additional incubation tray. This can be achieved, for example, in that in the protruding element a predetermined breaking point is incorporated into the protruding element, while the latter is engaged very firmly in the receiving element and cannot be detached using ordinary strength. It is then only possible to detach the connection by destroying the fastening means.

A particularly preferred variant of the fastening means is the dovetail connection with a straightened edge. In this case, viewed from above, the edge of the protruding element facing

the incubation channel is perpendicular to the longitudinal axis of the elongated incubation channel. The advantage lies in that a vertically twisting movement can be used to connect the trays to each other to form an assembly or to separate them from each other again. This allows the user to more conveniently remove incubation channels from the assembly compared to the classical dovetail connection.

Preferably, all of the incubation channels in the assembly according to the invention have the same fastening means with complementary elements. However, it is also possible that various types of incubation channels may be contained in the assembly with fastening means that are not compatible with one another or are only compatible in certain combinations, for example in order to achieve certain arrangements or patterns of various types of incubation channels within a larger assembly, for example alternating of two types of incubation channels. For example, type A may have an incubation channel on the one side of the receiving element of a first fastening means, e.g. a dovetail connection, and on the other side the protruding element of a second fastening means, which for example imitates a ball joint. The incubation channel of type A therefore cannot be directly connected to a further incubation channel of type A.

In a preferred embodiment, the term "test strip" as used herein is understood to mean a preferably elongated carrier that is sufficiently chemically inert with respect to common solvents, especially aqueous-based solvents, and is coated with a reagent that is suitable for a desired chemical reaction, particularly an analytical process, and particularly preferably a laboratory diagnostic process. For example, it may be a nitrocellulose strip with an antigen. In a preferred embodiment, the term "elongated" as used herein is understood to mean that the length ratio of the longer to the shorter side is, in order of increasing preference, at least 1.5:1, 2:1, 3:1, 4:1, 5:1, 7.5:1, 10:1, 15:1 or 20:1. In a further preferred embodiment, the term "coated" as used herein is understood to mean that the reagent is connected to the test strip in such a manner that a liquid in contact with the front side of the strip is also in contact with the reagent. For example, the reagent may be blotted onto the surface of the front side, or the test strip may show an essentially uniform concentration of the reagent at each location. Suitable test strips are described in the prior art and are commercially available, for example Line Blots from EUROIMMUN, Lübeck. In a preferred embodiment, the term "analytical reagent" as used herein is understood to mean a chemical compound that reacts chemically or physically with an analyte contained in a sample or another aqueous solution to be tested. This reaction can be detected. For example, the analytical reagent may be an antigen, particularly an epitope-containing polypeptide, to which an antibody to be detected, preferably an autoantibody, from a sample to be tested binds, after which the resulting antigen-antibody complex can be detected by means of a further enzyme-conjugated antibody. As an alternative, the analytical reagent may also be e.g. a pH-dependent dye that takes on a specified indicative colour when it is exposed to a solution with a certain pH value.

In a preferred embodiment, the term "incubation channel" as used herein is understood to mean a preferably liquid-tight vessel with a base, two longitudinal walls, and two transverse walls. The incubation tray is configured in elongated form in order to be able to hold a test strip. In an

incubation tray having a rectangular shape, the length ratio of the transverse wall to longitudinal wall should be at least 1:2, and more preferably 1:3, 1:4, 1:5, 1:6, 1:7, 1:8, 1:9 or 1:10. The incubation tray is preferably composed of material that is resistant to aqueous solutions, such as polystyrene, polyethylene, or polypropylene. In a preferred embodiment, the incubation tray is equipped with a test strip, and optionally, contained in a package. In a further preferred embodiment in addition to the test strip, the incubation channel contains liquid. This may be a sample to be tested, a wash solution, or a solution containing chemical reagents, preservatives, or analytes.

The incubation channel may be used purely manually by inserting and removing the reagents required for chemical reagents by hand, particularly those used in analytical or diagnostic tests. Preferably, however, the incubation channel or the assembly is placed in a device that carries out numerous steps, and ideally all of the steps, in fully automatic operation, if possible without requiring the presence of technical personnel. Such a device is equipped for stocking, as well as for insertion and aspiration of suitable buffers and reagents, ideally in addition to preparing suitable images of the fully-processed test strip.

The incubation channel is preferably in conical form in order to minimize the minimum volume of liquid required to cover the test strip.

The incubation channel preferably has an extension on at least one and preferably on the two longitudinal ends. This has the advantage of protecting against spraying of liquid in the directions of the longitudinal ends of the incubation channel. The extension, particularly the head thereof, is a preferred starting point for the positioning of elements of the fastening means. A hollow under the connecting element can be used to support the incubation channel in an apparatus, or in a transportation or incubation tray, which has the corresponding suitable elevation. The incubation channel of the assembly is then fixed in place inside the apparatus or tray, and cannot slip out of place if the incubation channel of the assembly is pivoted or shaken.

Optionally, the incubation channel of the assembly may be provided with a cover. This may be a continuous film that covers the entire assembly, or individual covers tailored to the shape of the incubation channel.
According to the invention, the incubation channel may also have a preferably externally supporting frame attached to one of the longitudinal walls. This supporting frame, which preferably does not cover the recess, so as not to make optical observation or imaging of the test strip more difficult, may have any desired form, provided that it is adapted to the longitudinal wall of the additional incubation wall in the assembly in such a way that it lies thereon in the assembly and thus forms a gapless cover longitudinal to the longitudinal axis of the incubation channel, so that a liquid dripping onto the assembly hits either the frame or the recess. Preferably, the longitudinal wall on which the supporting frame lies has a frame notch that is adapted in shape to said frame. Not as a part of, but analogous to the fastening means, the supporting frame can thus function as a protruding element and the frame notch as a receiving element. The supporting frame is preferably at an angle of 60 to 120°, more preferably 75 to

105°, even more preferably 80 to 100°, and most preferably 90°, i.e. horizontal, with respect to the longitudinal wall extending outward vertically from the base. In the case of a conical longitudinal, the angle is measured corresponding to a vertical longitudinal wall in the same vertical position and connected to the outer frame. It is of decisive importance that the outer frame is configured in such a manner that it lies in the assembly on the longitudinal wall of the additional incubation wall.
The supporting frame preferably extends along the longitudinal axis of the incubation channel at least as far as the recess. This ensures that liquid sprayed laterally will not flow between the incubation channels of an assembly. The supporting frame is preferably arranged parallel to the base of the incubation channels. In a preferred embodiment, its underside is configured so that it lies parallel on the other longitudinal wall of the next incubation channel in the assembly, but with its upper surface inclined like a slanting roof so that sprayed liquid flows back into the recess.

The supporting frame preferably forms a vertical extension of the longitudinal wall on which it lies. This means that it forms an extension of the wall at the angle at which the wall extends upward from the base of the recess, for example 90° in the case of a vertical wall and an angle of more than 90° in a correspondingly configured incubation channel, corresponding to the angle, at which the longitudinal wall extends from the base of the recess.

Moreover, the incubation tray according to the invention may also include a system comprising at least two holding elements that are suitable for properly positioning the text strip in the incubation channel for carrying out chemical and biological reactions, particularly laboratory diagnostic procedures. In this case, one must in particular prevent floating of the test strip, which leads to drying and turning away of at least one side of the strip from reagent-containing liquids, as well as turning over of the test strip, which interferes with observation of imaging.

The objective according to the invention is achieved by means of holding elements in the incubation channel that protrude from at least one longitudinal wall, wherein the two longitudinal walls of the incubation channel should preferably each have at least one holding element. Each holding element consists of a projecting element protruding from the longitudinal wall near the base. This protrudes so far into the inside of the recess that it is suitable, particularly in combination with an additional holding element preferably located on the opposite longitudinal wall, for limiting to a certain extent the movement of a test strip. In carrying out the test, one can then pour enough liquid into the incubation channel so that the strip is sufficiently covered. The amount of liquid can be minimized by means of suitable arrangements that allow pivoting of the incubation channel, wherein the liquid flows from one to the other longitudinal end and back. Such arrangements are described in the prior art, for example in EP08169465.5 or **EP 2191893**.

The holding element has a notch below the projecting element that is large enough so that while there is room for the test strip under it, and preferably so that on movement of the incubation

channel slight upward and downward movements occur so as to provide optimum exposure to the surrounding liquid and the reagents contained therein, it cannot turn about its longitudinal axis. Depending on the width of the strip and the incubation channel, the notch along the longitudinal axis of the incubation channel may end before the longitudinal wall. Conversely, it is also possible for the notch along the longitudinal axis of the incubation channel to reach the longitudinal wall, i.e. it comprises the entire length between the longitudinal wall from which the projecting element protrudes and the end of the projecting element inside the incubation channel. In cases where the test strip is positioned on both sides by holding elements of this type, the strip may move over the entire width of the incubation channel, but is prevented from floating or turning by the projections.

With respect to the length of the projecting element of a holding element, it is essential that it must not extend to the opposite longitudinal side in any case. Preferably, the length of the projecting element along the transverse axis of the incubation channel on the base corresponds to less than 75, and even more preferably less than 50, 45, 40, 30, 25 or 20% of the width of the incubation channel at the base. In a further preferred embodiment, a test strip lying in the middle of the incubation channel whose width is 25, more preferably 50, and even more preferably 70% of the width of the incubation tray, is covered over a maximum of 30% of its width by the projection of the holding element.

The holding elements according to the invention position the test strip particularly effectively when they are arranged in pairs. This is the case for two holding elements if they are arranged along the longitudinal axis of the incubation channel on opposite longitudinal axes relative to the other elements in such a manner that their spatial proximity shows that they belong together. In this case, the two holding elements of a pair may be arranged diagonally offset with respect to each other on the two longitudinal sides along the longitudinal axis of the incubation channel, or along the same height of the longitudinal axis of the incubation channel. Preferably, the distance between the two holding elements of a pair along the longitudinal axis of the incubation channel is a maximum of 40, more preferably, 30, more preferably 20, more preferably 10, more preferably 7.5, more preferably 5, and more preferably 2.5% of the length of the recess of the incubation channel. The holding elements may also be arranged in alternating fashion along the longitudinal axis on both sides of the incubation tray.

The holding element may take the form of a horizontal mirror image of the letter L. Particularly preferably, the holding element is vertically bevelled, rounded off, or in the form of a distinct shaft. This reduces the shadow-forming area. The reduced shadow formation on the test strip provides better optical accessibility, which in turn provides improved recognition of the picture quality of the images. The configuration with a vertically bevelled or rounded-off form constitutes a particularly advantageous compromise between the stability of the holding element and minimizing shadow formation. The holding elements are suitable for fixing the test strip near the base, and in a preferred embodiment, a position is understood to refer to a vertical range that comprises the lower 80, more preferably 60, more preferably 50, more preferably 40, more

preferably 30, more preferably 20, more preferably 15, more preferably 10, and more preferably 5% of the height of the recess of the incubation channel.

The incubation channel and the holding elements are preferably produced as one piece. The holding elements will then protrude directly from the longitudinal walls of the incubation channel. As an alternative, the holding elements may be prepared in the form of holding element frames separated from the incubation channel. The holding element frame may be placed facing the base of the incubation channel by means of one or more, and preferably at least two, holding element frame feet, with the height of the holding element frame feet determining the distance of the holding element frames from the base of the incubation tray. As an alternative, the form or the size of the holding element frame may be adapted in such a way that in the case of a conical incubation channel, it lies directly on the longitudinal walls. For this purpose, the holding element frame is to be configured so that it is narrower than the recess near the upper end of the longitudinal walls, but wider than the base of the incubation channel. Preferably, the holding element frame is configured so that it is positioned at a level of less than 80, more preferably 60, more preferably 50, more preferably 40, more preferably 30, more preferably 20, or more preferably 15% of the height of the recess of the incubation channel. If the weight of the holding element frame itself is not sufficient, additional weights may be added to make it heavier.

A process according to the invention may comprise one or more of the following steps, preferably but not necessarily in the specified order:

a) preparation of the incubation channel according to the invention comprising the test strip,
b) addition of sample material to a liquid, preferably an aqueous solution, in the blot tray, so that it comes into contact with the test strip,
c) incubation of the test strip in the presence of the sample materials,
d) removal of the sample materials,
e) washing of the test strip,
f) addition of at least one chemical reagent and incubation with the test strip from step d),
g) optional repetition, at least once, of step f) with the same or another chemical reagent,
h) optional washing of the test strip,
i) optional removal of the test strip,
j) optional analysis of the test strip,
k) optional drying, and if applicable, archiving of the test strip.

In the following, the invention is explained by means of practical examples with reference to the figures. The described embodiments are in every respect merely examples and are not to be understood as limiting, and various combinations of the characteristics given are included in the scope of the invention.

Fig. 1a shows a top view of an incubation channel (1) according to the invention with longitudinal walls ((3) and (2), the latter not visible under the supporting frame (6)) and a recess (4), in which

a test strip (14) with reagent (15) is positioned on the base (5), said strip being fixed in place by means of holding elements (16). The one longitudinal side has a supporting frame (6), the other a frame notch (8) on a suitable supporting frame. Also shown are the protruding (9) and receiving (10) elements of the fastening means.

As seen from the side in **Fig. 1b**, each of the longitudinal ends has a head (11) with a protruding (9) and a receiving element (10). The head is connected to the other components of the incubation tray via a connecting element (12), which has a hollow (13) underneath.

Fig. 2a shows an assembly of three identical incubation trays according to the invention as shown in **Fig. 1a**. The assembly is fixed in place by a supporting frame (6) which fits into the frame notch (8) and by the protruding element (9) inserted and engaged in the receiving element (10).

Fig. 2b shows a sectional view of how the supporting frame (6) is adapted to the frame notch (8) of the adjacent incubation tray in the assembly in such a manner that the gap between them is closed and sealed against possible spraying of liquid, particularly in conically shaped incubation channels.

Fig. 2c shows a sectional view of how the protruding element (9) and the receiving element (10) are engaged in the assembly.

Fig. 3 shows various embodiments according to the invention of the holding element (6), starting from the incubation channel in **Fig. 3a**, which corresponds to the incubation channel in **Fig. 1a**. Characteristic of all holding elements according to the invention is the projecting element (20) projecting from or in the direction of the longitudinal wall, under which a notch (21) is located. The projecting element limits in a vertical direction the position of a test strip (14) inserted beneath it with a reagent (15) via a pair of constituent holding elements on opposite longitudinal sides of the incubation channel. In this manner, the test strip is kept at a maximum height on the base, which corresponds to the lower edge of the projecting element. Its position in a horizontal direction is limited by the shape of the notch (21) of the holding elements.

Figs. 3b1), **3c1)**, **3d1)**, **3e1)** and **3f1)** or **3b2)**, **3c2)**, **3d2)**, **3e2)** and **3f2)** show in section along the longitudinal axis or transverse axis of the incubation channel various variants of the holding element, specifically vertically bevelled projecting elements (**3c1)** and **3c2)**), vertically rounded off projecting elements (**3d1)** and **3d2)**), holding elements in which the notch along the transverse axis of the incubation channel ends before the longitudinal wall (**3b2)**, **3c2),** and **3d2**)) and, in contrast to the latter holding elements, in which the notch extends up to the longitudinal wall (**3e2)** and **3f2)**). In the latter case, the position of the test strip in a horizontal direction is exclusively limited by the two longitudinal walls. **Figs. 3f1)** and **3f2)** show holding elements configured in the form of shafts.

Fig. 4 shows various possibilities for arranging two holding elements on opposite longitudinal sides in pairs by means of an incubation channel viewed from above, wherein **Figs. 4a)**, **4b)** and **4c)** are views of the variants shown in **Figs. 1a** and **3a** shown enlarged (**Fig. 4a)**) with two possible variants (**4b)** and **4c)**). In **Fig. 4a),** the two holding elements of the pair are configured along the two longitudinal sides at the same height of the longitudinal axis of the incubation channel. In **Fig. 4b),** the two holding elements of the pair are arranged on the two longitudinal sides diagonally offset with respect to each other along the longitudinal axis of the incubation channel. Solely as an illustrative comparison, **Fig. 4c)** shows a variant not according to the invention, in which the two holding elements are arranged on the two longitudinal sides at the same height of the longitudinal axis of the incubation channel and are connected in the form of a clasp, so that they cover the test strip.

Fig. 5 shows various possibilities for configuring the fastening means with a protruding element (9) and a receiving element (10). **Fig. 5a)** shows the connection referred to as a dovetail connection. **Fig. 5b)** shows the dovetail connection with a straightened edge. **Fig. 5c)** shows a fastening means with a stamp-shaped protruding element. **Fig. 5d)** shows a fastening means, in which the protruding element is configured as a circular shape or three-dimensionally in the form of a ball joint.

Fig. 6 clarifies the possibility of inserting the holding elements in the form of holding element frames (18) into the incubation channel, which is optionally positioned on one or more than one of the feet of the holding frame (19). Shown are a top view of the incubation channel together with the holding element frame **(Fig. 6a)**), the holding element frame alone in the same view (**Fig. 6b)**), the holding element frame in section along the longitudinal axis of the incubation channel (**Fig. 6c)**), and various sections of the holding frame of the incubation channel, more specifically at a location with a holding element **(Fig. 6d1)**), without a holding element **(Fig. 6d2)**), and on the longitudinal end by means of the foot of the holding element **(Fig. 6d3)**).

List of reference signs

1	Elongated incubation channels
2 and 3	Longitudinal walls
4	Recess
5	Base
6	Supporting frame
7	Additional incubation channels
8	Frame notch
9	Protruding element
10	Receiving element
11	Head
12	Connecting element
13	Hollow
14	Test strip
15	Reagent
16	Holding element
17	Assembly
18	Holding element frame
19	Foot of holding element frame
20	Projecting element
21	Notch

Claims

1. An elongated incubation channel with two opposite longitudinal walls, a recess, and a base,

equipped with an elongated test strip with a rear surface and a front surface,

wherein the test strip has its rear surface facing the base of the incubation channel and is coated on its front surface with at least one analytical reagent coated,

further having a fastening means, by means of which the incubation channel is configured to be connected to at least one additional incubation channel to form an assembly of incubation channels,

wherein a horizontal outward supporting frame is installed on one of the longitudinal walls,

at least two holding elements for fixation of the test strip, wherein the incubation channel and the holding elements are produced as one piece with the holding elements protruding directly from the longitudinal walls of the incubation channel,

and wherein the longitudinal wall with the outward supporting frame, the supporting frame itself, and the other longitudinal wall are adapted to one another in such a manner that the supporting frame of the incubation channel in the assembly lies on the other longitudinal wall of an additional incubation channel.

2. The incubation channel according to claim 1, wherein the supporting frame does not cover the recess.

3. The incubation channel according to any of claims 1 to 2, wherein the supporting frame extends along the longitudinal axis of the incubation channel at least as far as the recess.

4. The incubation channel according to claim 3, wherein a frame notch is located on the other longitudinal wall in the form of the supporting frame lying thereon in the assembly.

5. The incubation channel according to any of claims 1 to 4, wherein the end of the supporting frame along the transverse axis is measured in such a way that it connects to the longitudinal wall of the additional incubation tray and forms a vertical extension thereof.

6. The incubation channel according to any of claims 1 to 5, wherein, the fastening means comprises at least one unit with a protruding element on the one longitudinal side of the incubation channel and a receiving element on the other longitudinal side of the incubation channel.

7. The incubation channel according to claim 6, wherein the protruding element of the fastening means is on the same longitudinal side of the incubation channel as the supporting frame.

8. The incubation channel according to any of claims 1 to 7, wherein the fastening means allows a connection between the incubation channel and the additional incubation channel that is capable of being connected and disconnected multiple times.

9. The incubation channel according to any of claims 1 to 8, wherein a fastening means is configured at each end of the incubation channel with a protruding element on the one longitudinal side and a receiving element adapted thereto on the other longitudinal side.

10. The incubation channel according to any of claims 1 to 9, wherein the recess does not extend over the entire length of the incubation channel, but extensions are located at the two longitudinal ends of the incubation channel, each of which houses one unit of the fastening means.

11. The incubation channel according to claim 10, wherein each extension has a head that is connected via a connecting element with the recess,

wherein the connecting element is configured vertically at the level of the supporting frame, giving rise to a hollow that is arranged below it perpendicular to the longitudinal axis of the incubation channel.

12. The incubation channel according to any of claims 6 to 11, wherein the fastening means comprises a protruding element on the one longitudinal side and a receiving element adapted thereto on the other longitudinal side, wherein

the protruding element and the longitudinal wall with the supporting frame are configured on the one longitudinal side of the incubation channel and

the receiving element and the other longitudinal wall are configured on the other longitudinal side of the incubation channel

and they are adapted to one another such that the position of at least two identical incubation channels in the assembly is fixed both by engagement of the protruding elements with the receiving element by the supporting frame lying on the frame notch of the other longitudinal wall.

13. The incubation channel according to any of claims 9 to 12, wherein the fastening means comprises a protruding element on the one longitudinal side and a receiving element adapted thereto on the other longitudinal side, wherein

the receiving element of the fastening means is open upwards and in the direction of the outer side of the longitudinal frame and

is configured in such a way that the protruding element is inserted from above into the receiving element until the former rests against the base of the latter.

14. The incubation channel according to any of claims 9 to 13, wherein the fastening means comprises a protruding element on the one longitudinal side and a receiving element adapted thereto on the other longitudinal side,

and wherein the protruding element and the receiving element are adapted to each other in such a manner that on connection, the former engages with the latter with an audible click.

Abstract

The present invention relates to an elongated incubation channel with two opposite longitudinal walls, a recess, and a base, that can be equipped with an elongated test strip with a rear surface and a front surface, wherein the test strip has its rear surface facing the base of the incubation channel and is coated on its front surface with at least one analytical reagent coated, further having a fastening means, by means of which the incubation channel can be connected to at least one additional incubation channel to form an assembly of incubation channels, wherein a preferably horizontal outward supporting frame is installed on one of the longitudinal walls.

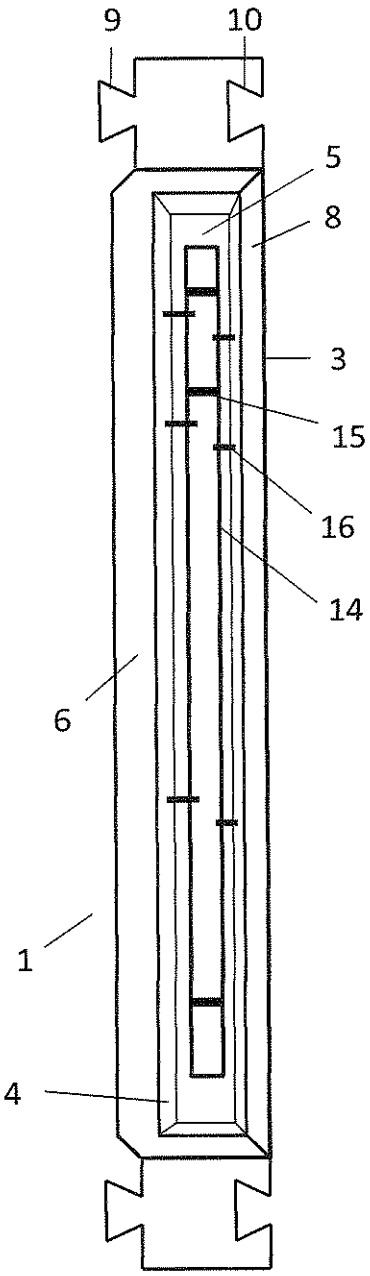

Fig. 1a

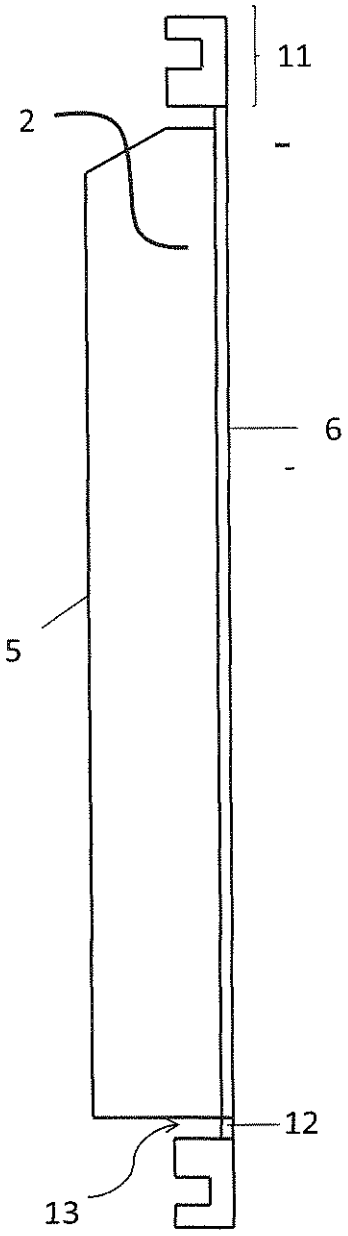

Fig. 1b

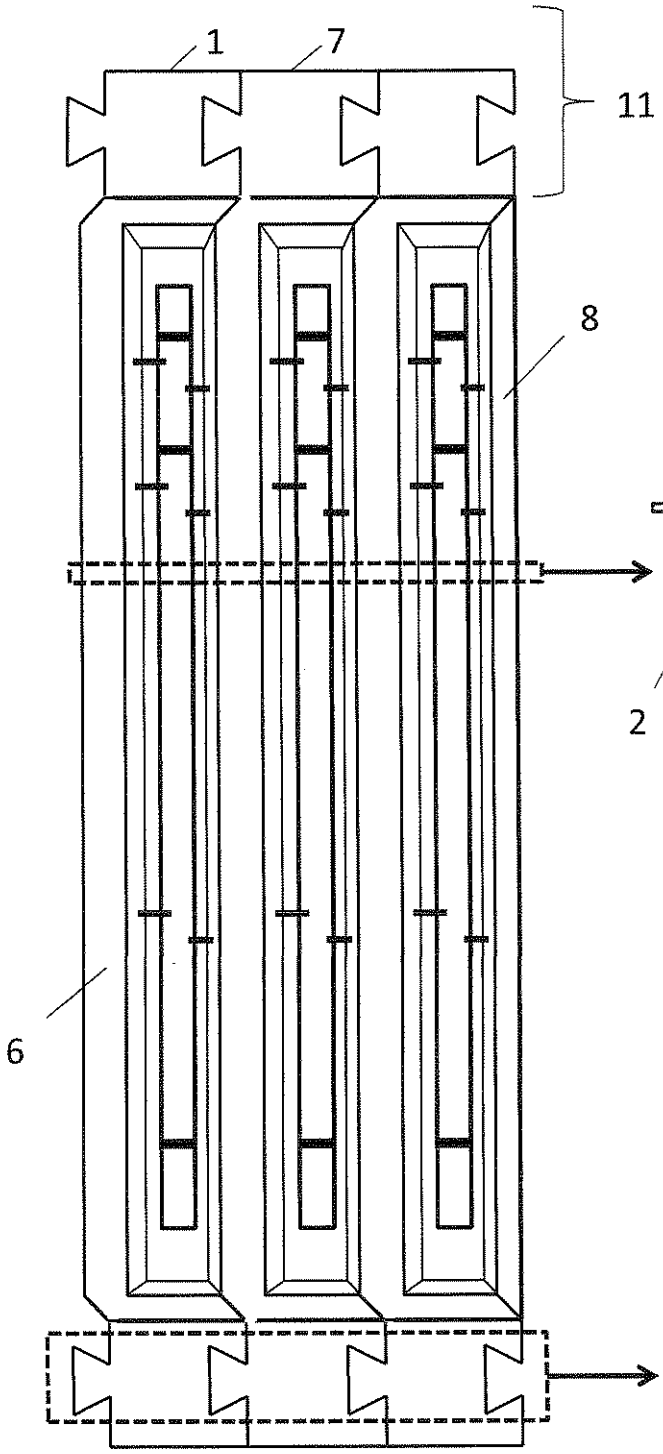

Fig. 2a

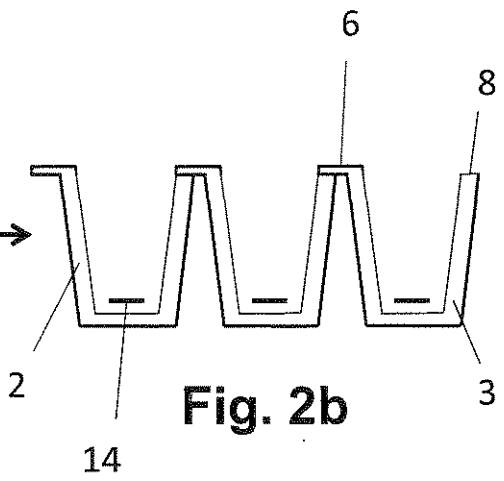

Fig. 2b

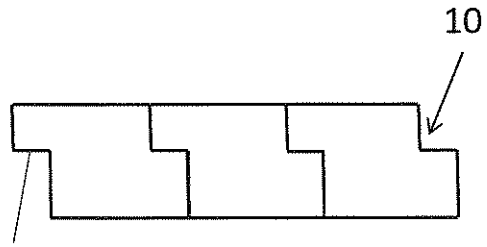

Fig. 2c

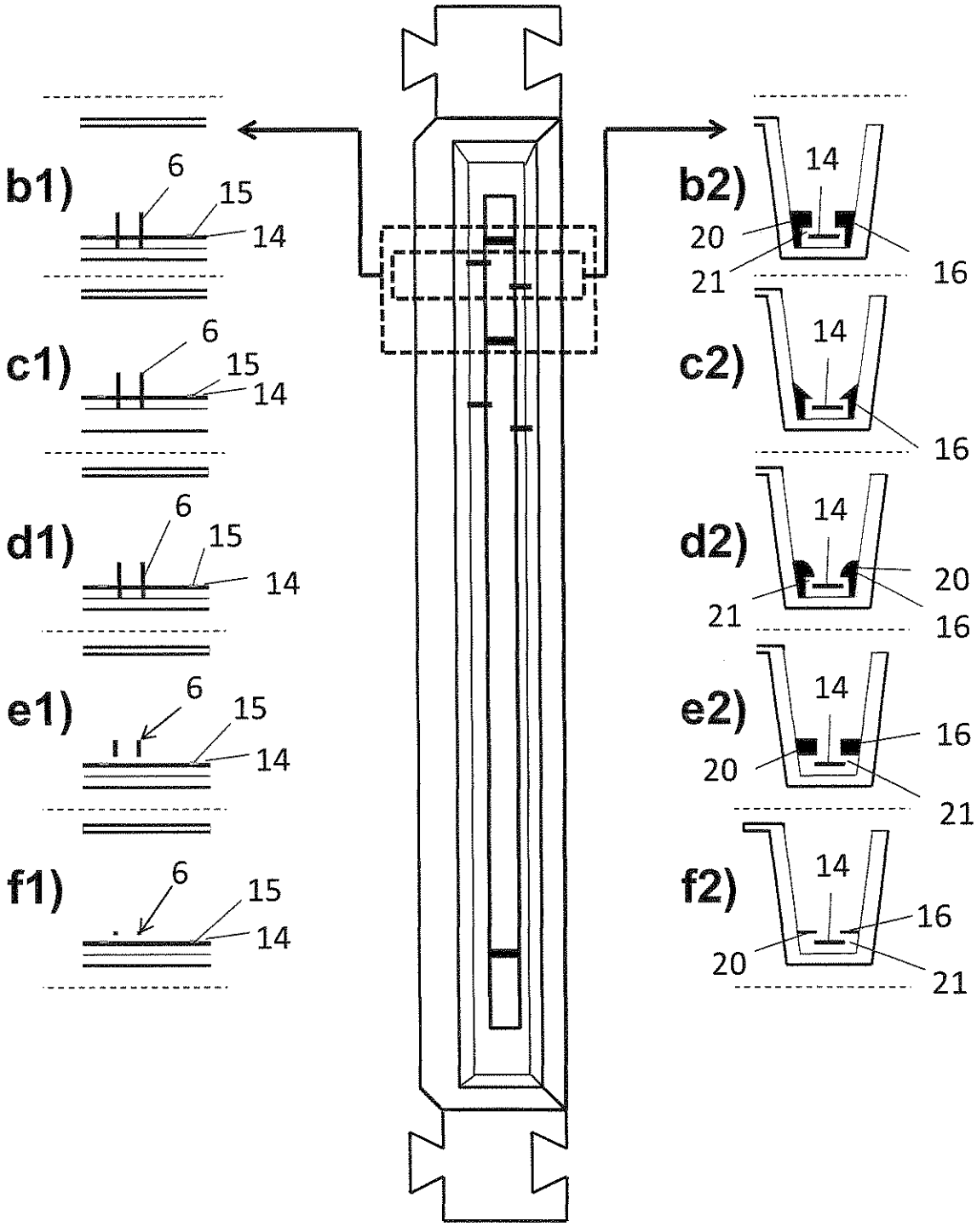
b1)
6
15
14
c1)
6
15
14
d1)
6
15
14
e1)
6
15
14
f1)
6
15
14
b2)
14
20
21
16
c2)
14
16
d2)
14
20
21
16
e2)
14
16
20
21
f2)
14
16
20
21

Fig. 3a

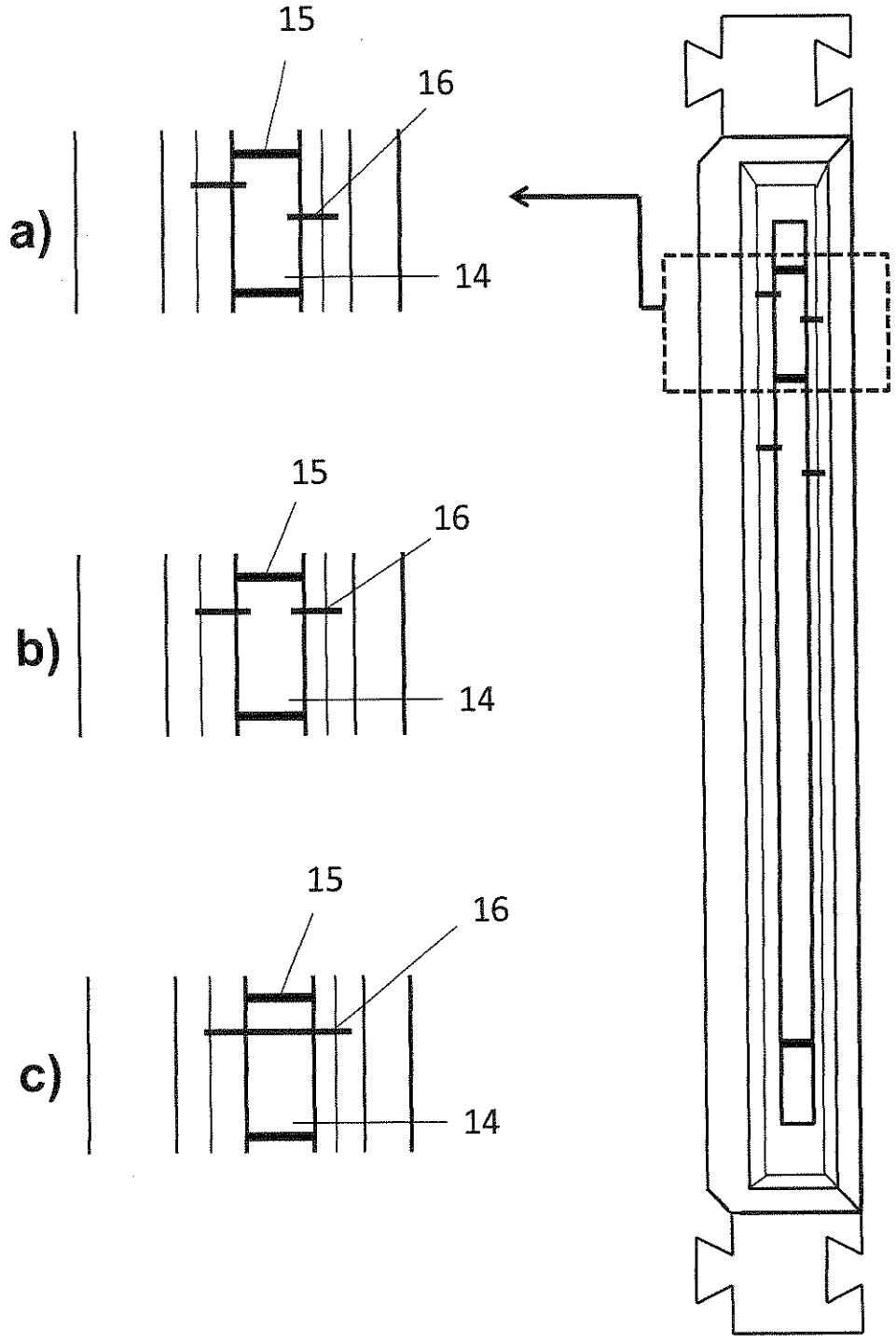

Fig. 4

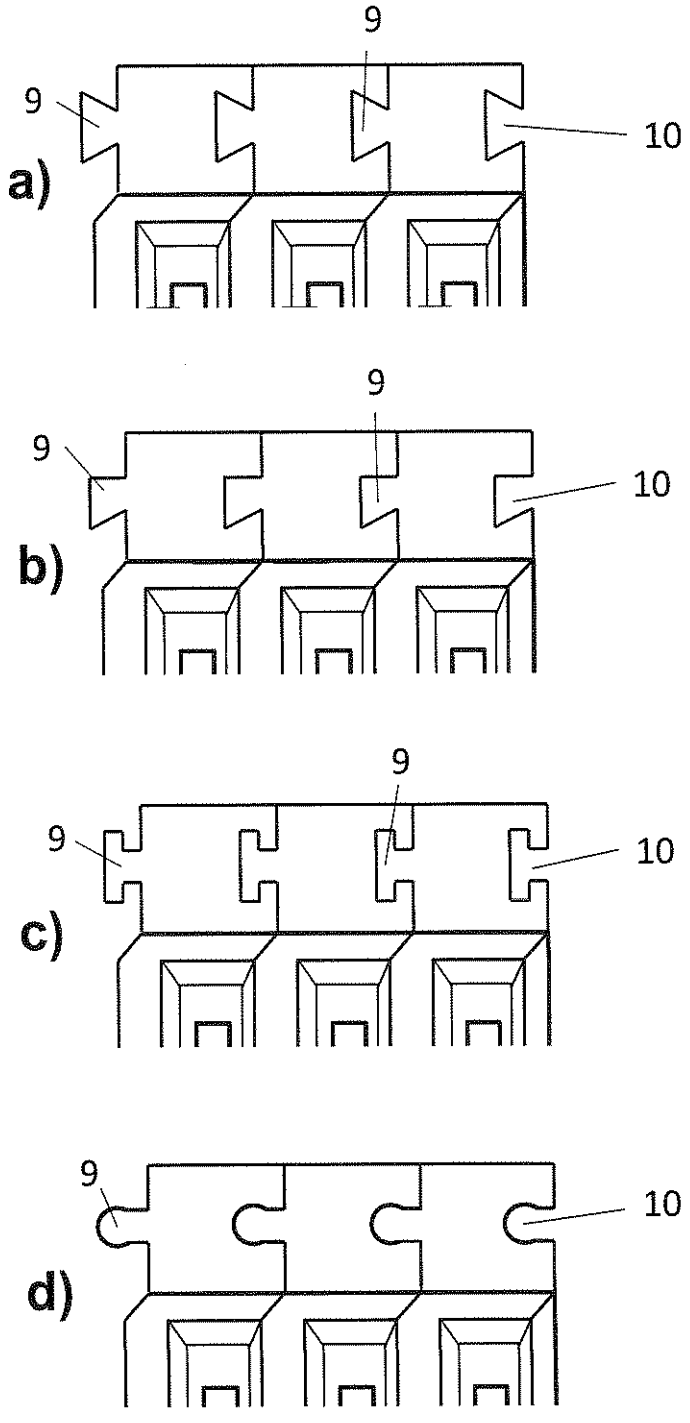

Fig. 5

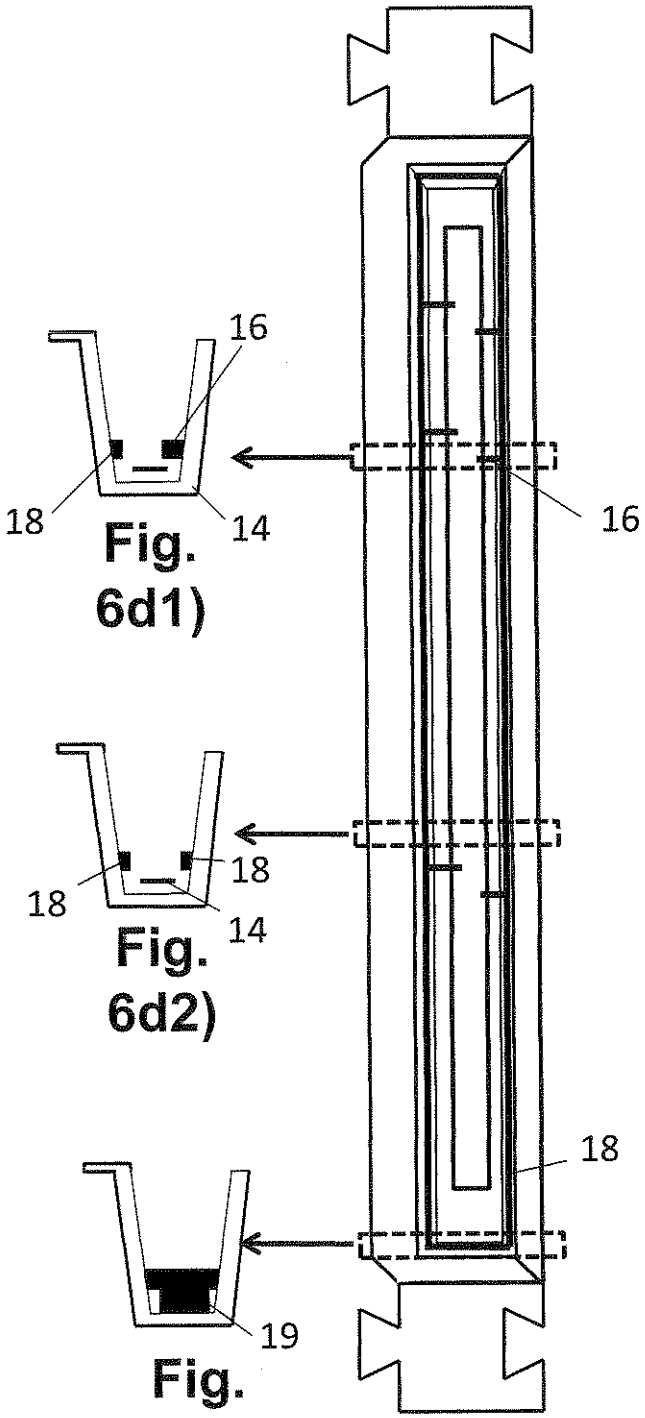

Fig. 6d1)

Fig. 6d2)

Fig. 6d3)

Fig. 6a

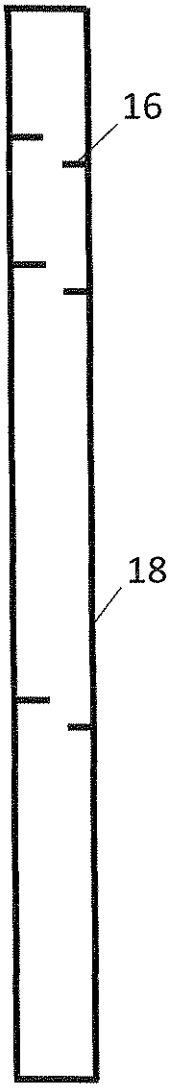

Fig. 6b

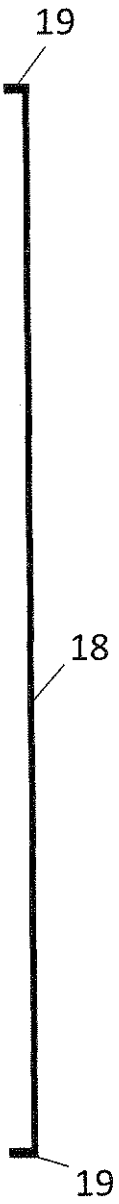

Fig. 6c