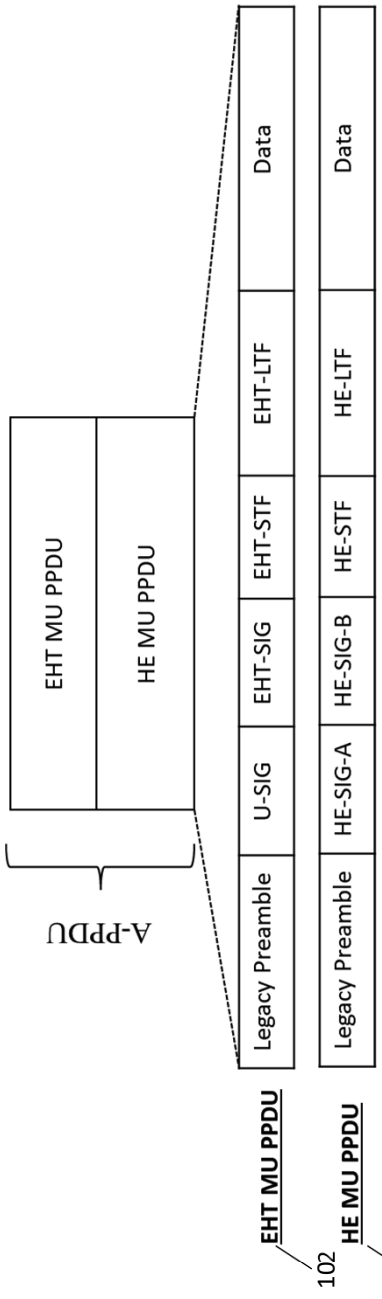
A-PPDU
EHT MU PPDU
HE MU PPDU
Legacy Preamble
U-SIG
EHT-SIG
EHT-STF
EHT-LTF
Data
Legacy Preamble
HE-SIG-A
HE-SIG-B
HE-STF
HE-LTF
Data
EHT MU PPDU
HE MU PPDU
102
104
100

Figure 1

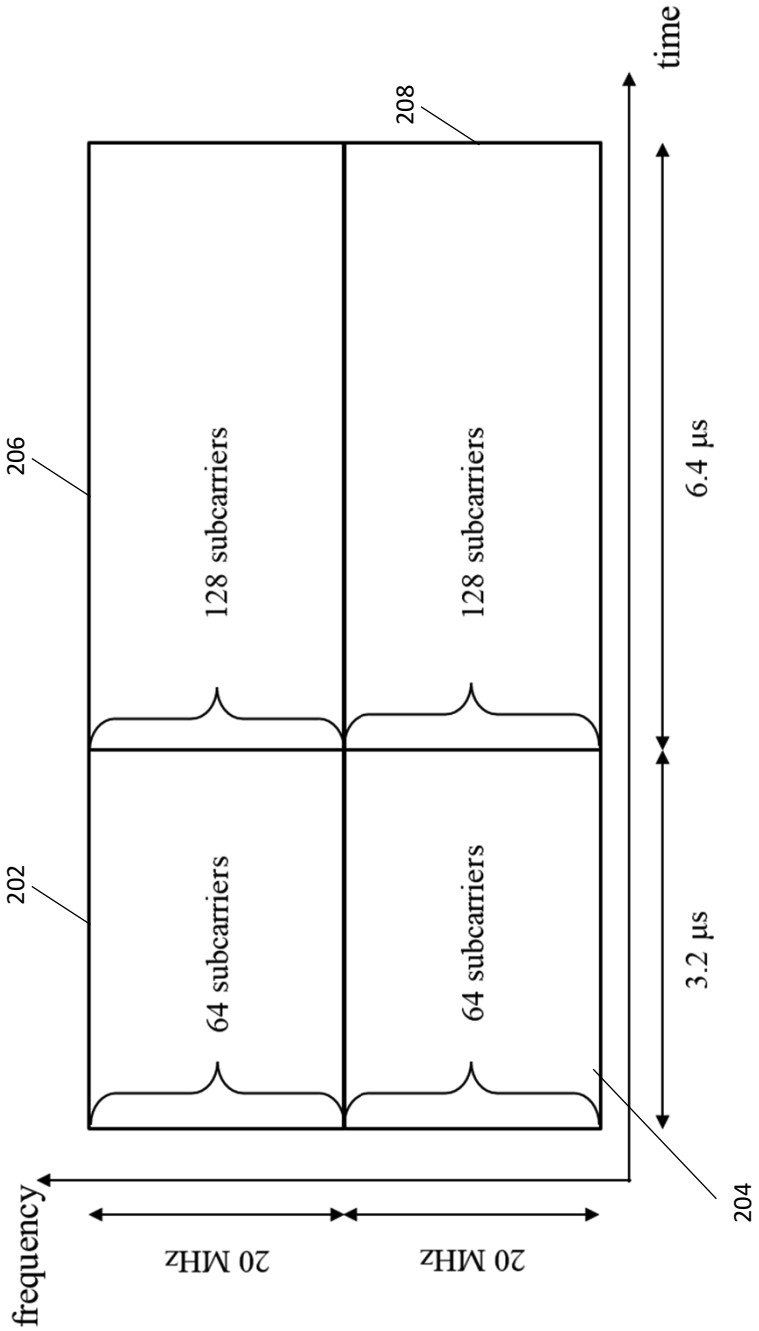
time
208
206
128 subcarriers
128 subcarriers
6.4 µs
202
64 subcarriers
64 subcarriers
3.2 µs
204
frequency
20 MHz
20 MHz
200

Figure 2

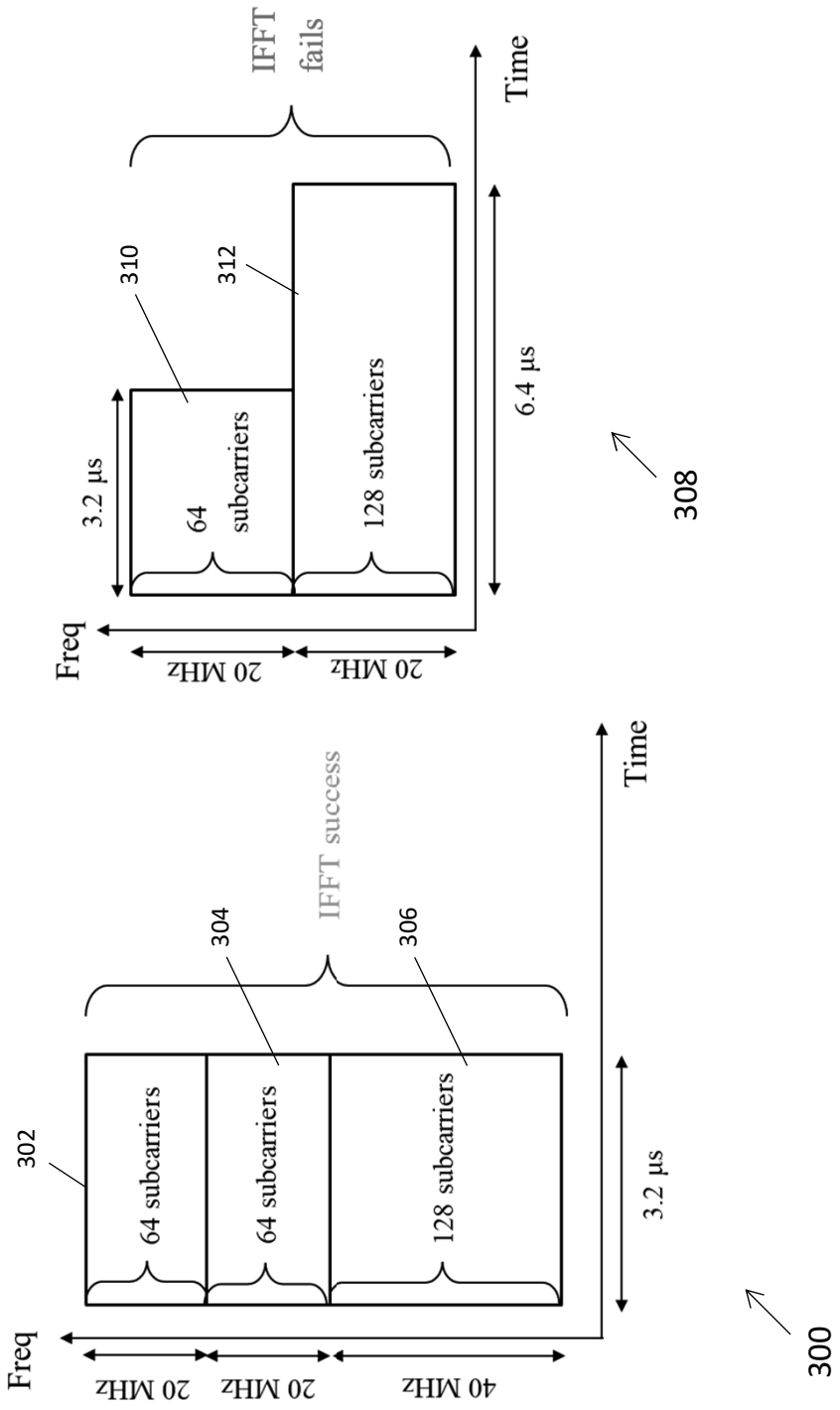
IFFT fails
Time
310
312
3.2 µs
64 subcarriers
128 subcarriers
6.4 µs
Freq
20 MHz
20 MHz
308
IFFT success
Time
304
306
302
64 subcarriers
64 subcarriers
128 subcarriers
3.2 µs
Freq
20 MHz
20 MHz
40 MHz
300

Figure 3

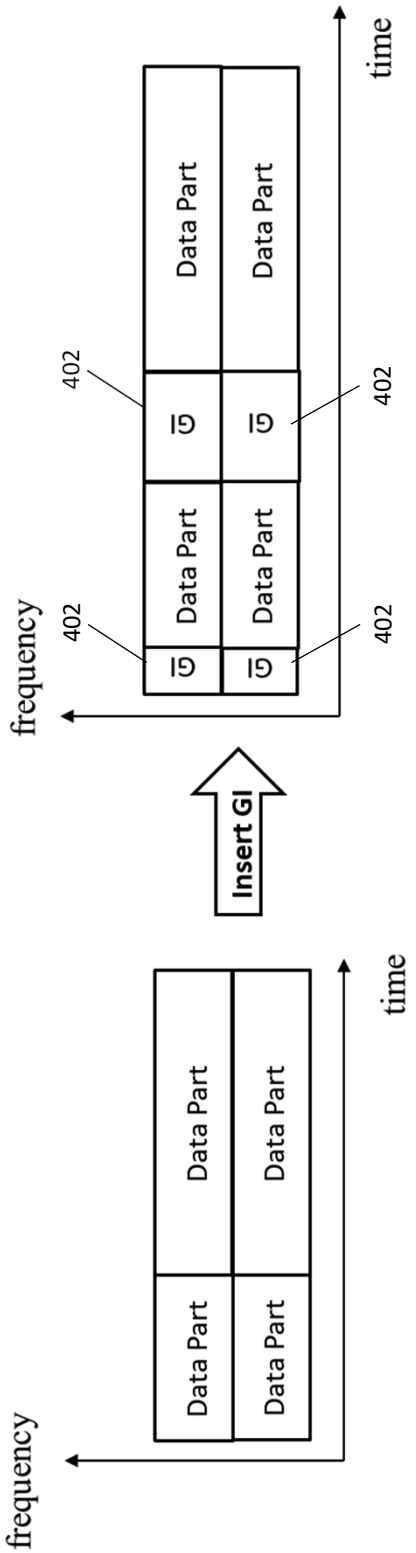
frequency
time
Data Part
Data Part
Data Part
Data Part
Insert GI
frequency
time
Data Part
Data Part
Data Part
Data Part
GI
GI
GI
GI
402
402
402
402
400

Figure 4

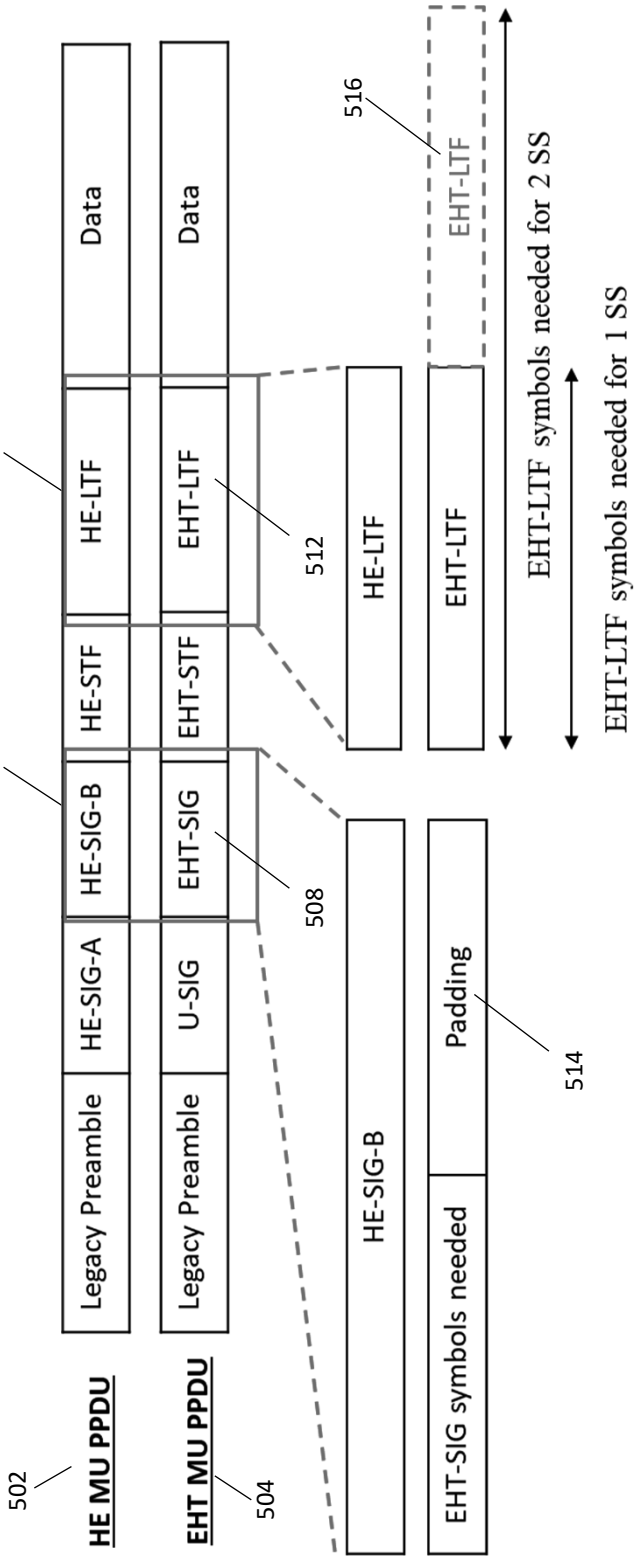
HE MU PPDU
EHT MU PPDU
Legacy Preamble
HE-SIG-A
HE-SIG-B
HE-STF
HE-LTF
Data
Legacy Preamble
U-SIG
EHT-SIG
EHT-STF
EHT-LTF
Data
HE-SIG-B
EHT-SIG symbols needed
Padding
HE-LTF
EHT-LTF
EHT-LTF
EHT-LTF symbols needed for 2 SS
EHT-LTF symbols needed for 1 SS
502
504
506
508
510
512
514
516
500

Figure 5

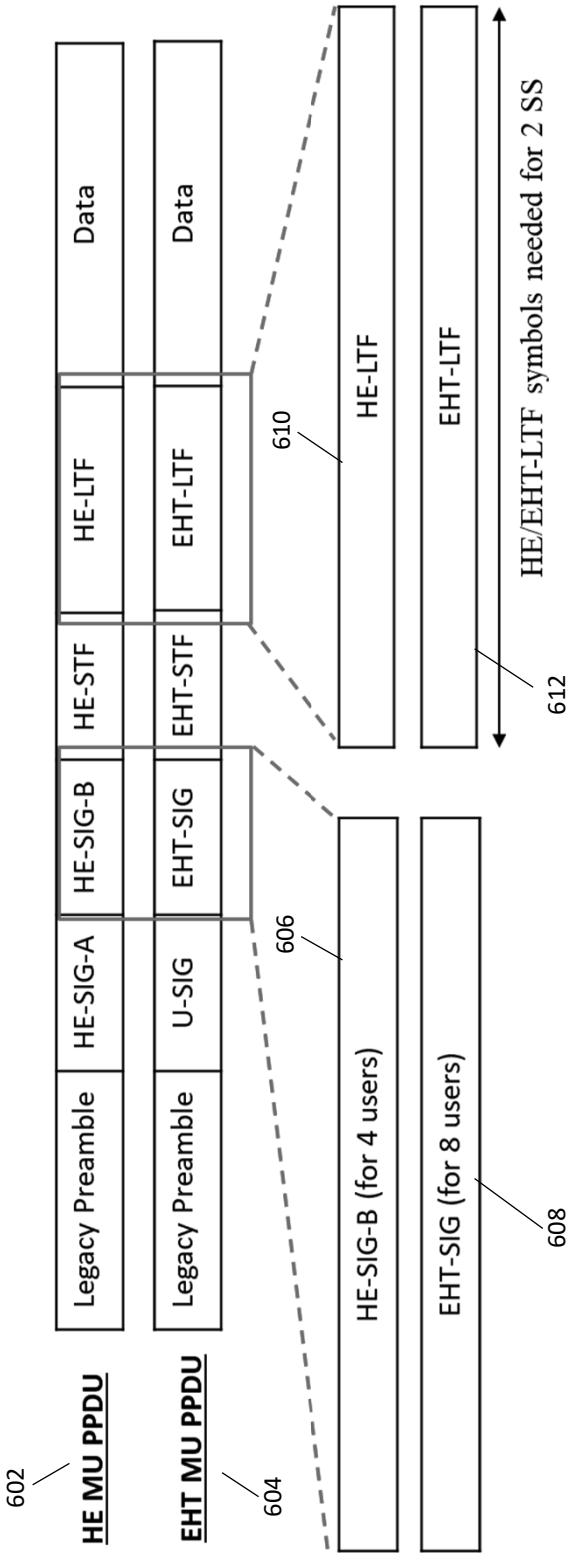
HE MU PPDU
602
Legacy Preamble
HE-SIG-A
HE-SIG-B
HE-STF
HE-LTF
Data
EHT MU PPDU
604
Legacy Preamble
U-SIG
EHT-SIG
EHT-STF
EHT-LTF
Data
606
HE-SIG-B (for 4 users)
608
EHT-SIG (for 8 users)
610
HE-LTF
EHT-LTF
612
HE/EHT-LTF symbols needed for 2 SS
600

Figure 6

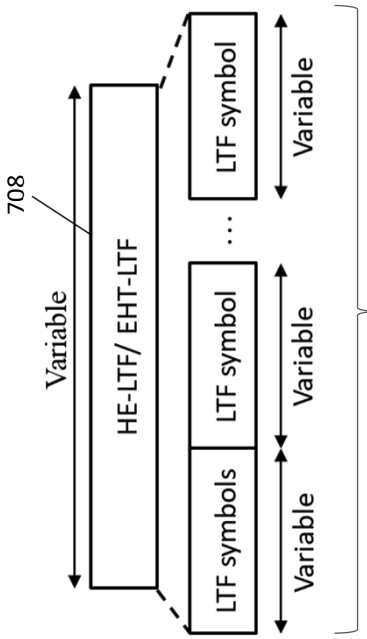

Figure 7B

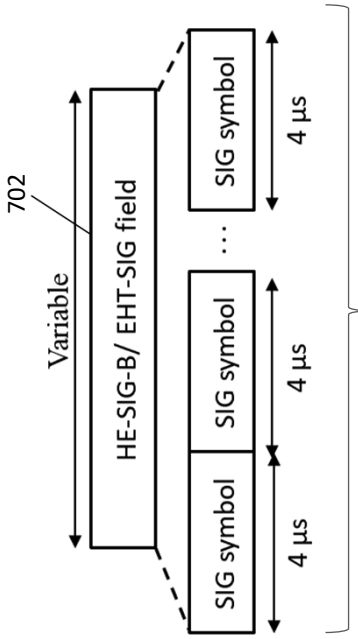

Figure 7A

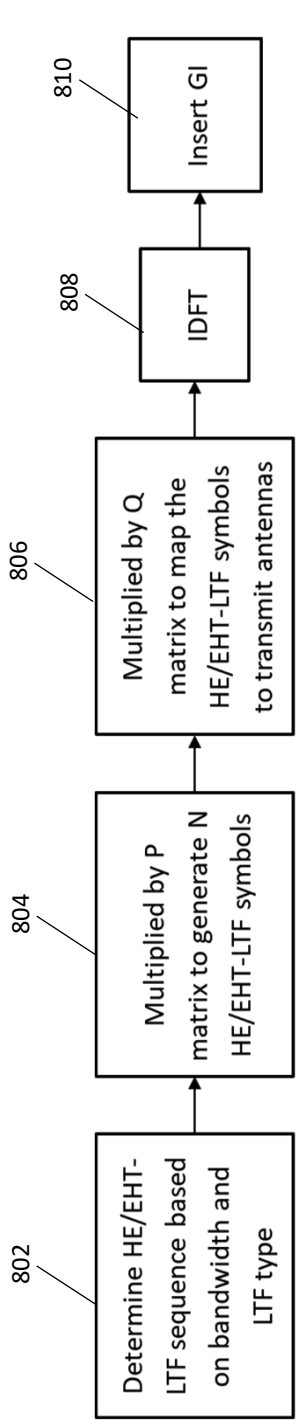

Figure 8A

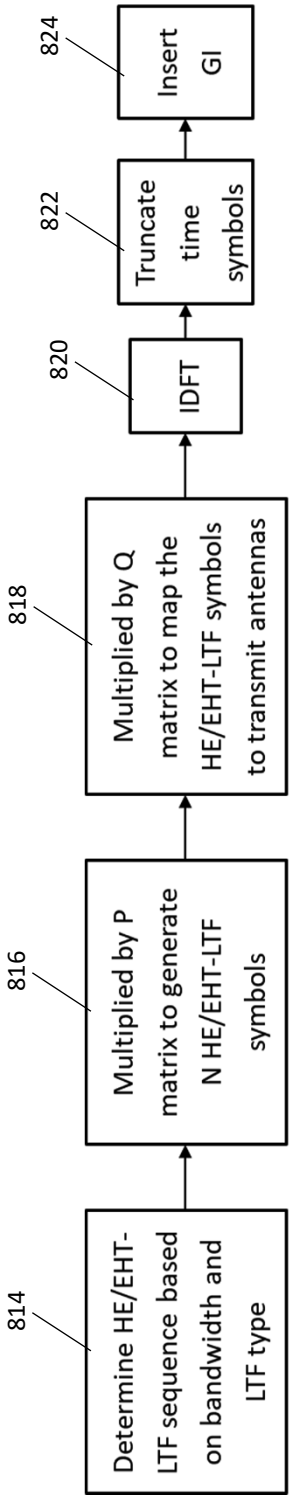

Figure 8B

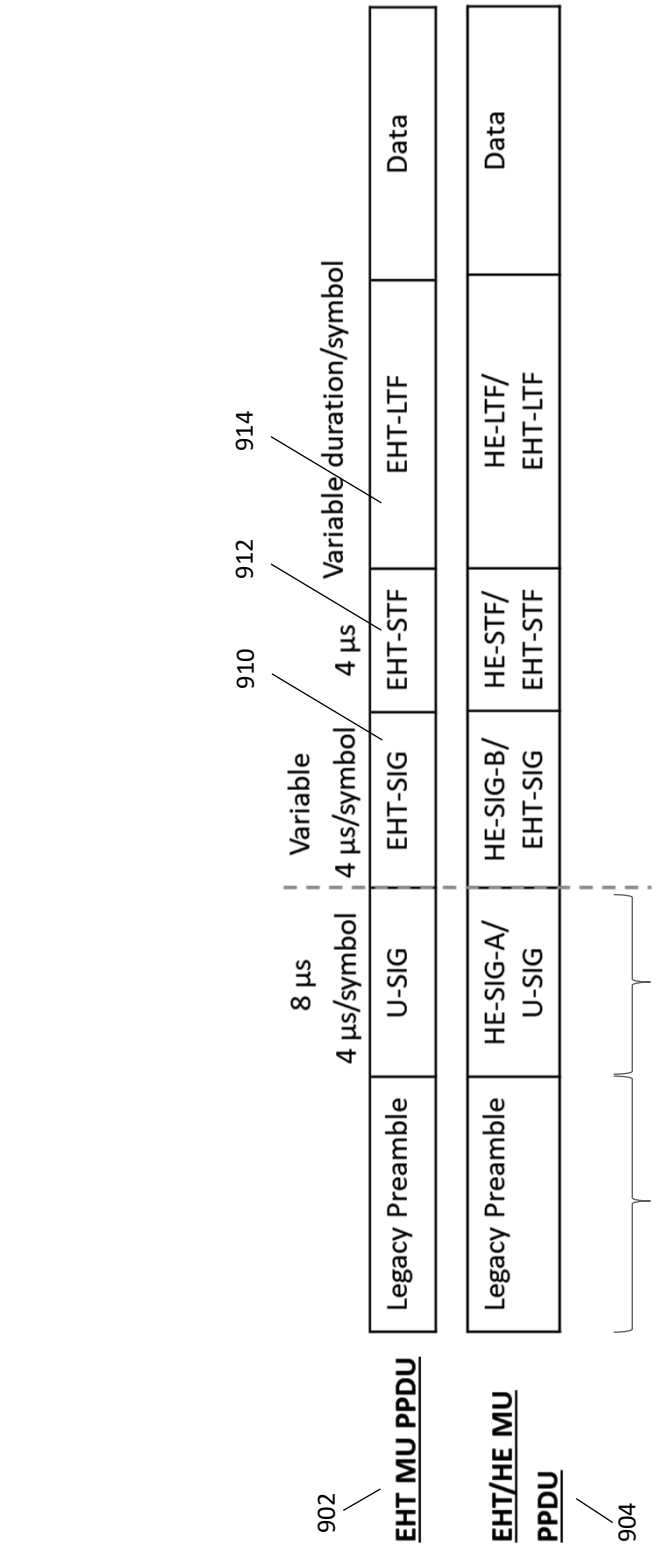
902
EHT MU PPDU
904
EHT/HE MU PPDU
Legacy Preamble
U-SIG
HE-SIG-A/ U-SIG
8 µs
4 µs/symbol
906
Variable
4 µs/symbol
EHT-SIG
HE-SIG-B/ EHT-SIG
910
908
4 µs
EHT-STF
HE-STF/ EHT-STF
912
Variable duration/symbol
EHT-LTF
HE-LTF/ EHT-LTF
914
Data
Data
900

Figure 9

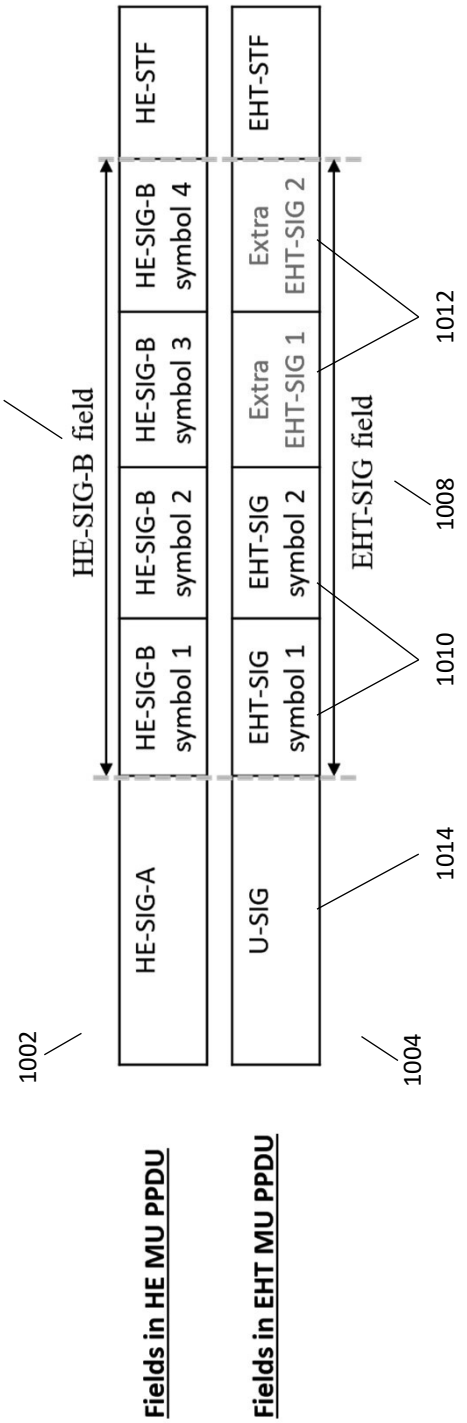
HE-SIG-A
HE-SIG-B symbol 1
HE-SIG-B symbol 2
HE-SIG-B symbol 3
HE-SIG-B symbol 4
HE-STF
U-SIG
EHT-SIG symbol 1
EHT-SIG symbol 2
Extra EHT-SIG 1
Extra EHT-SIG 2
EHT-STF
HE-SIG-B field
EHT-SIG field
1002
1004
1006
1008
1010
1012
1014
Fields in HE MU PPDU
Fields in EHT MU PPDU
1000

Figure 10

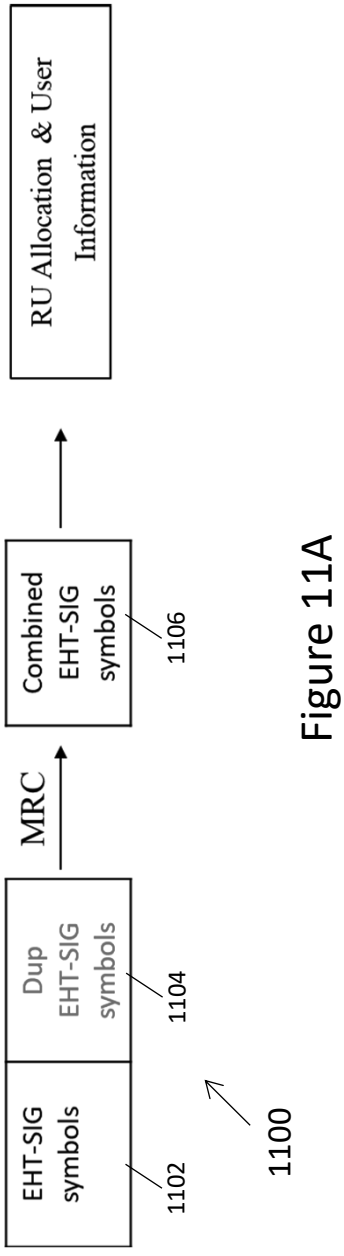

Figure 11A

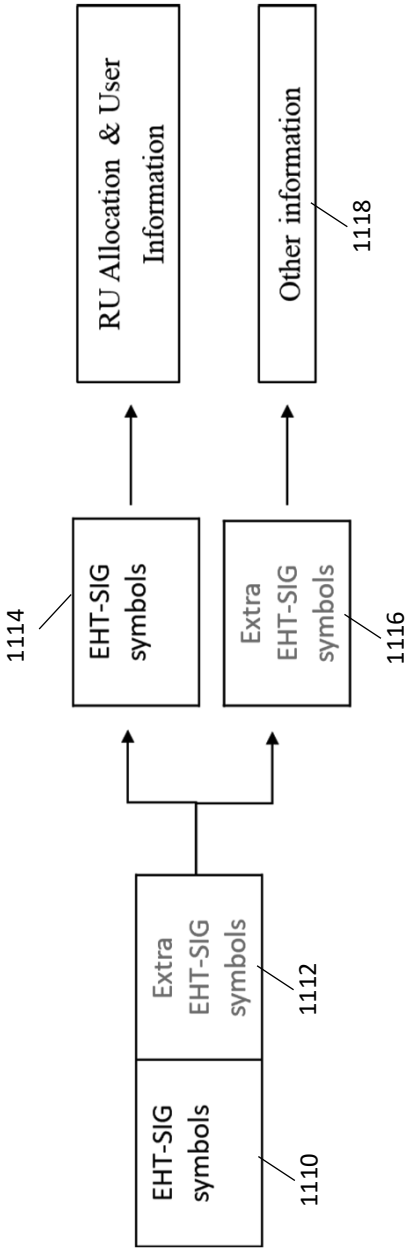

Figure 11B

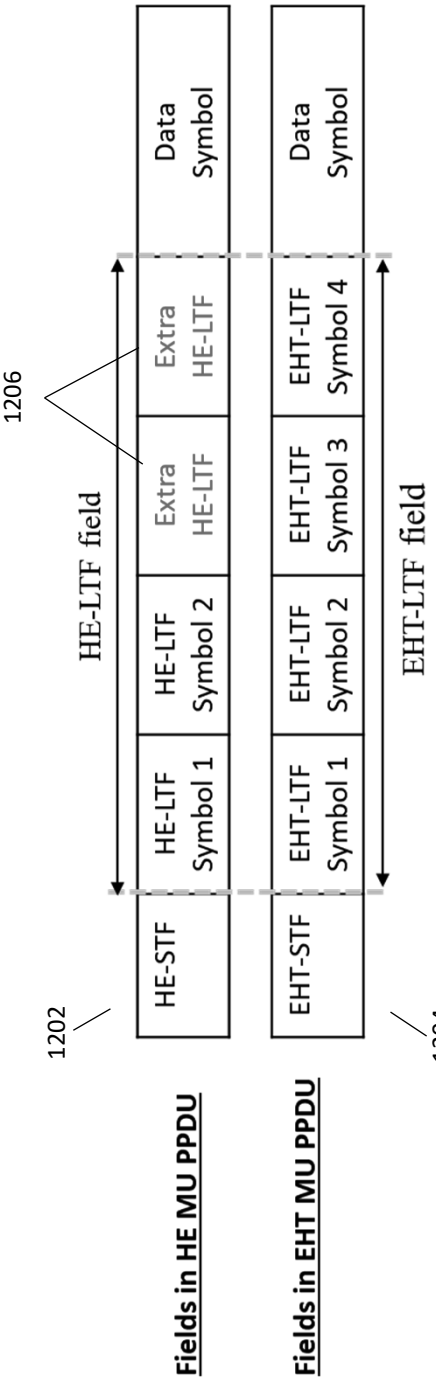
HE-STF
HE-LTF Symbol 1
HE-LTF Symbol 2
Extra HE-LTF
Extra HE-LTF
Data Symbol
HE-LTF field
1206
1202
Fields in HE MU PPDU
EHT-STF
EHT-LTF Symbol 1
EHT-LTF Symbol 2
EHT-LTF Symbol 3
EHT-LTF Symbol 4
Data Symbol
EHT-LTF field
1204
Fields in EHT MU PPDU
1200

Figure 12

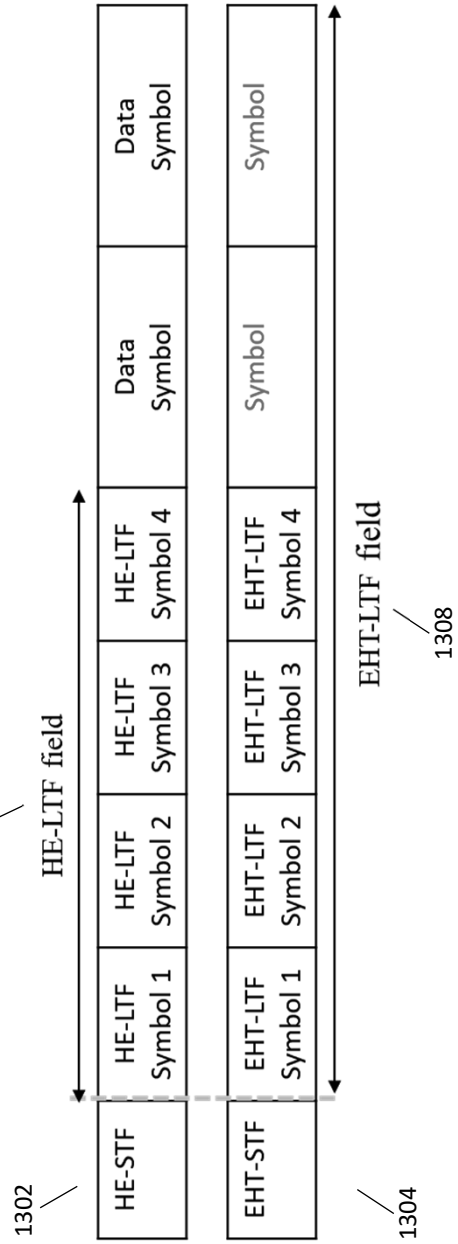
1306
HE-LTF field
1302
HE-STF
HE-LTF Symbol 1
HE-LTF Symbol 2
HE-LTF Symbol 3
HE-LTF Symbol 4
Data Symbol
Fields in HE MU PPDU
1304
EHT-STF
EHT-LTF Symbol 1
EHT-LTF Symbol 2
EHT-LTF Symbol 3
EHT-LTF Symbol 4
Symbol
Symbol
Fields in EHT MU PPDU
EHT-LTF field
1308
1300

Figure 13

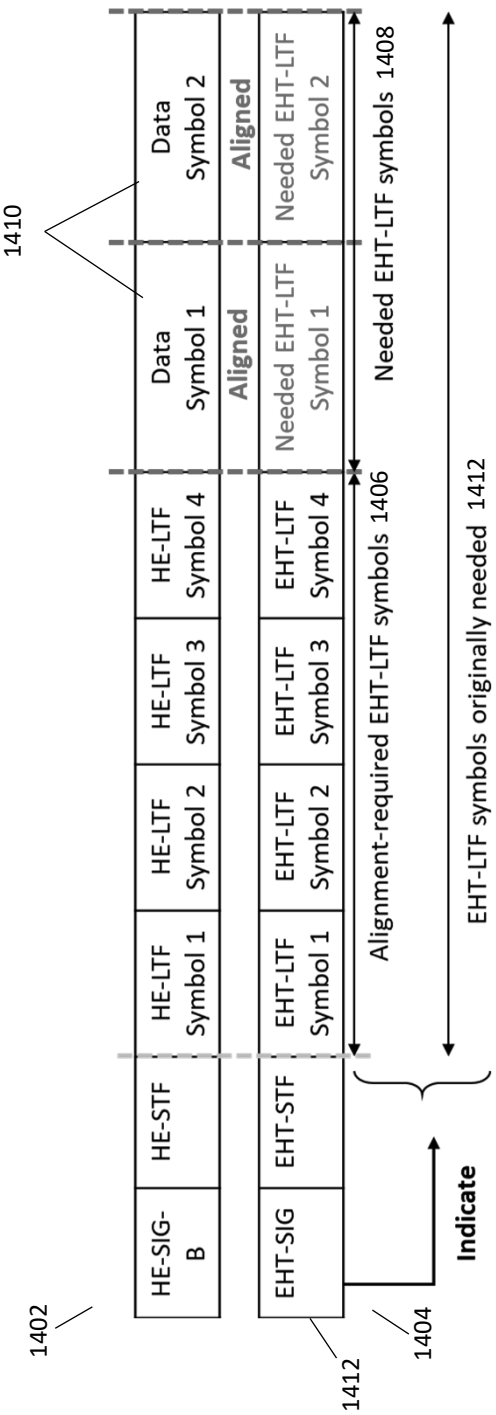
1410
HE-SIG-B
HE-STF
HE-LTF Symbol 1
HE-LTF Symbol 2
HE-LTF Symbol 3
HE-LTF Symbol 4
Data Symbol 1
Data Symbol 2
EHT-SIG
EHT-STF
EHT-LTF Symbol 1
EHT-LTF Symbol 2
EHT-LTF Symbol 3
EHT-LTF Symbol 4
Aligned
Needed EHT-LTF Symbol 1
Aligned
Needed EHT-LTF Symbol 2
Alignment-required EHT-LTF symbols 1406
Needed EHT-LTF symbols 1408
EHT-LTF symbols originally needed 1412
Indicate
1402
1404
1412
1400

Figure 14

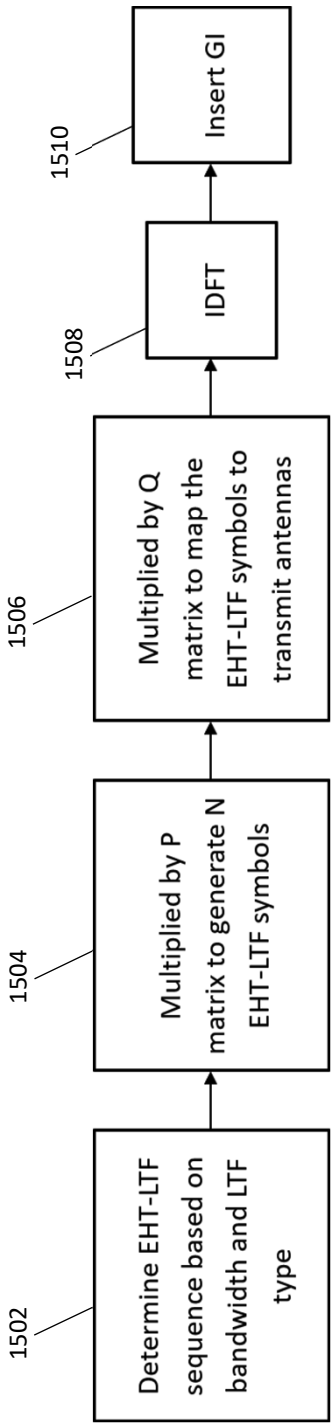
1502
Determine EHT-LTF sequence based on bandwidth and LTF type
1504
Multiplied by P matrix to generate N EHT-LTF symbols
1506
Multiplied by Q matrix to map the EHT-LTF symbols to transmit antennas
1508
IDFT
1510
Insert GI
1500

Figure 15

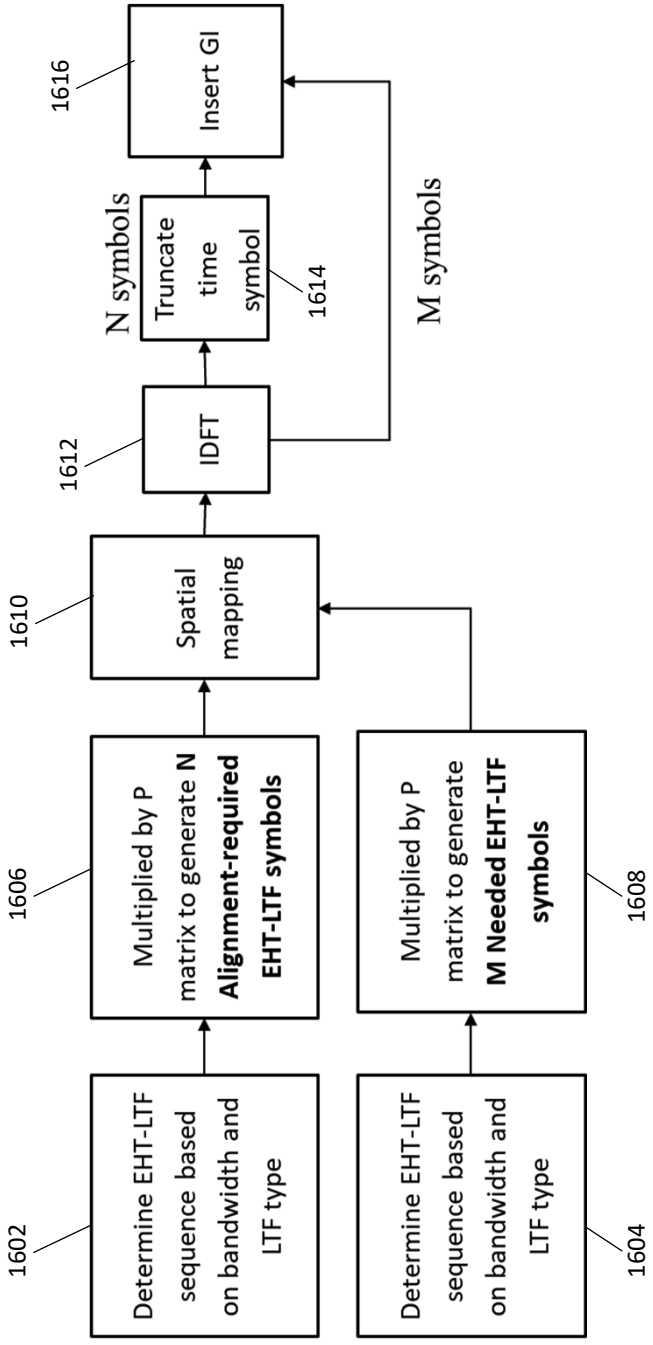
1602
Determine EHT-LTF sequence based on bandwidth and LTF type
1604
Determine EHT-LTF sequence based on bandwidth and LTF type
1606
Multiplied by P matrix to generate N Alignment-required EHT-LTF symbols
1608
Multiplied by P matrix to generate M Needed EHT-LTF symbols
1610
Spatial mapping
1612
IDFT
N symbols
1614
Truncate time symbol
M symbols
1616
Insert GI
1600

Figure 16

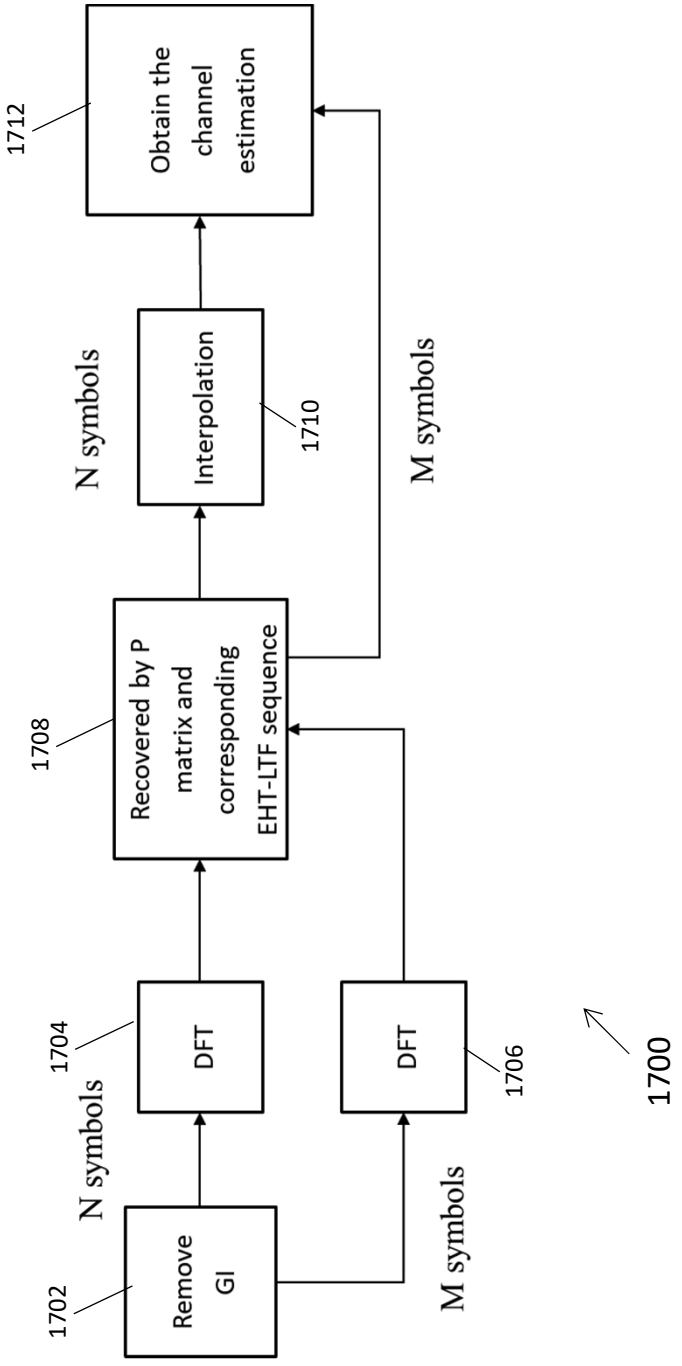
1712
Obtain the channel estimation
N symbols
Interpolation
1710
M symbols
1708
Recovered by P matrix and corresponding EHT-LTF sequence
1704
DFT
DFT
1706
N symbols
M symbols
1702
Remove GI
1700

Figure 17

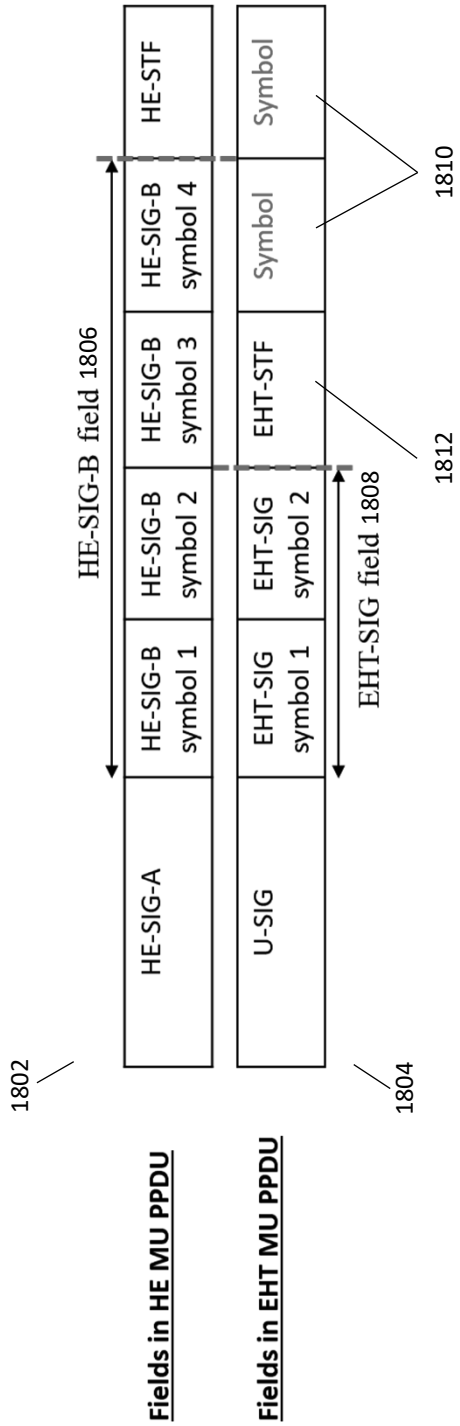
HE-SIG-A
HE-SIG-B symbol 1
HE-SIG-B symbol 2
HE-SIG-B symbol 3
HE-SIG-B symbol 4
HE-STF
HE-SIG-B field 1806
U-SIG
EHT-SIG symbol 1
EHT-SIG symbol 2
EHT-STF
Symbol
Symbol
EHT-SIG field 1808
1802
1804
1810
1812
Fields in HE MU PPDU
Fields in EHT MU PPDU
1800

Figure 18

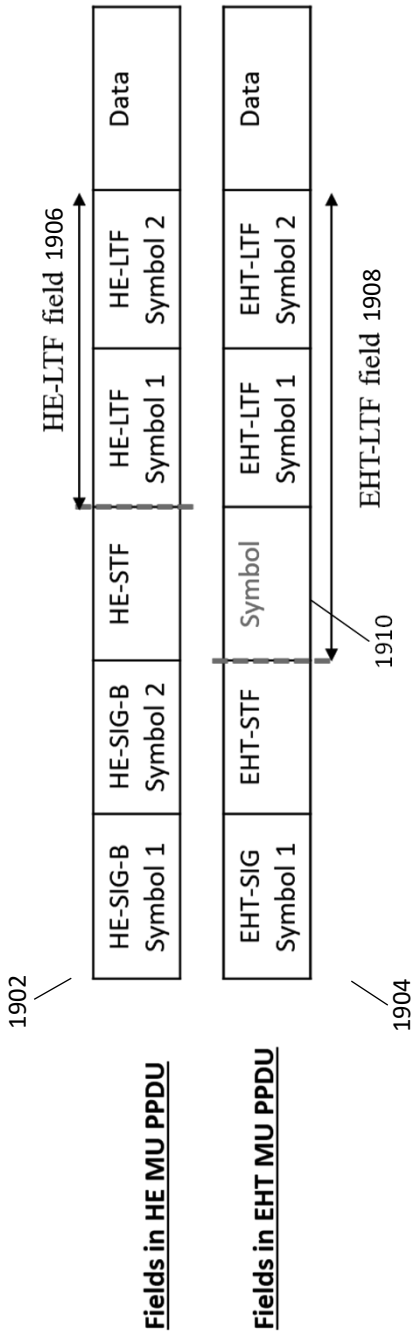
HE-LTF field 1906
HE-SIG-B Symbol 1
HE-SIG-B Symbol 2
HE-STF
HE-LTF Symbol 1
HE-LTF Symbol 2
Data
EHT-SIG Symbol 1
EHT-STF
Symbol
EHT-LTF Symbol 1
EHT-LTF Symbol 2
Data
EHT-LTF field 1908
1910
1902
1904
Fields in HE MU PPDU
Fields in EHT MU PPDU
1900

Figure 19

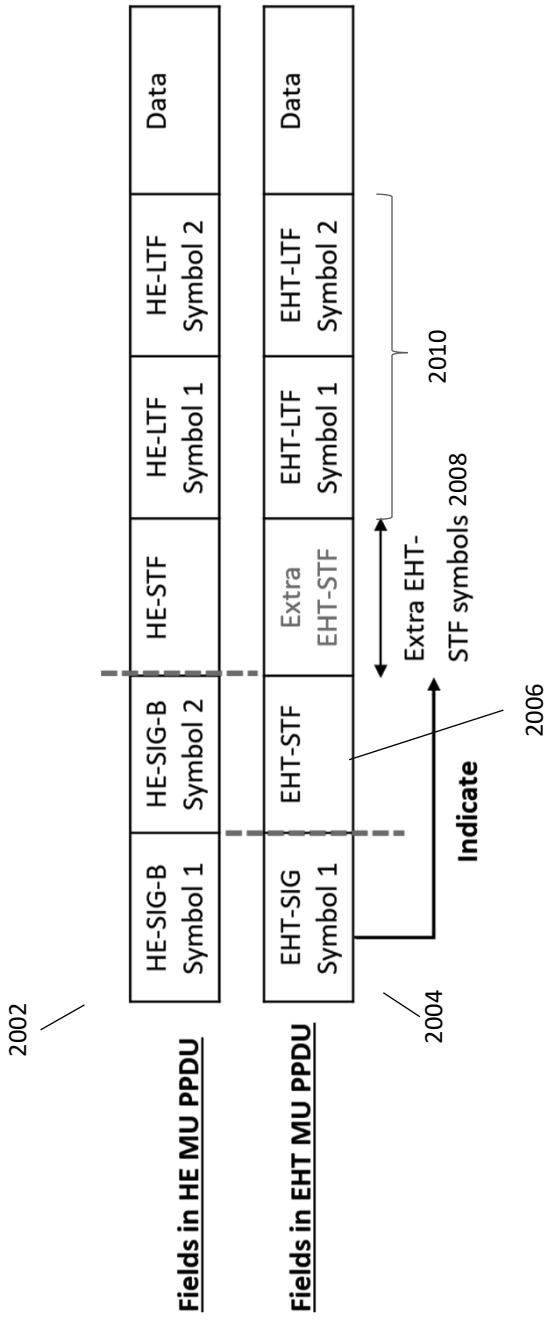
2002
HE-SIG-B Symbol 1
HE-SIG-B Symbol 2
HE-STF
HE-LTF Symbol 1
HE-LTF Symbol 2
Data
Fields in HE MU PPDU
EHT-SIG Symbol 1
EHT-STF
Extra EHT-STF
EHT-LTF Symbol 1
EHT-LTF Symbol 2
Data
Fields in EHT MU PPDU
2004
2006
Indicate
Extra EHT-STF symbols 2008
2010
2000

Figure 20

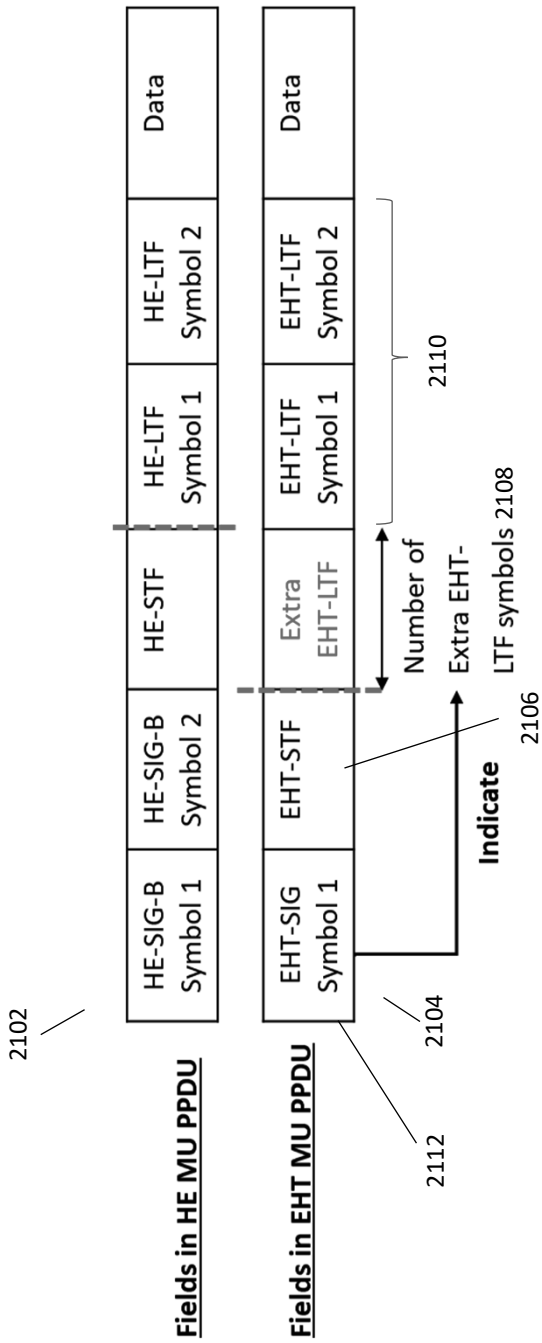
2102
HE-SIG-B Symbol 1
HE-SIG-B Symbol 2
HE-STF
HE-LTF Symbol 1
HE-LTF Symbol 2
Data
Fields in HE MU PPDU
EHT-SIG Symbol 1
EHT-STF
Extra EHT-LTF
EHT-LTF Symbol 1
EHT-LTF Symbol 2
Data
Fields in EHT MU PPDU
2104
2106
Indicate
Number of Extra EHT-LTF symbols 2108
2110
2112
2100

Figure 21

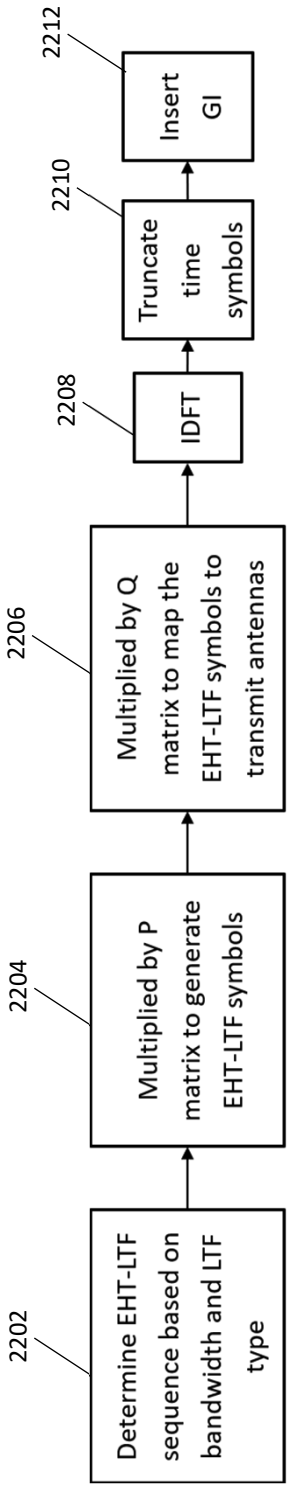
2202
Determine EHT-LTF sequence based on bandwidth and LTF type
2204
Multiplied by P matrix to generate EHT-LTF symbols
2206
Multiplied by Q matrix to map the EHT-LTF symbols to transmit antennas
2208
IDFT
2210
Truncate time symbols
2212
Insert GI
2200

Figure 22

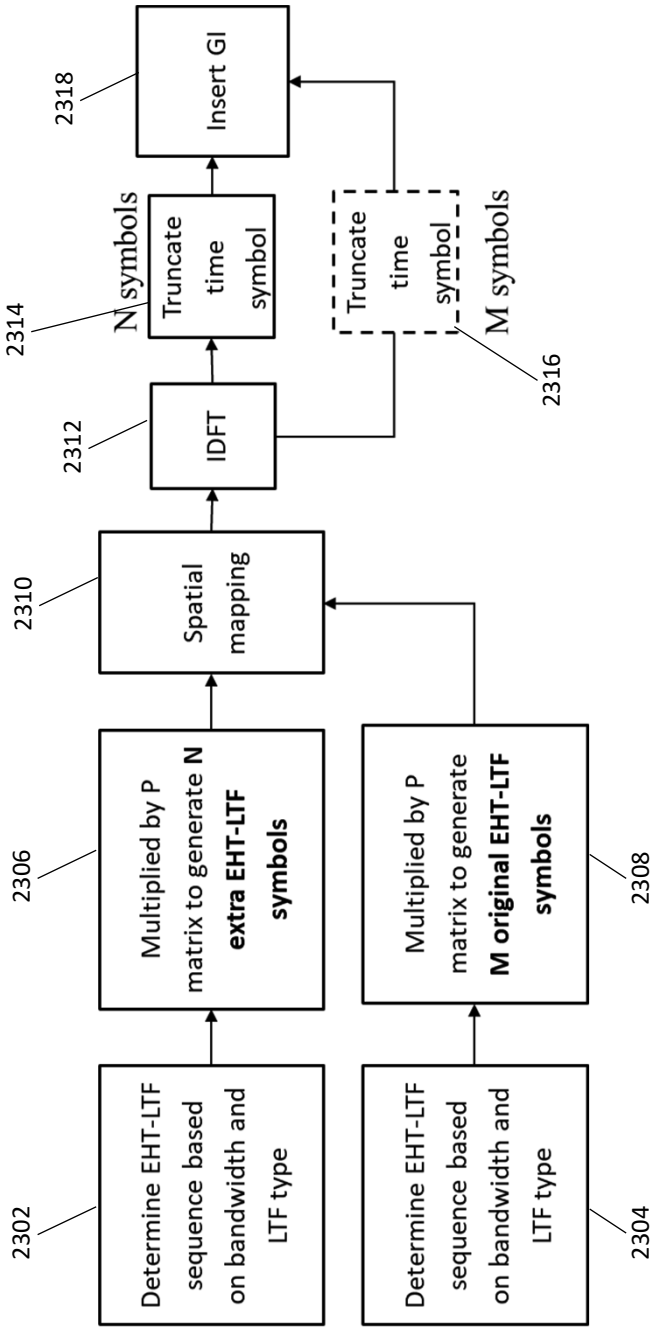
Determine EHT-LTF sequence based on bandwidth and LTF type
2302
Determine EHT-LTF sequence based on bandwidth and LTF type
2304
Multiplied by P matrix to generate N extra EHT-LTF symbols
2306
Multiplied by P matrix to generate M original EHT-LTF symbols
2308
Spatial mapping
2310
IDFT
2312
N symbols
Truncate time symbol
2314
M symbols
Truncate time symbol
2316
Insert GI
2318
2300

Figure 23

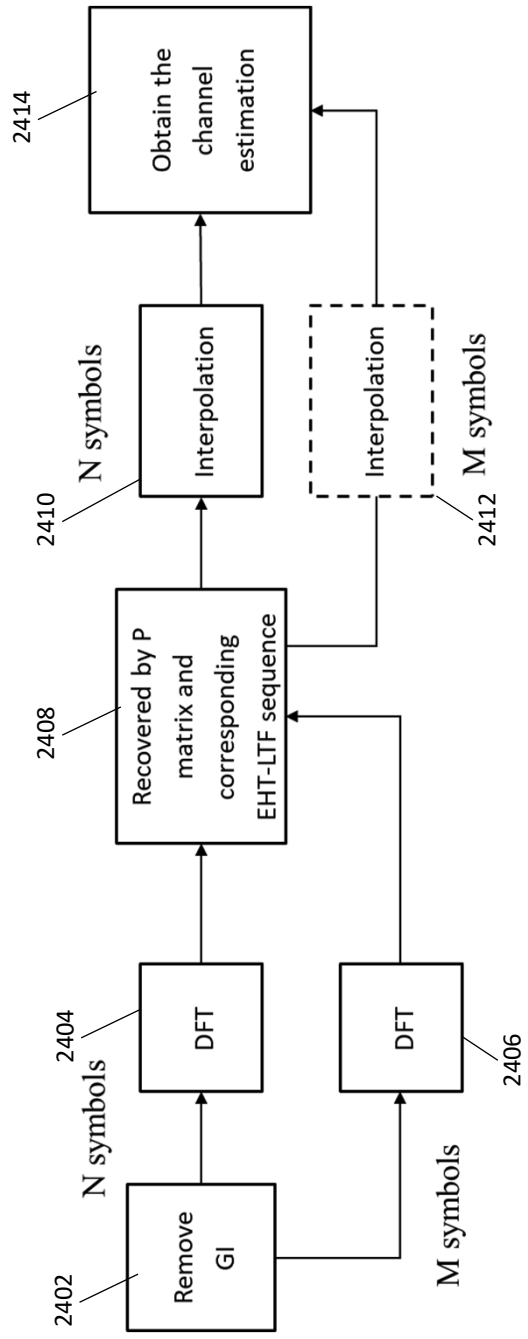
Remove GI
2402
N symbols
DFT
2404
DFT
2406
M symbols
Recovered by P matrix and corresponding EHT-LTF sequence
2408
Interpolation
2410
N symbols
Interpolation
2412
M symbols
Obtain the channel estimation
2414
2400

Figure 24

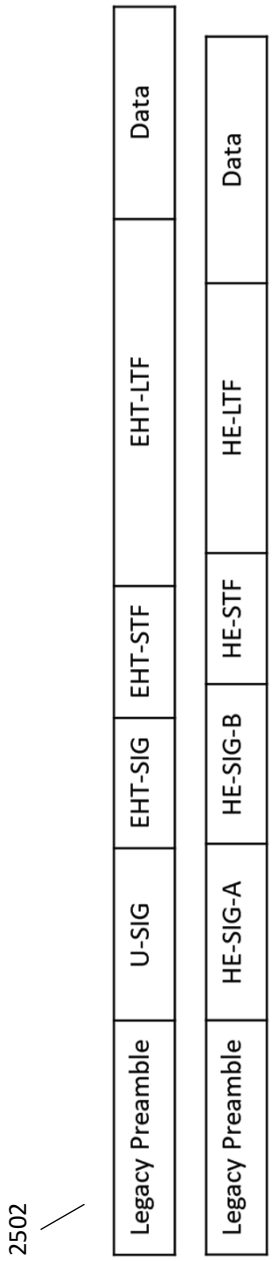
2502
EHT MU PPDU
Legacy Preamble
U-SIG
EHT-SIG
EHT-STF
EHT-LTF
Data
HE MU PPDU
Legacy Preamble
HE-SIG-A
HE-SIG-B
HE-STF
HE-LTF
Data
2504
2500

Figure 25

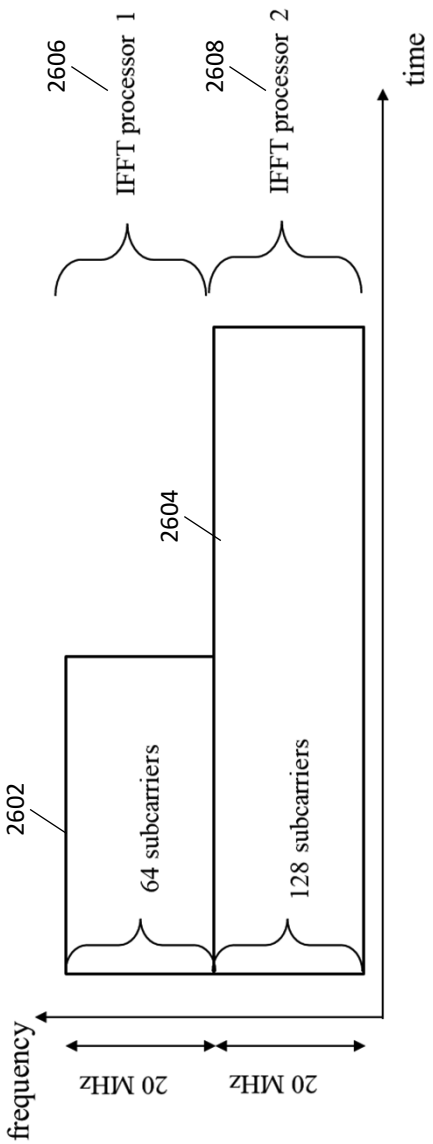
2606
IFFT processor 1
2608
IFFT processor 2
time
2604
2602
64 subcarriers
128 subcarriers
frequency
20 MHz
20 MHz
2600

Figure 26

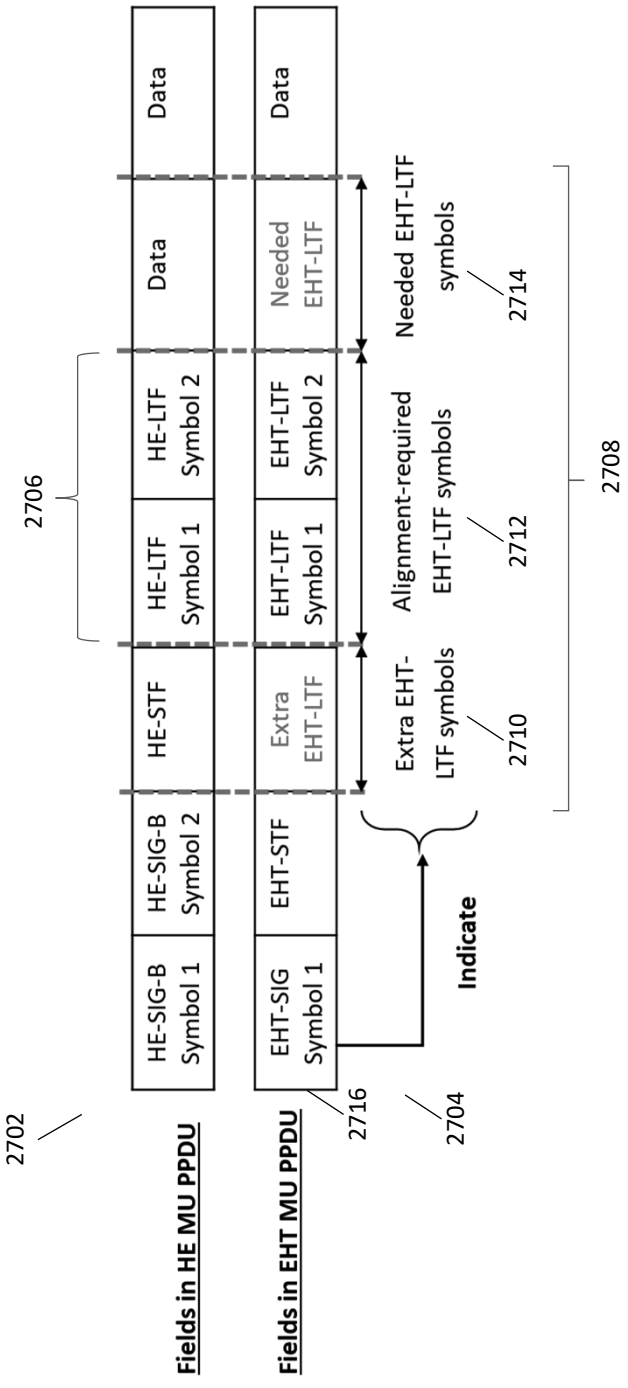
2700
2702
Fields in HE MU PPDU
HE-SIG-B Symbol 1
HE-SIG-B Symbol 2
HE-STF
HE-LTF Symbol 1
HE-LTF Symbol 2
Data
2706
Fields in EHT MU PPDU
EHT-SIG Symbol 1
EHT-STF
Extra EHT-LTF
EHT-LTF Symbol 1
EHT-LTF Symbol 2
Needed EHT-LTF
Data
2716
2704
Indicate
Extra EHT-LTF symbols
2710
Alignment-required EHT-LTF symbols
2712
Needed EHT-LTF symbols
2714
2708

Figure 27

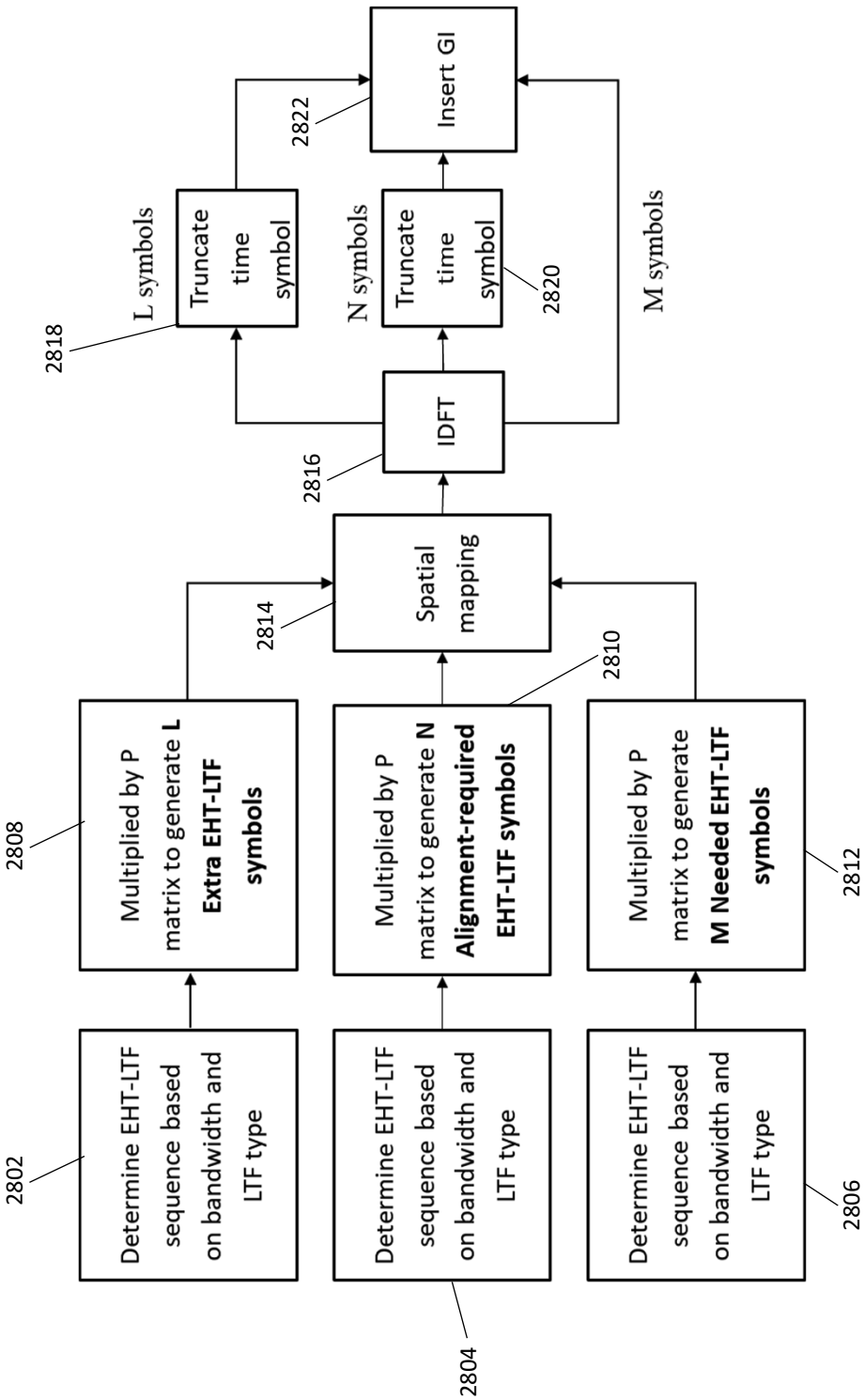
Determine EHT-LTF sequence based on bandwidth and LTF type
Determine EHT-LTF sequence based on bandwidth and LTF type
Determine EHT-LTF sequence based on bandwidth and LTF type
Multiplied by P matrix to generate L Extra EHT-LTF symbols
Multiplied by P matrix to generate N Alignment-required EHT-LTF symbols
Multiplied by P matrix to generate M Needed EHT-LTF symbols
Spatial mapping
IDFT
L symbols
Truncate time symbol
N symbols
Truncate time symbol
M symbols
Insert GI
2802
2804
2806
2808
2810
2812
2814
2816
2818
2820
2822
2800

Figure 28

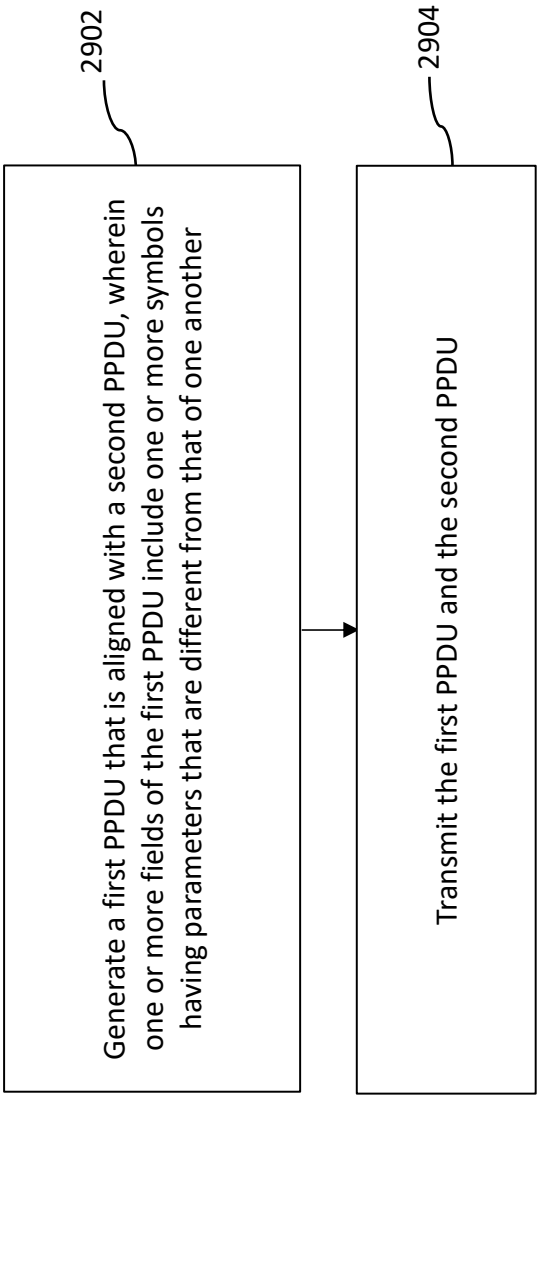
2902
2904
Generate a first PPDU that is aligned with a second PPDU, wherein one or more fields of the first PPDU include one or more symbols having parameters that are different from that of one another
Transmit the first PPDU and the second PPDU
2900

Figure 29

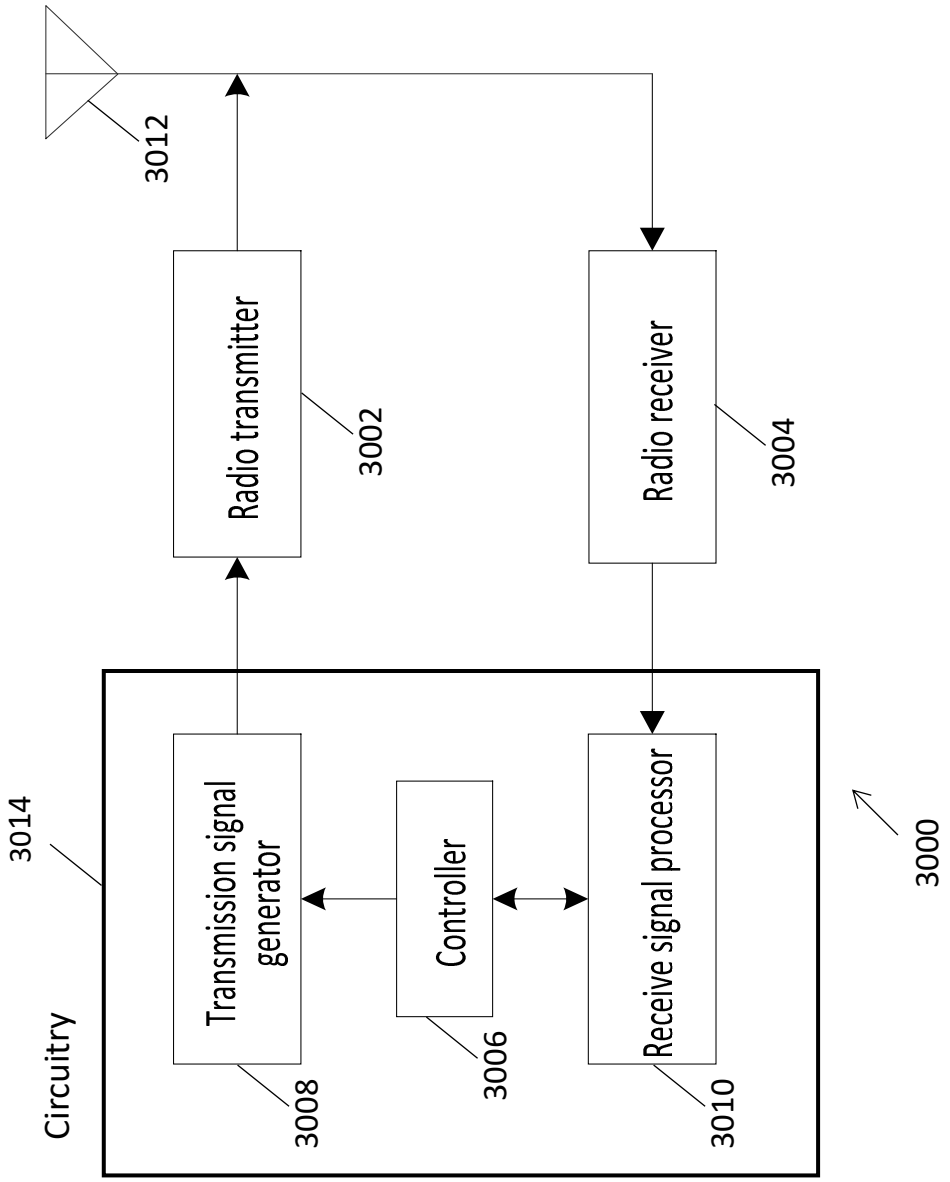
3012
Radio transmitter
3002
Radio receiver
3004
3014
Circuitry
Transmission signal generator
3008
Controller
3006
Receive signal processor
3010
3000

Figure 30