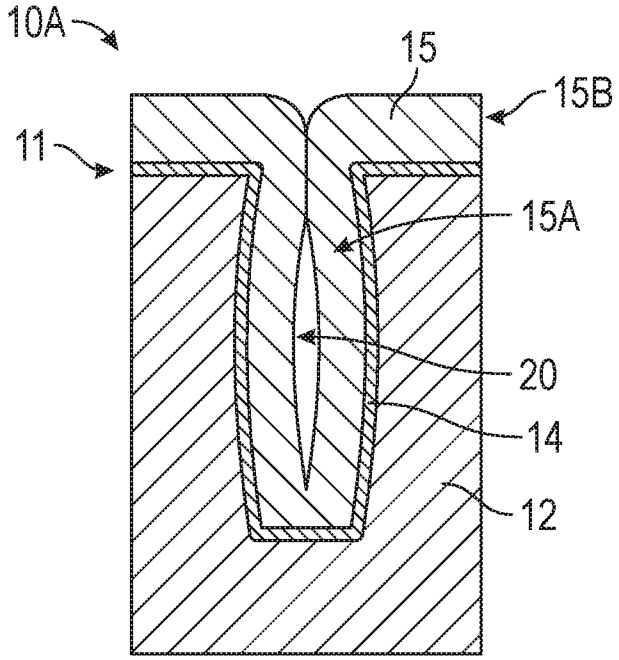

FIG. 1A

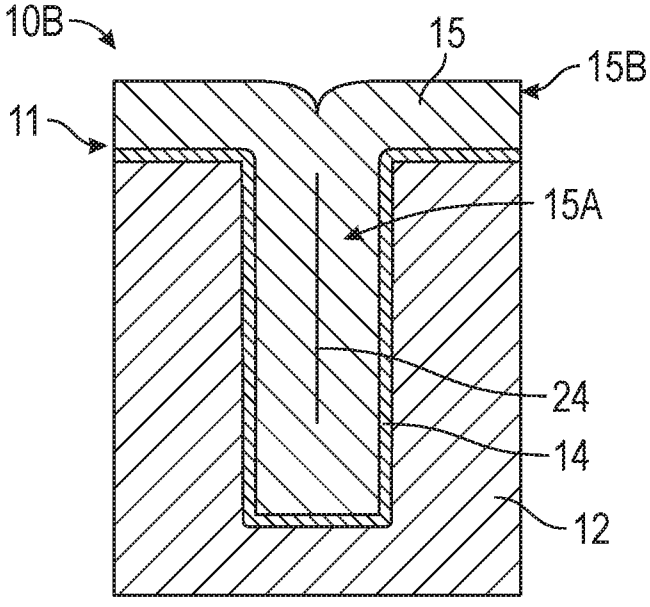

FIG. 1B

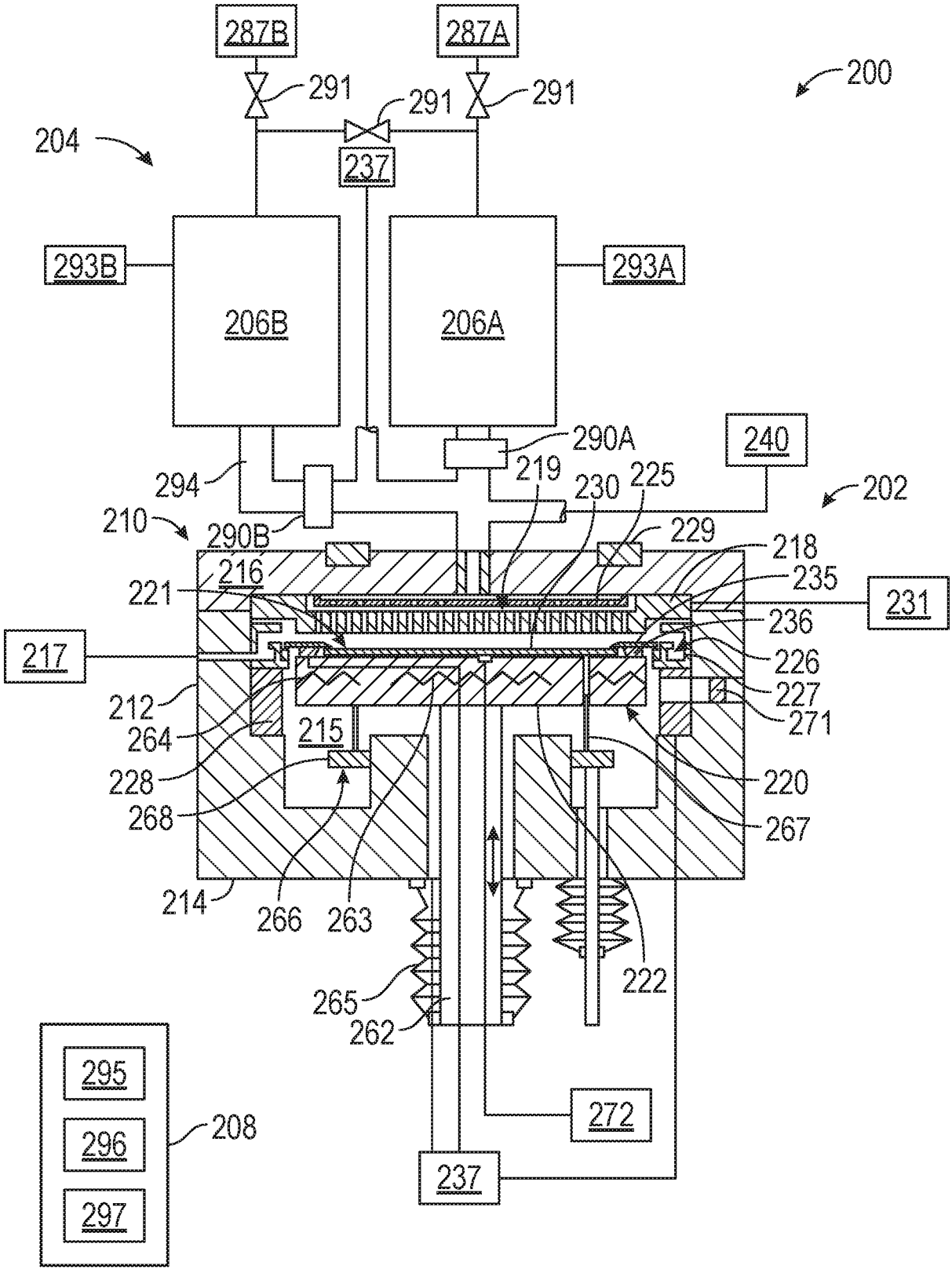
287B
287A
291
291
291
200
204
237
293B
293A
206B
206A
290A
240
294
219
230
225
202
210
290B
229
218
216
235
221
231
236
217
226
227
212
271
264
215
228
220
268
267
214
266
263
222
265
262
295
296
297
208
272
237

FIG. 2A

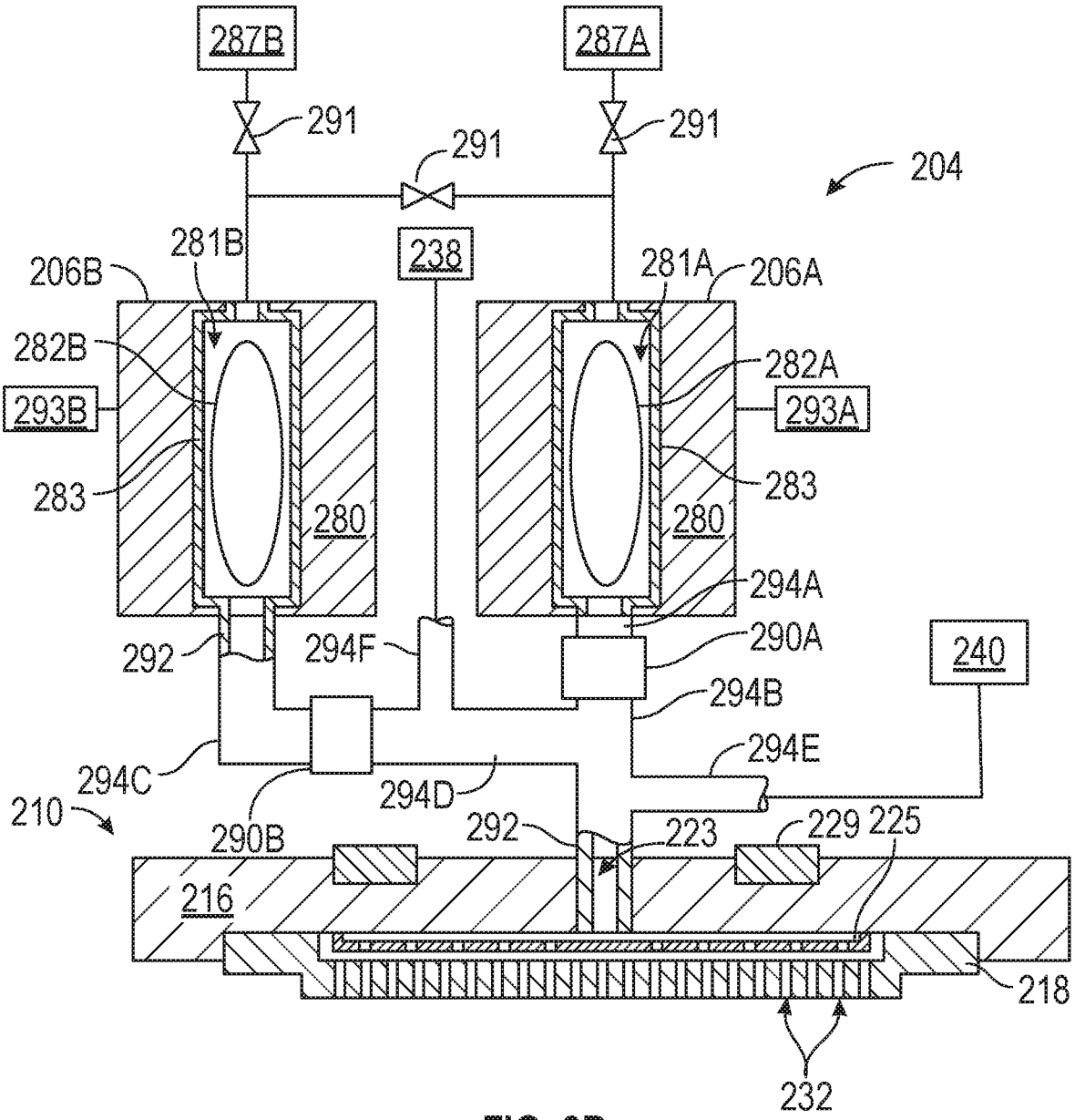
287B
287A
291
291
291
204
281B
238
281A
206B
206A
282B
282A
293B
293A
283
283
280
280
294A
292
294F
290A
240
294B
294E
294C
294D
210
290B
292
223
229
225
216
218
232

FIG. 2B

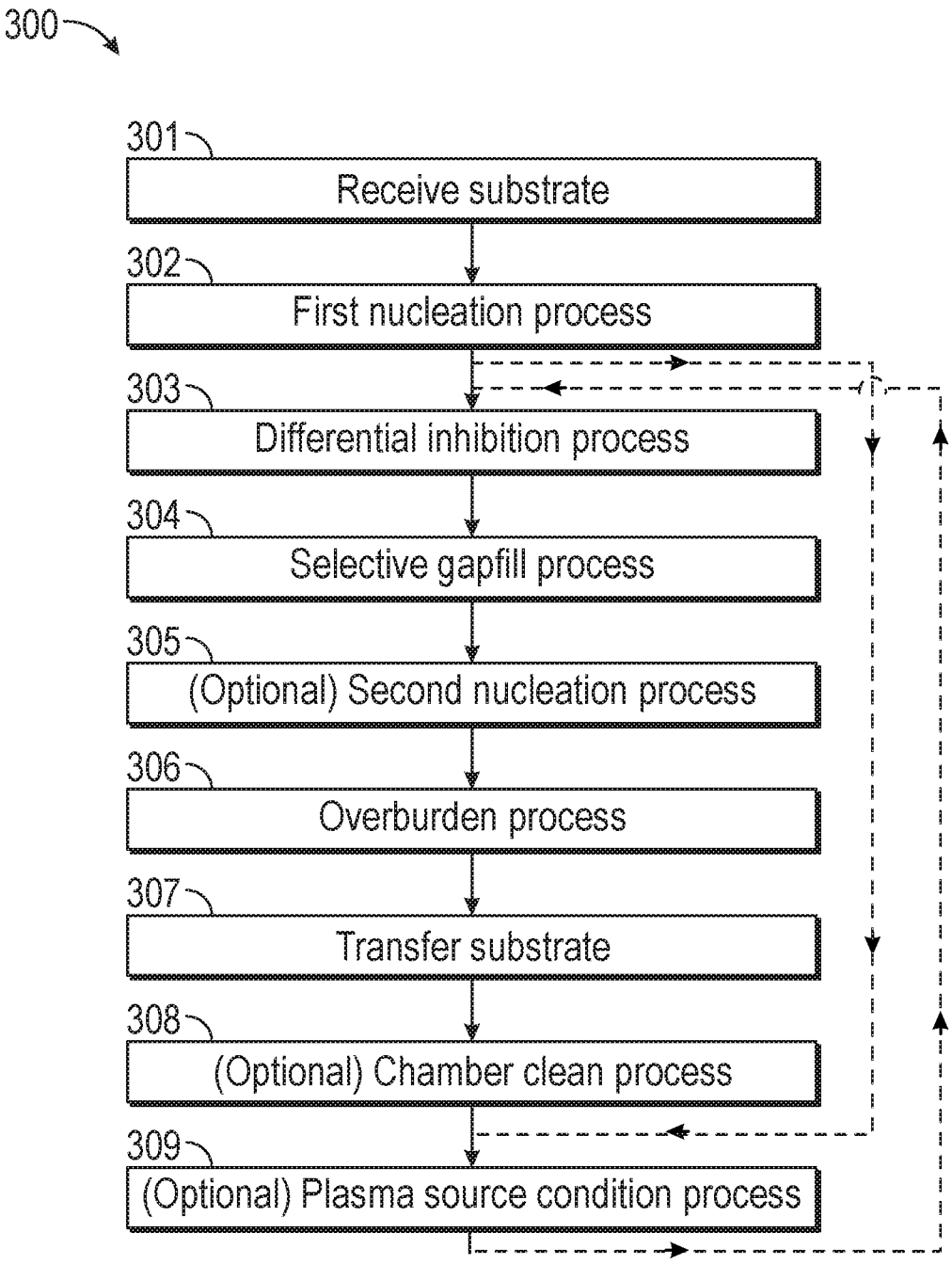
300
301
Receive substrate
302
First nucleation process
303
Differential inhibition process
304
Selective gapfill process
305
(Optional) Second nucleation process
306
Overburden process
307
Transfer substrate
308
(Optional) Chamber clean process
309
(Optional) Plasma source condition process

FIG. 3

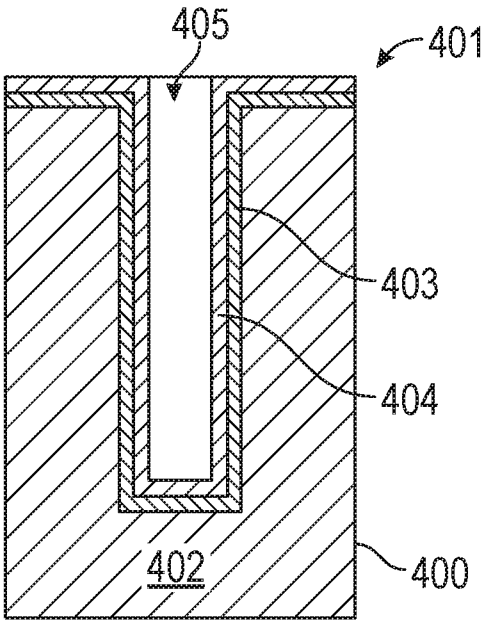

FIG. 4A

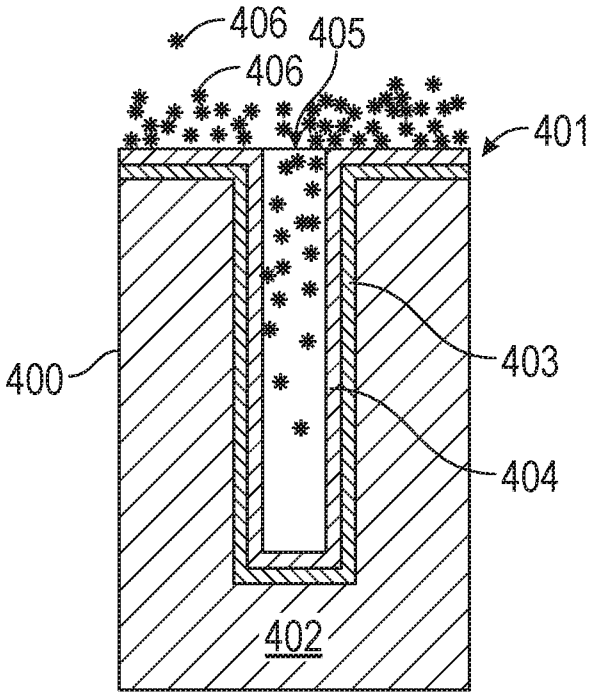

FIG. 4B

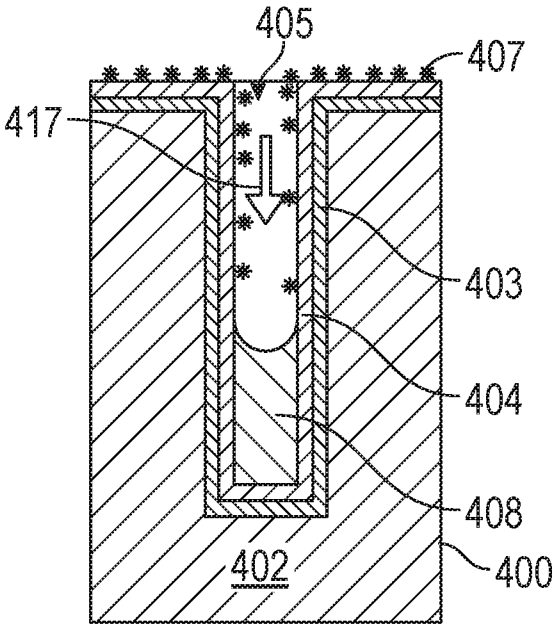

FIG. 4C

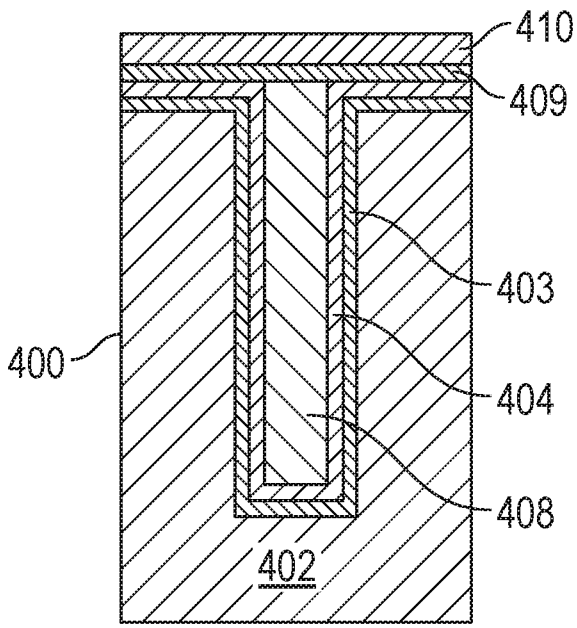

FIG. 4D

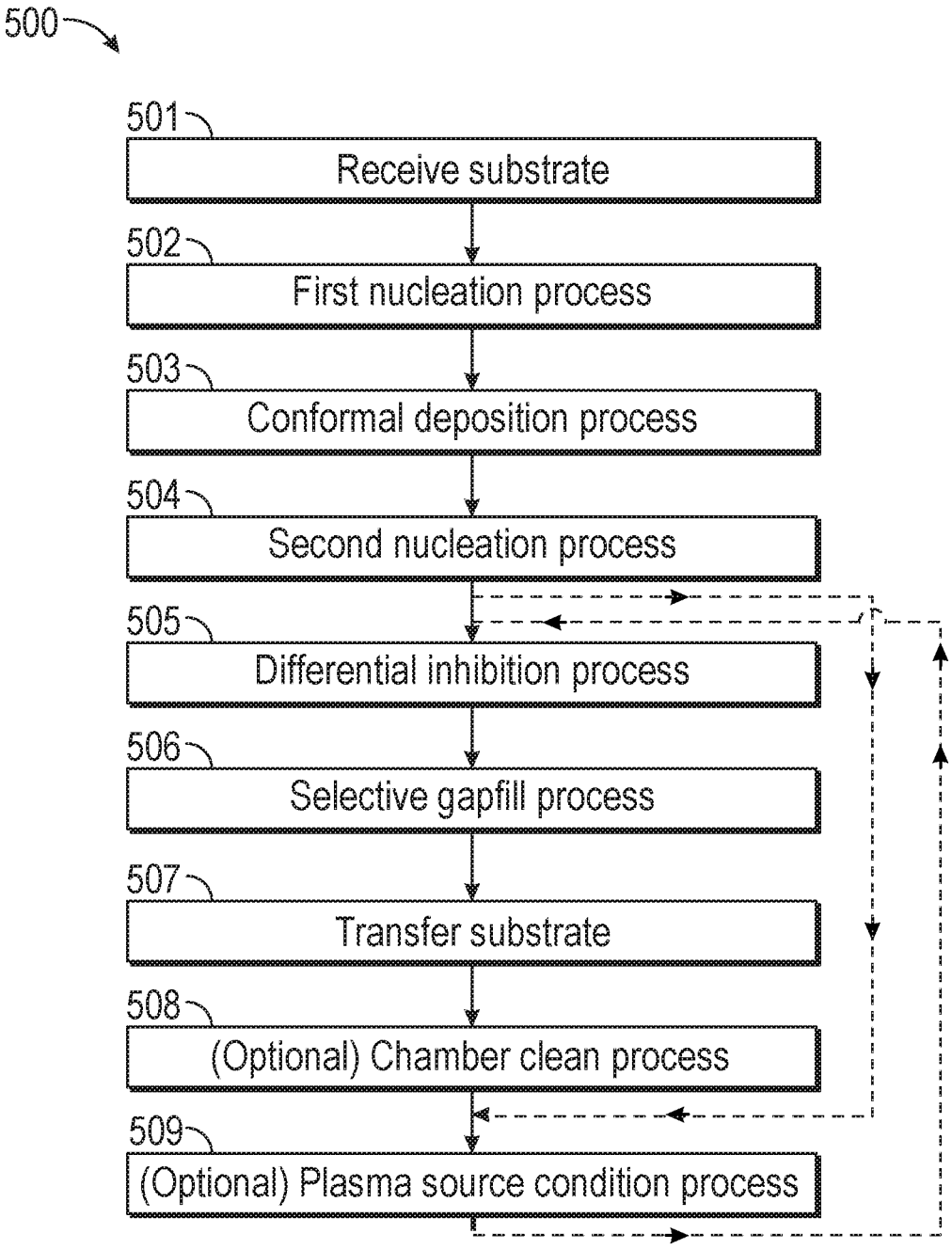
500
501
Receive substrate
502
First nucleation process
503
Conformal deposition process
504
Second nucleation process
505
Differential inhibition process
506
Selective gapfill process
507
Transfer substrate
508
(Optional) Chamber clean process
509
(Optional) Plasma source condition process

FIG. 5

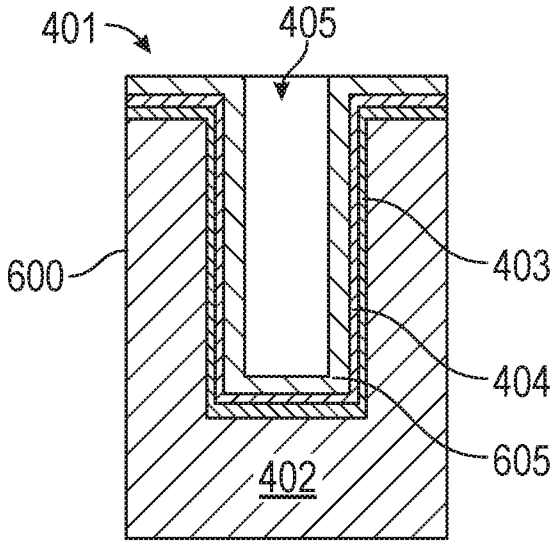

FIG. 6A

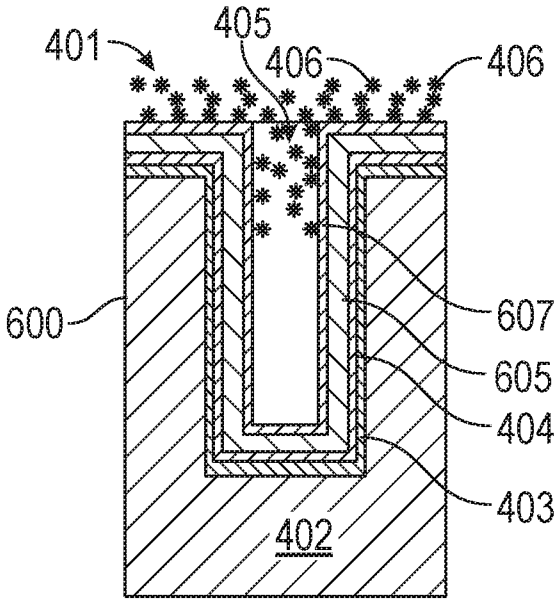

FIG. 6B

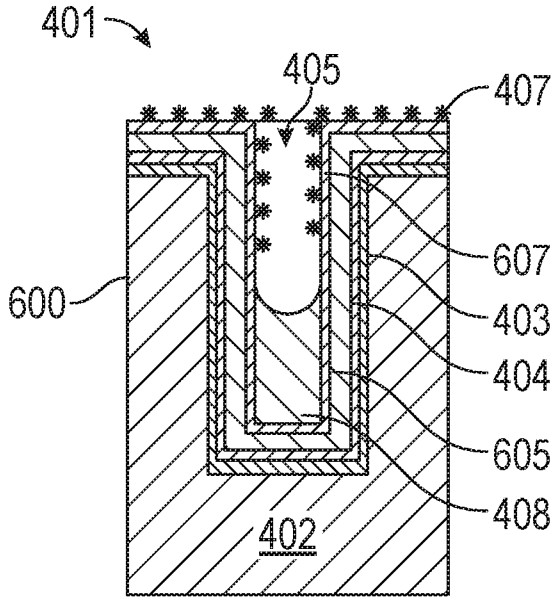

FIG. 6C

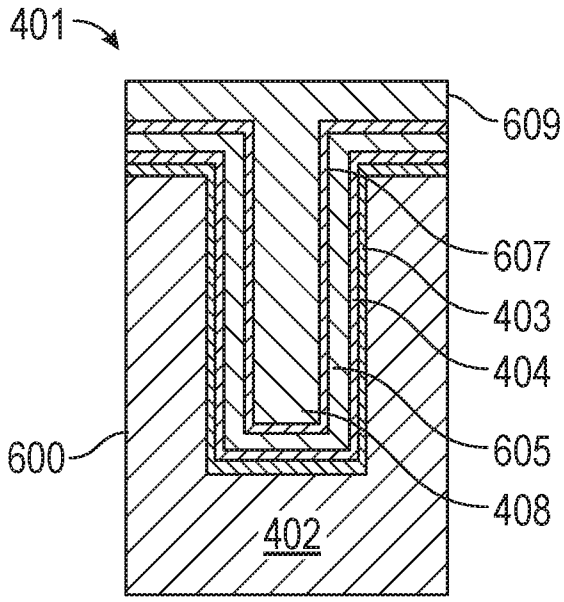

FIG. 6D

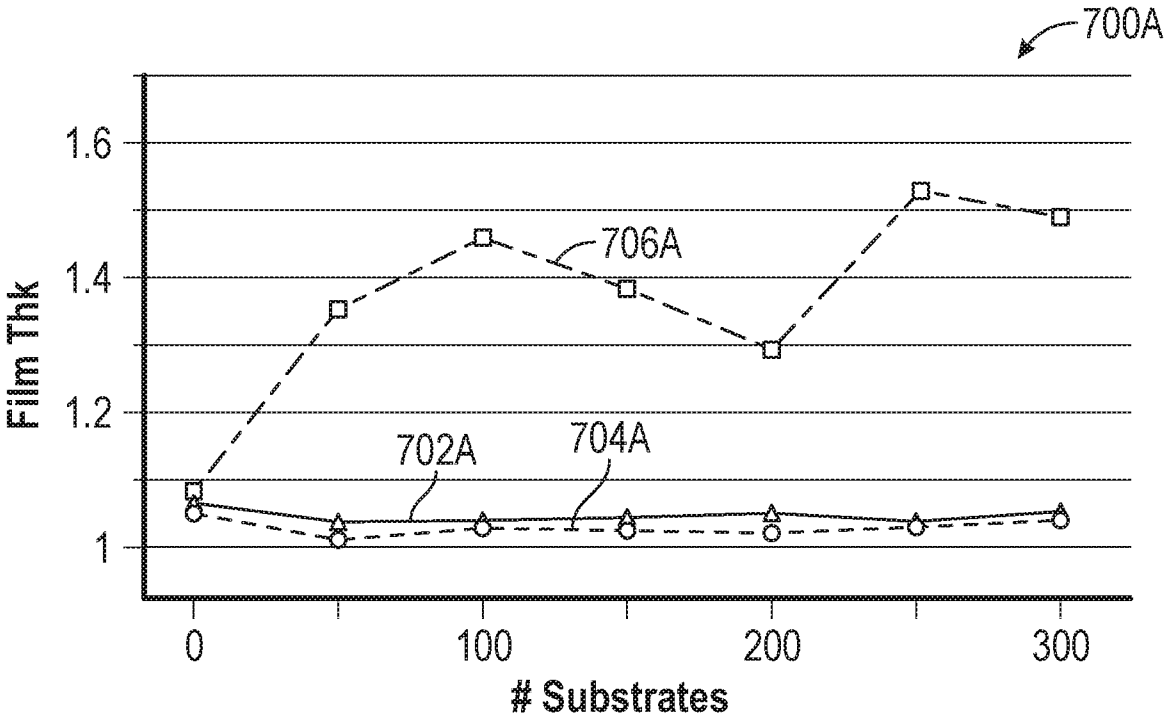
700A
1.6
1.4
1.2
1
Film Thk
706A
702A
704A
0
100
200
300
Substrates

FIG. 7A

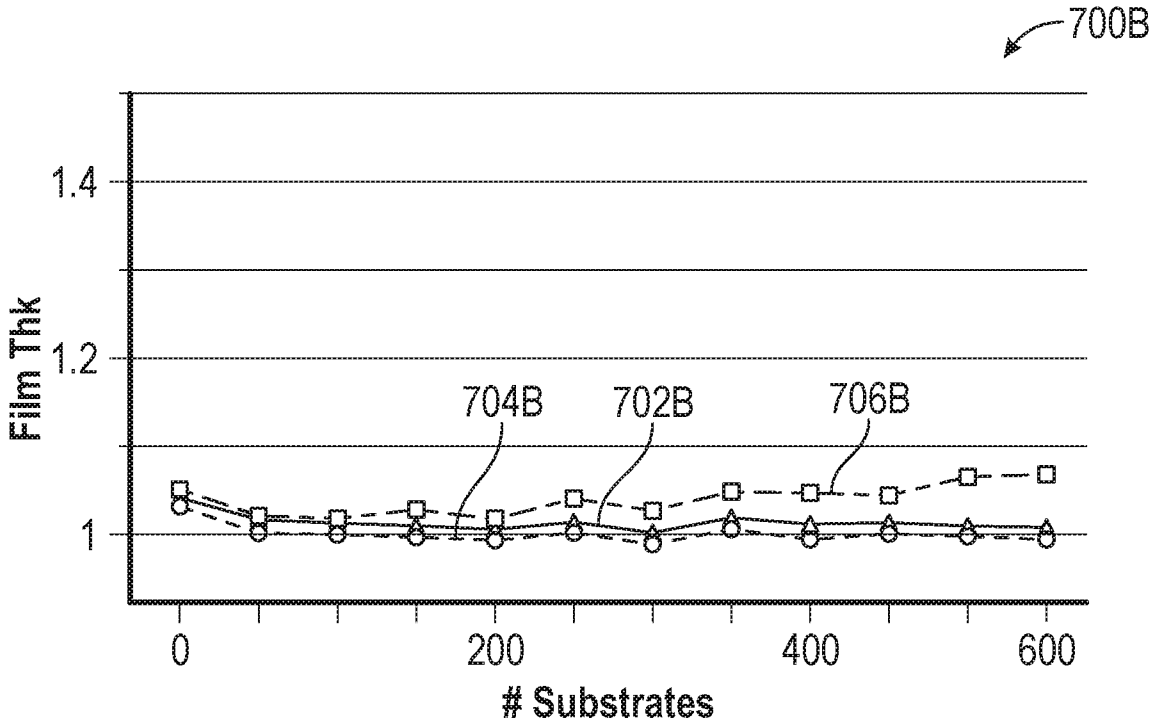
700B
1.4
1.2
1
Film Thk
704B
702B
706B
0
200
400
600
Substrates

FIG. 7B

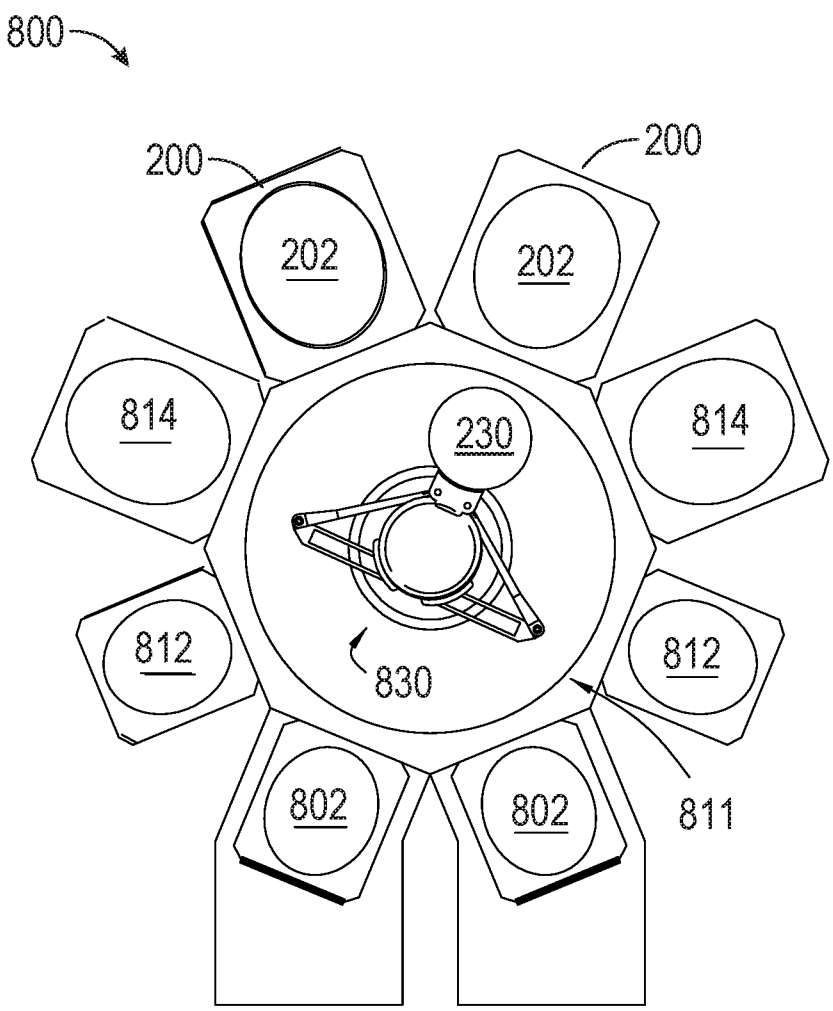

FIG. 8