[Fig. 1 (PRIOR ART)]

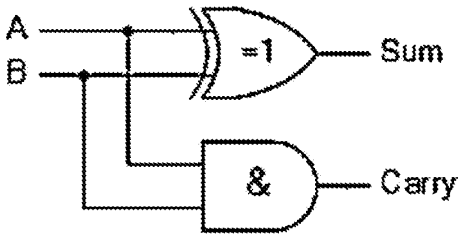

Truth Table			
B	A	SUM	CARRY
0	0	0	0
0	1	1	0
1	0	1	0
1	1	0	1

[Fig. 2 (PRIOR ART)]

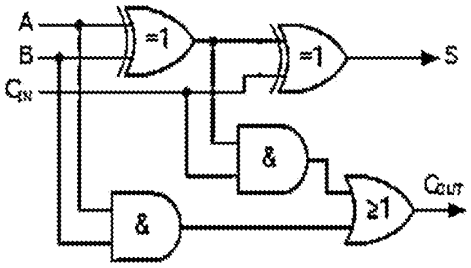

Truth Table				
C-in	B	A	Sum	C-out
0	0	0	0	0
0	0	1	1	0
0	1	0	1	0
0	1	1	0	1
1	0	0	1	0
1	0	1	0	1
1	1	0	0	1
1	1	1	1	1

[Fig. 3(PRIOR ART)]

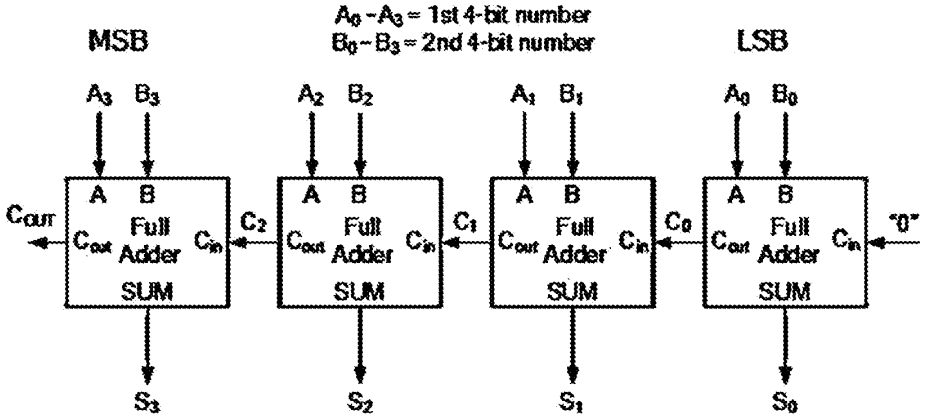

[Fig. 4(PRIOR ART)]

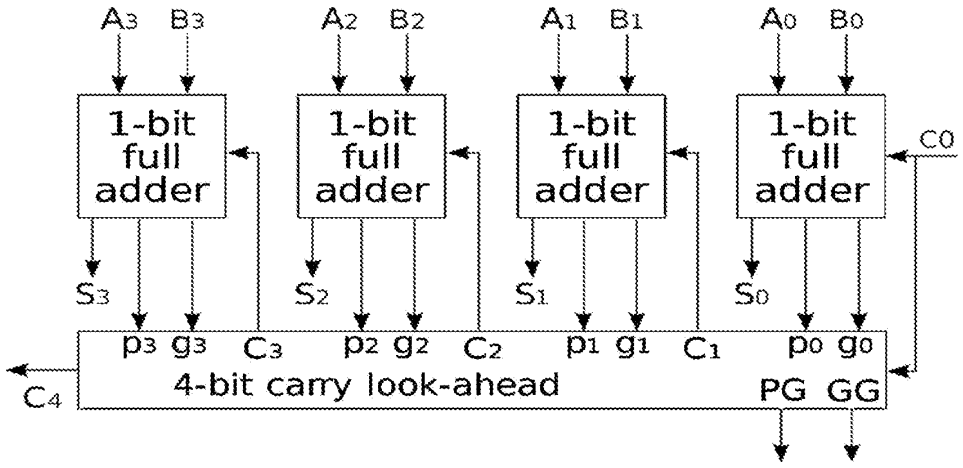

[Fig. 5]

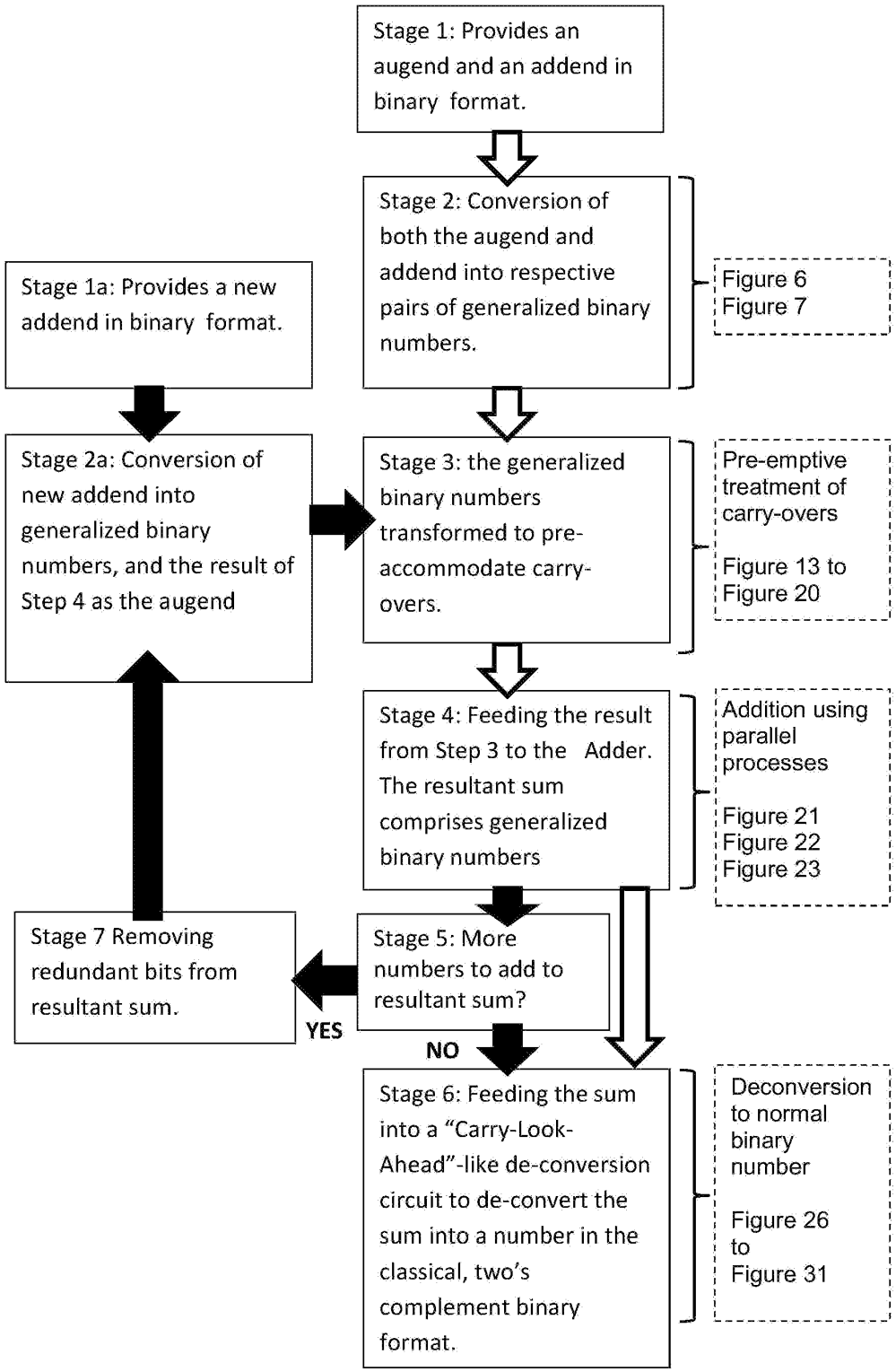
Stage 1: Provides an augend and an addend in binary format.
Stage 2: Conversion of both the augend and addend into respective pairs of generalized binary numbers.
Figure 6
Figure 7
Stage 1a: Provides a new addend in binary format.
Stage 2a: Conversion of new addend into generalized binary numbers, and the result of Step 4 as the augend
Stage 3: the generalized binary numbers transformed to pre-accommodate carry-overs.
Pre-emptive treatment of carry-overs
Figure 13 to Figure 20
Stage 4: Feeding the result from Step 3 to the Adder. The resultant sum comprises generalized binary numbers
Addition using parallel processes
Figure 21
Figure 22
Figure 23
Stage 7 Removing redundant bits from resultant sum.
Stage 5: More numbers to add to resultant sum?
YES
NO
Stage 6: Feeding the sum into a "Carry-Look-Ahead"-like de-conversion circuit to de-convert the sum into a number in the classical, two's complement binary format.
Deconversion to normal binary number
Figure 26
to
Figure 31

[Fig. 6]

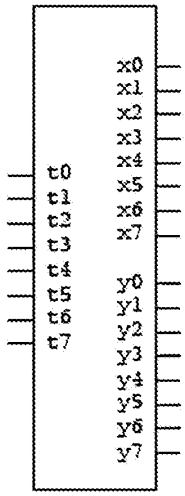

[Fig. 7]

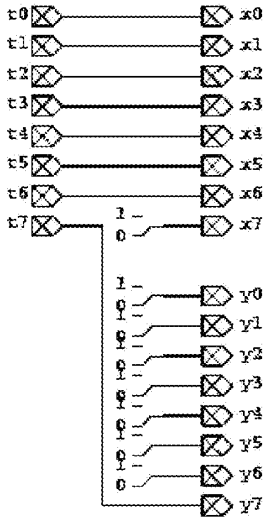

[Fig. 8]

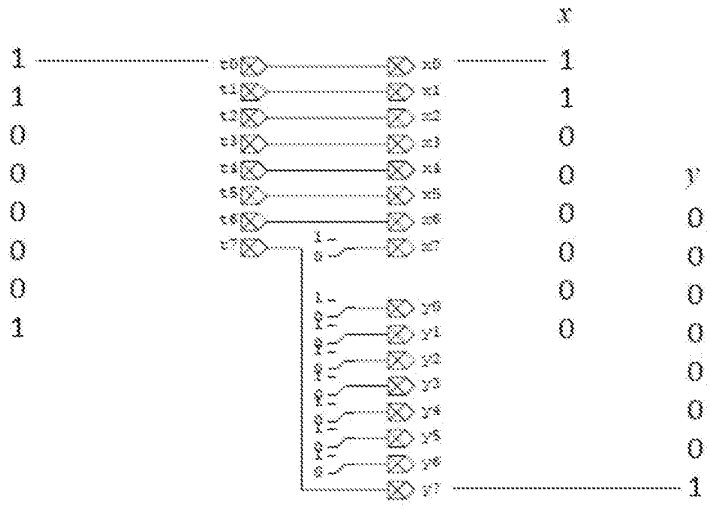

[Fig. 9]

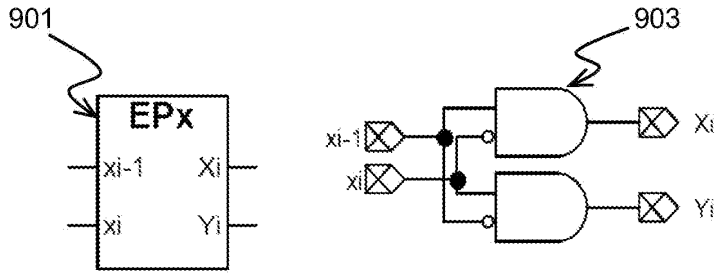

[Fig. 10]

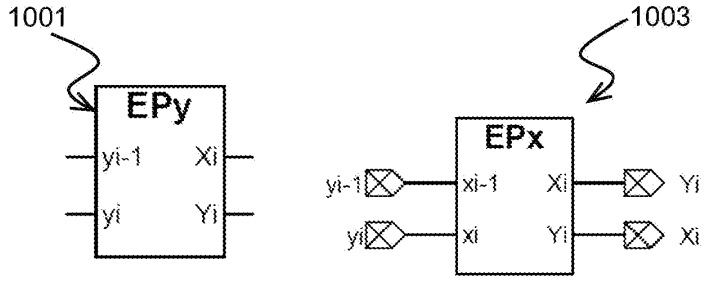

[Fig. 11]

Substring of $m\ (\geq 1)$ 1's				Substring of $m\ (\geq 1)\ \bar{1}$'s			
x_i	x_{i-1}	X_i	Y_i	y_i	y_{i-1}	X_i	Y_i
0	0	0	0	0	0	0	0
0	1	1	0	0	$\bar{1}$	0	$\bar{1}$
1	0	0	$\bar{1}$	$\bar{1}$	0	1	0
1	1	0	0	$\bar{1}$	$\bar{1}$	0	0

[Fig. 12]

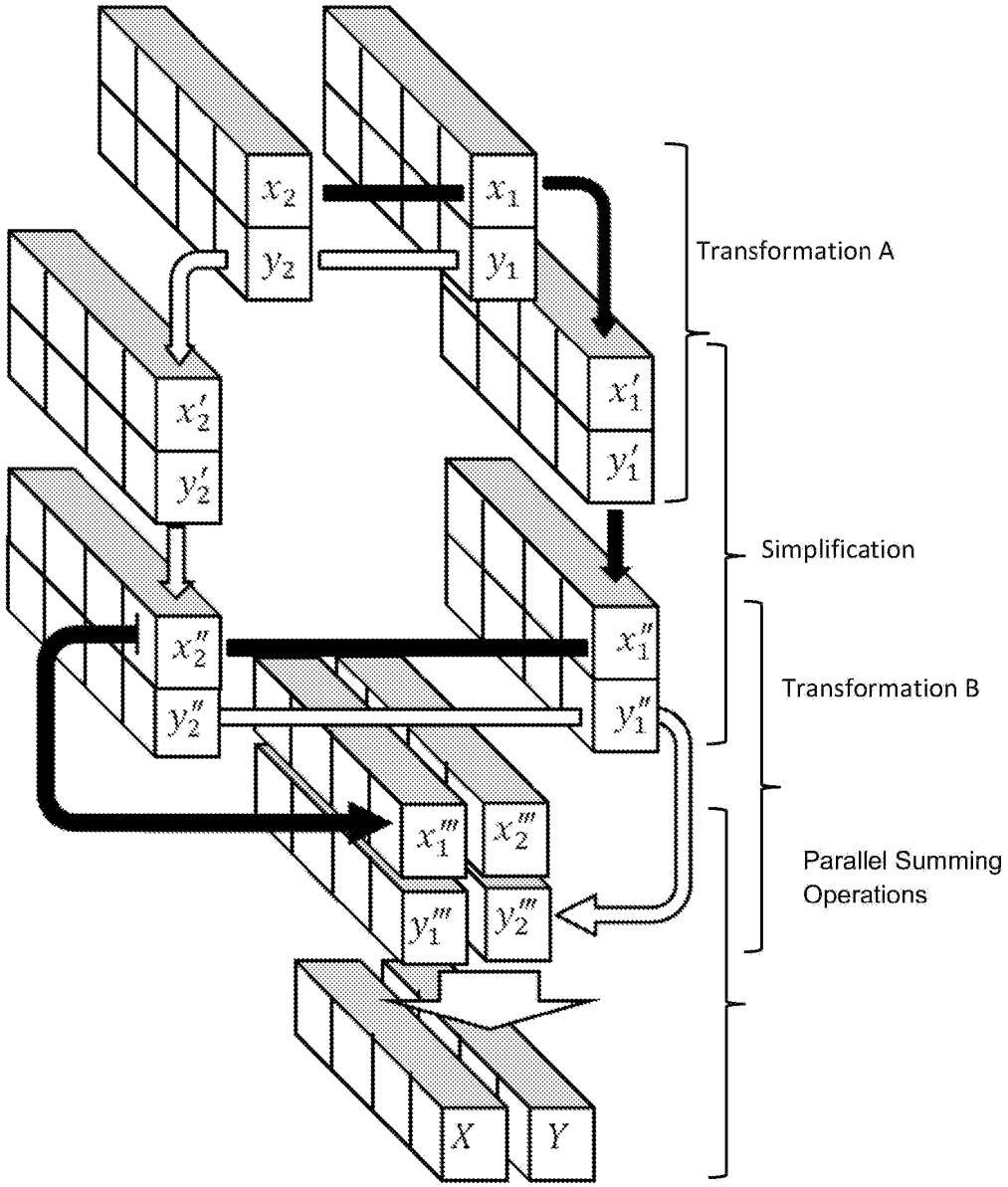
x_2
y_2
x_1
y_1
Transformation A
x_2'
y_2'
x_1'
y_1'
Simplification
x_2''
y_2''
x_1''
y_1''
Transformation B
x_1'''
x_2'''
y_1'''
y_2'''
Parallel Summing Operations
X
Y

[Fig. 13]

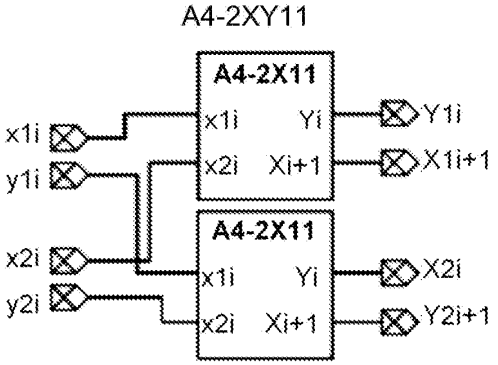
A4-2XY11
A4-2X11
x1i
Yi
x2i
Xi+1
A4-2X11
x1i
Yi
x2i
Xi+1
x1i
y1i
x2i
y2i
Y1i
X1i+1
X2i
Y2i+1

[Fig. 14]

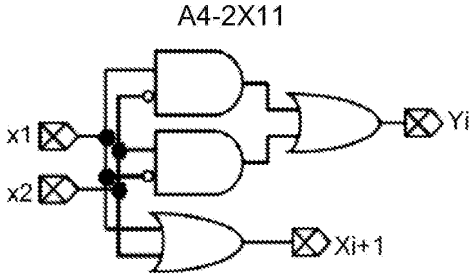

[Fig. 15]

Positive input components				Negative input components			
Input n_w^+		Output $(n'_w)_1$		Input n_w^-		Output $(n'_w)_2$	
$(x_i)_1$	$(x_i)_2$	$(x'_{i+1})_1$	$(y'_i)_1$	$(y_i)_1$	$(y_i)_2$	$(y'_{i+1})_2$	$(x'_i)_2$
0	0	0	0	0	0	0	0
0	1	1	$\bar{1}$	0	$\bar{1}$	$\bar{1}$	1
1	0	1	$\bar{1}$	$\bar{1}$	0	$\bar{1}$	1
1	1	1	0	$\bar{1}$	$\bar{1}$	$\bar{1}$	0

[Fig. 16]

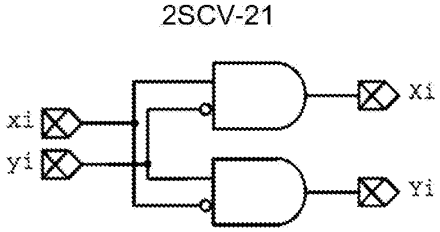

[Fig. 17]

Input $\hat{z}_j$	Output z'_j
0^*	0
1	1
$\bar{1}$	$\bar{1}$

0^* implies $\hat{x}_j = \hat{y}_j = 0$ or $\hat{x}_j = \hat{y}_j = 1$.

[Fig. 18]

A4-2XY12

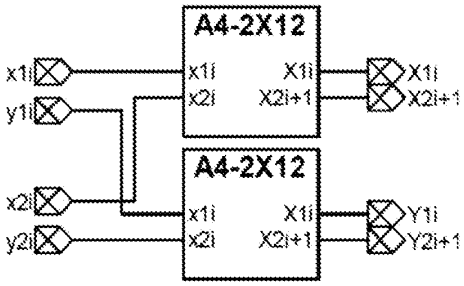

[Fig. 19]

A4-2X12

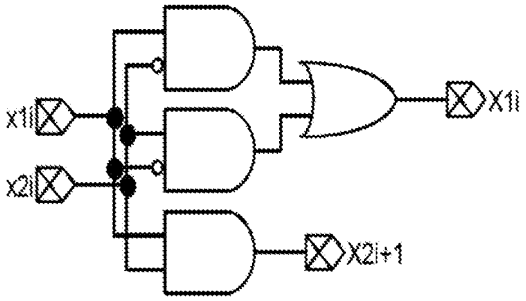

[Fig. 20]

Positive input		Output		Negative input		Output	
$(x_i'')_1$	$(x_i'')_2$	$(x_{i+1}'')_2$	$(x_i'')_1$	$(y_i'')_1$	$(y_i'')_2$	$(y_{i-1}'')_2$	$(y_i'')_1$
0	0	0	0	0	0	0	0
0	1	0	1	0	$\overline{1}$	0	$\overline{1}$
1	0	0	1	$\overline{1}$	0	0	$\overline{1}$
1	1	1	0	$\overline{1}$	$\overline{1}$	$\overline{1}$	0

[Fig. 21]

A4-2XY13

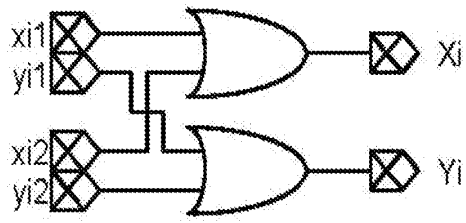

[Fig. 22]

Input n_w'''		Output N_w
$(z_i''')_1$	$(z_i''')_2$	Z_i
0	0	0
0	1	1
0	$\bar{1}$	$\bar{1}$
1	0	1
1	1	*
1	$\bar{1}$	0
$\bar{1}$	0	$\bar{1}$
$\bar{1}$	1	0
$\bar{1}$	$\bar{1}$	*

[Fig. 23]

Inputs				Outputs		Simplified Outputs	
x_1'''	y_1'''	x_2'''	y_2'''	X'	Y'	X	Y
0	0	0	0	0	0	0	0
0	0	1	0	1	0	1	0
0	0	0	$\bar{1}$	0	$\bar{1}$	0	$\bar{1}$
1	0	0	0	1	0	1	0
1	0	1	0	Prevented			
1	0	0	$\bar{1}$	1	$\bar{1}$	0	0
0	$\bar{1}$	0	0	0	$\bar{1}$	0	$\bar{1}$
0	$\bar{1}$	1	0	1	$\bar{1}$	0	0
0	$\bar{1}$	0	$\bar{1}$	Prevented			

[Fig. 24]

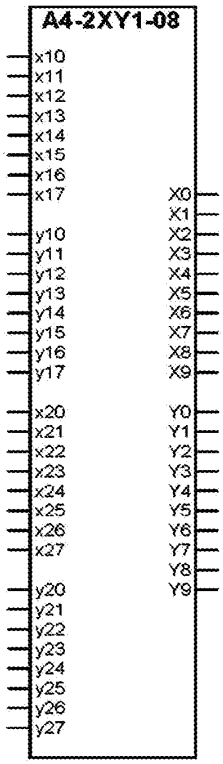
A4-2XY1-08
x10
x11
x12
x13
x14
x15
x16
x17
y10
y11
y12
y13
y14
y15
y16
y17
x20
x21
x22
x23
x24
x25
x26
x27
y20
y21
y22
y23
y24
y25
y26
y27
X0
X1
X2
X3
X4
X5
X6
X7
X8
X9
Y0
Y1
Y2
Y3
Y4
Y5
Y6
Y7
Y8
Y9

[Fig. 25]

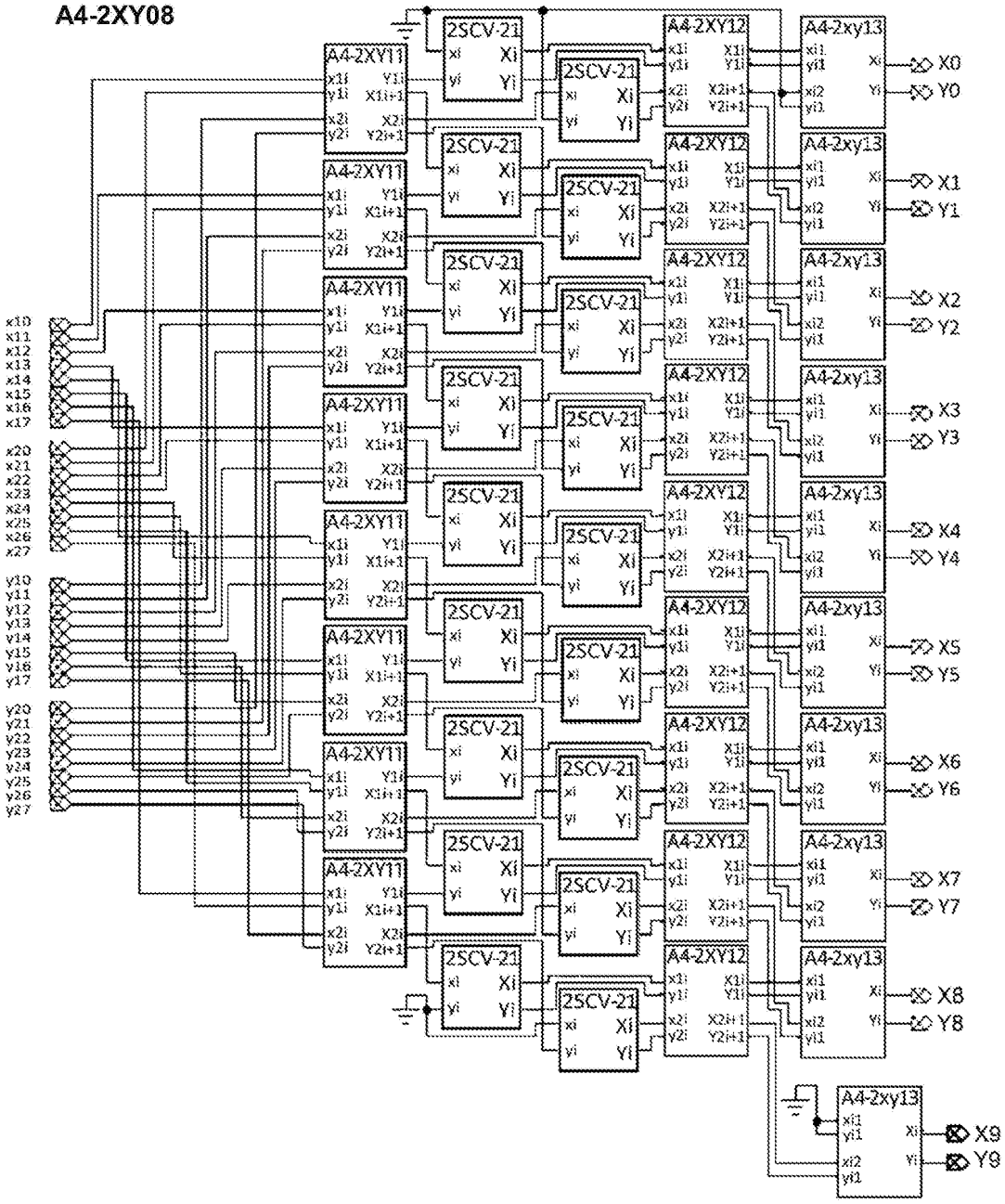
A4-2XY08
A4-2XY11
2SCV-21
A4-2XY12
A4-2xy13
X0
Y0
X1
Y1
X2
Y2
X3
Y3
X4
Y4
X5
Y5
X6
Y6
X7
Y7
X8
Y8
X9
Y9

[Fig. 26]

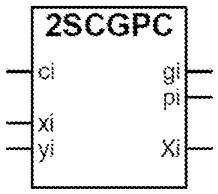
2SCGPC
ci
gi
pi
xi
yi
Xi

[Fig. 27]

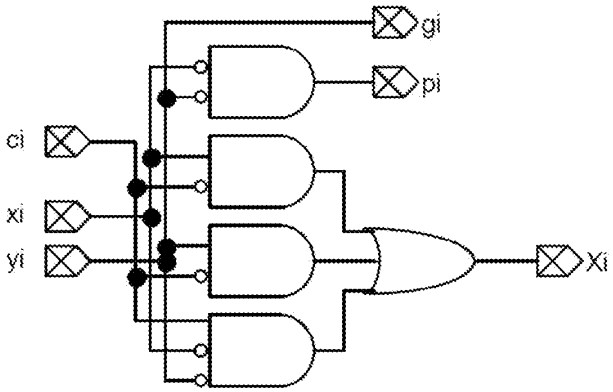

[Fig. 28]

Input z_i	Generate g_i	Propagate p_i
0 ($x_i = y_i = 0$ only)	0	1
1	0	0
$\overline{1}$	1	0

[Fig. 29]

"carry" c_i	General binary number z_i	2's complement number X_i
0	0	0
0	1	1
0	$\overline{1}$	1
1	0	1
1	1	0
1	$\overline{1}$	0

where $i = 0,1,2,\cdots,(n-1)$.

[Fig. 30]

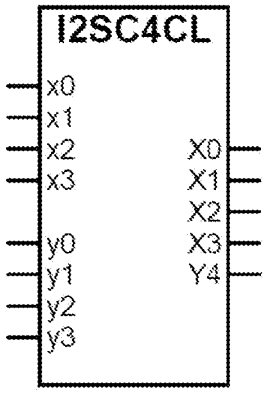

[Fig. 31]

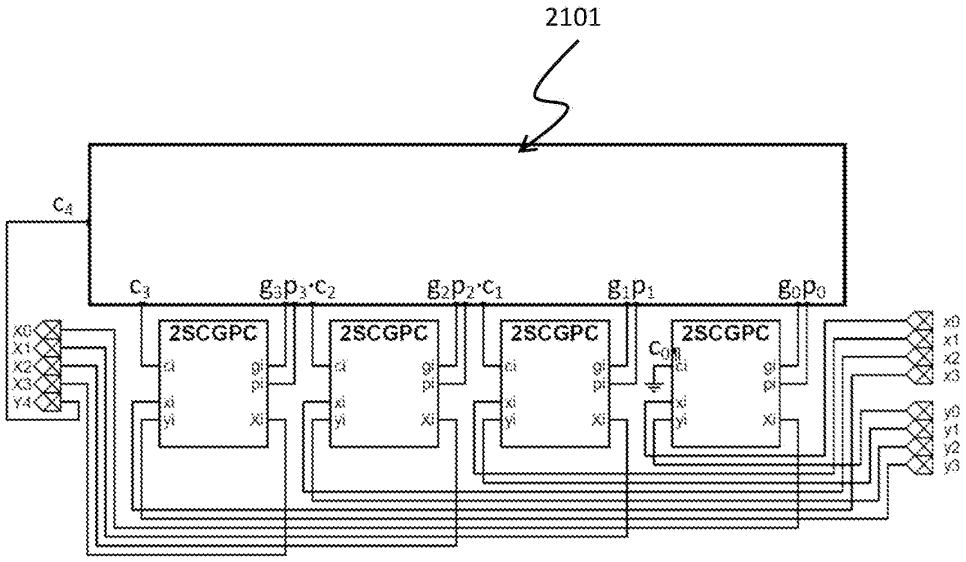

[Fig. 32]

Input		Output		Input		Output	
$(x_i)_1$	$(x_i)_2$	$(x_i')_1$	$(x_i')_2$	$(y_i)_1$	$(y_i)_2$	$(y_i')_1$	$(y_i')_2$
0	0	0	0	0	0	0	0
0	1	1	0	0	$\overline{1}$	$\overline{1}$	0
1	0	1	0	$\overline{1}$	0	$\overline{1}$	0
1	1	1	1	$\overline{1}$	$\overline{1}$	$\overline{1}$	$\overline{1}$

[Fig. 33]

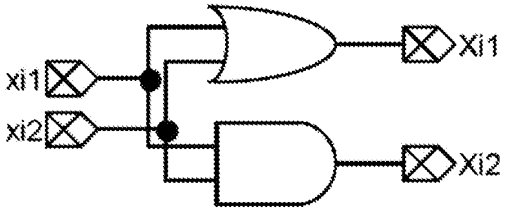

[Fig. 34]

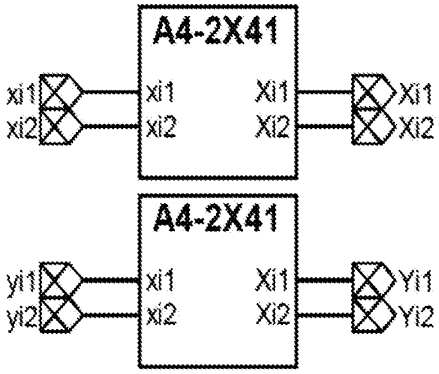

Rule 26, 30.05.2025

[Fig. 35]

Input			Output			Input			Output		
$(x_i')_1$	$(x_i')_2$	$(x_{i-1}')_1$	$(x_i'')_1$	$(x_i'')_2$	$(y_i'')_3$	$(y_i')_1$	$(y_i')_2$	$(y_{i-1}')_1$	$(y_i'')_1$	$(y_i'')_2$	$(x_i'')_3$
0	0	0	0	0	0	0	0	0	0	0	0
0	0	1	0	1	0	0	0	$\bar{1}$	0	$\bar{1}$	0
0	1	0	*	*	*	0	$\bar{1}$	0	*	*	*
0	1	1	*	*	*	0	$\bar{1}$	$\bar{1}$	*	*	*
1	0	0	0	0	$\bar{1}$	$\bar{1}$	0	0	0	0	1
1	0	1	0	0	0	$\bar{1}$	0	$\bar{1}$	0	0	0
1	1	0	0	0	0	$\bar{1}$	$\bar{1}$	0	0	0	0
1	1	1	1	0	0	$\bar{1}$	$\bar{1}$	$\bar{1}$	$\bar{1}$	0	0

[Fig. 36]

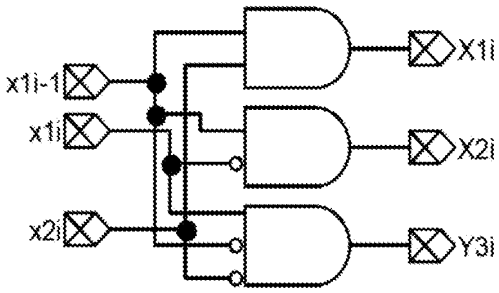

[Fig. 37]

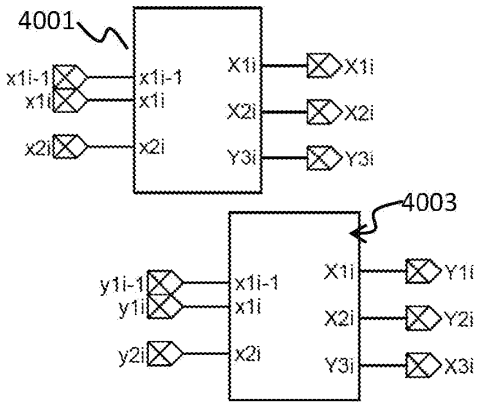

[Fig. 38]

Input*					Output
$(x_i'')_1$	$(x_i'')_2$	$(x_i'')_3$	$(x_{i-1}'')_2$	$(x_{i-1}'')_3$	x_i'''
0	0	0	0	0	0
0	0	0	0	1	0
0	0	0	1	0	0
0	0	0	1	1	1
0	0	1	0	0	1
0	0	1	1	0	1
0	1	0	0	0	1
0	1	0	0	1	1
0	1	1	0	0	0
1	0	0	0	0	1
1	0	0	0	1	1
$(y_i'')_1$	$(y_i'')_2$	$(y_i'')_3$	$(y_{i-1}'')_2$	$(y_{i-1}'')_3$	y_i'''
0	0	0	0	0	0
0	0	0	0	$\bar{1}$	0
0	0	0	$\bar{1}$	0	0
0	0	0	$\bar{1}$	$\bar{1}$	$\bar{1}$
0	0	$\bar{1}$	0	0	$\bar{1}$
0	0	$\bar{1}$	$\bar{1}$	0	$\bar{1}$
0	$\bar{1}$	0	0	0	$\bar{1}$
0	$\bar{1}$	0	0	$\bar{1}$	$\bar{1}$
0	$\bar{1}$	$\bar{1}$	0	0	0
$\bar{1}$	0	0	0	0	$\bar{1}$
$\bar{1}$	0	0	0	$\bar{1}$	$\bar{1}$

[Fig. 39]

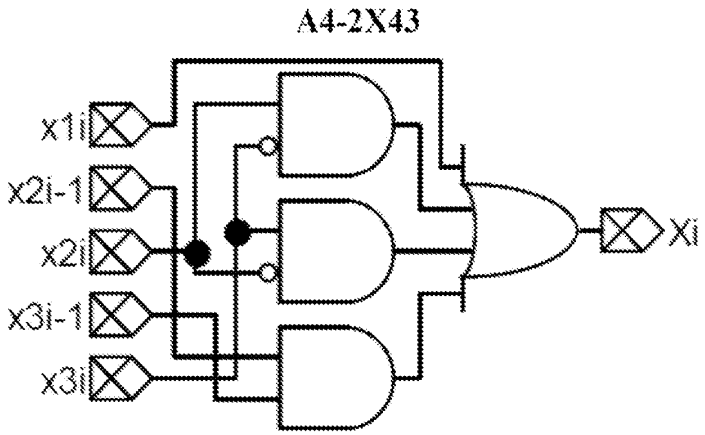

[Fig. 40]

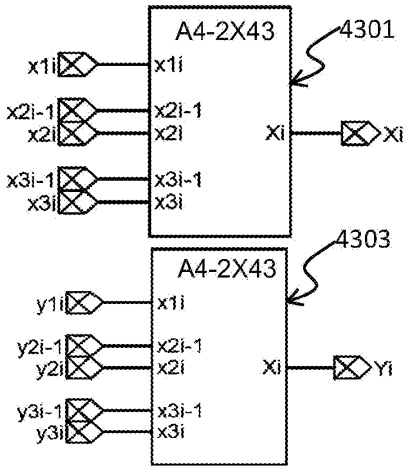
A4-2X43
4301
x1i
x1i
x2i-1
x2i
x2i-1
x2i
Xi
Xi
x3i-1
x3i
x3i-1
x3i
A4-2X43
4303
y1i
x1i
y2i-1
y2i
x2i-1
x2i
Xi
Yi
y3i-1
y3i
x3i-1
x3i

[Fig. 41]

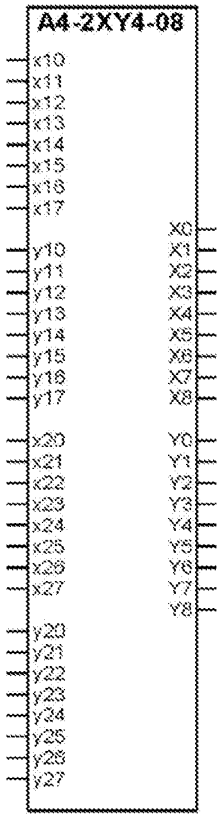
A4-2XY4-08
x10
x11
x12
x13
x14
x15
x16
x17
y10
y11
y12
y13
y14
y15
y16
y17
x20
x21
x22
x23
x24
x25
x26
x27
y20
y21
y22
y23
y24
y25
y26
y27
X0
X1
X2
X3
X4
X5
X6
X7
X8
Y0
Y1
Y2
Y3
Y4
Y5
Y6
Y7
Y8

[Fig. 42]

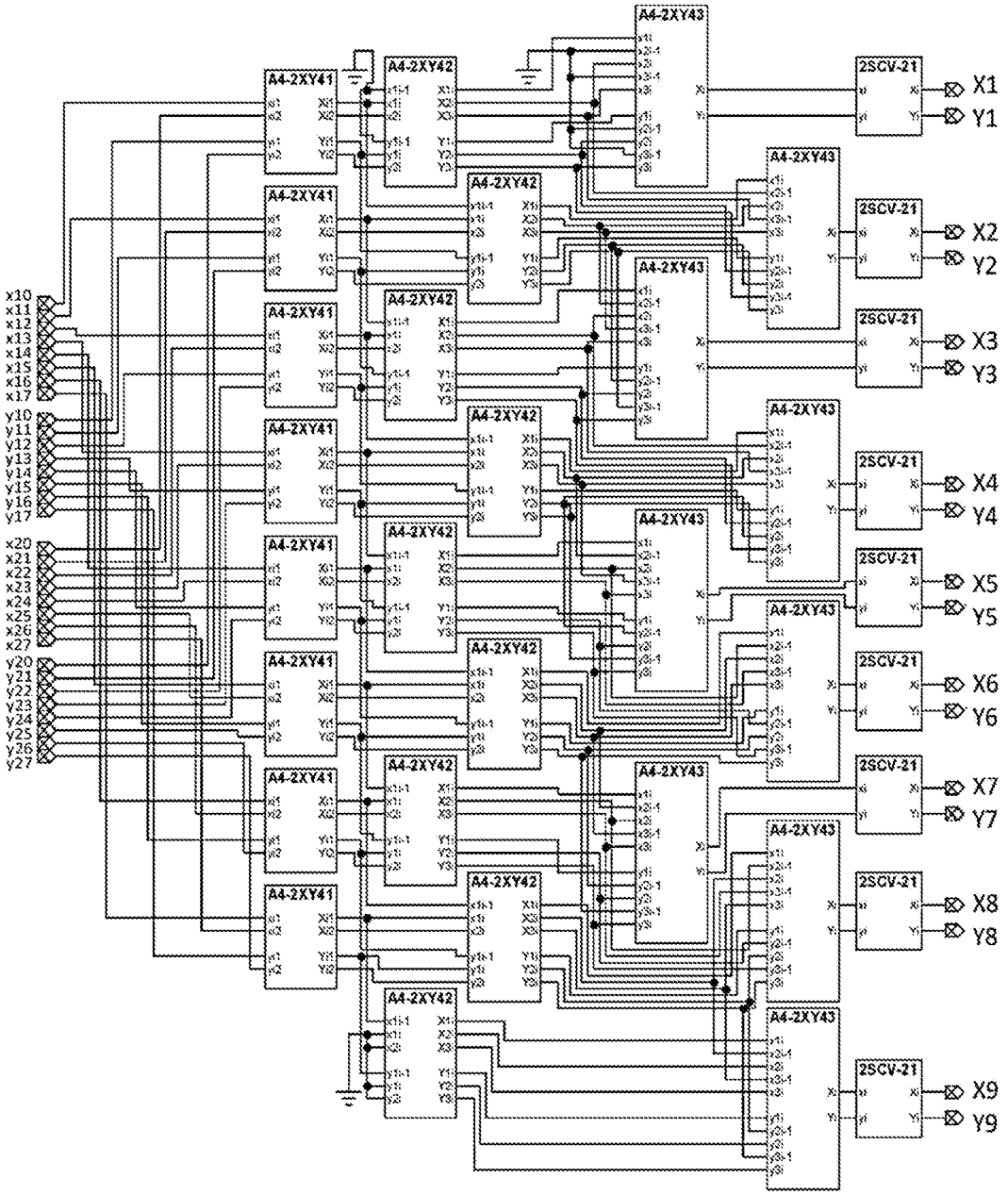
A4-2XY41
A4-2XY42
A4-2XY43
2SCV-21
X1
Y1
X2
Y2
X3
Y3
X4
Y4
X5
Y5
X6
Y6
X7
Y7
X8
Y8
X9
Y9
x10
x11
x12
x13
x14
x15
x16
x17
y10
y11
y12
y13
y14
y15
y16
y17
x20
x21
x22
x23
x24
x25
x26
x27
y20
y21
y22
y23
y24
y25
y26
y27

[Fig. 43]

Input				Output	Input				Output
$(x_i'')_1$	$(x_{i-1}'')_1$	$(x_i'')_2$	$(x_{i-1}'')_2$	x_i'''	$(y_i'')_1$	$(y_{i-1}'')_1$	$(y_i'')_2$	$(y_{i-1}'')_2$	y_i'''
0	0	0	0	0	0	0	0	0	0
0	0	0	1	0	0	0	0	$\bar{1}$	0
0	0	1	0	1	0	0	$\bar{1}$	0	$\bar{1}$
0	0	1	1	*	0	0	$\bar{1}$	$\bar{1}$	$\bar{1}$
0	1	0	0	0	0	$\bar{1}$	0	0	0
0	1	0	1	1	0	$\bar{1}$	0	$\bar{1}$	$\bar{1}$
0	1	1	0	1	0	$\bar{1}$	$\bar{1}$	0	$\bar{1}$
0	1	1	1	*	0	$\bar{1}$	$\bar{1}$	$\bar{1}$	*
1	0	0	0	1	$\bar{1}$	0	0	0	$\bar{1}$
1	0	0	1	1	$\bar{1}$	0	0	$\bar{1}$	$\bar{1}$
1	0	1	0	0	$\bar{1}$	0	$\bar{1}$	0	0
1	0	1	1	*	$\bar{1}$	0	$\bar{1}$	$\bar{1}$	0
1	1	0	0	1	$\bar{1}$	$\bar{1}$	0	0	*
1	1	0	1	*	$\bar{1}$	$\bar{1}$	0	$\bar{1}$	*
1	1	1	0	0	$\bar{1}$	$\bar{1}$	$\bar{1}$	0	*
1	1	1	1	*	$\bar{1}$	$\bar{1}$	$\bar{1}$	$\bar{1}$	*

*Impossible inputs

[Fig. 44]

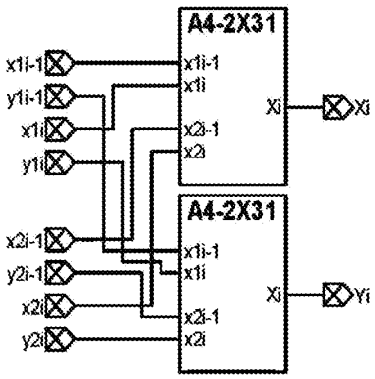

[Fig. 45]

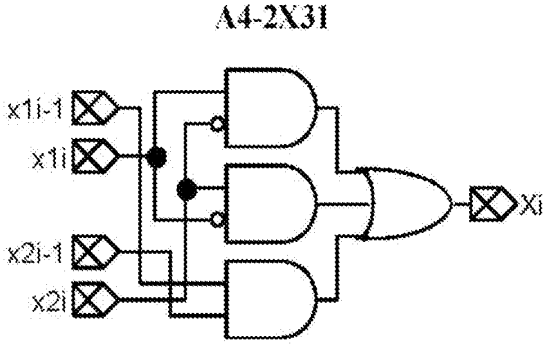

[Fig. 46]

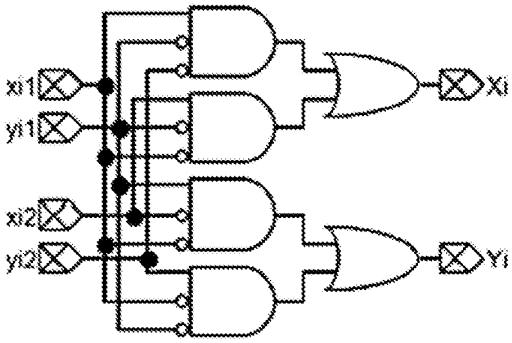

[Fig. 47]

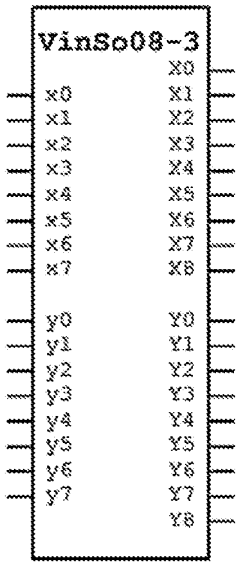

[Fig. 48]

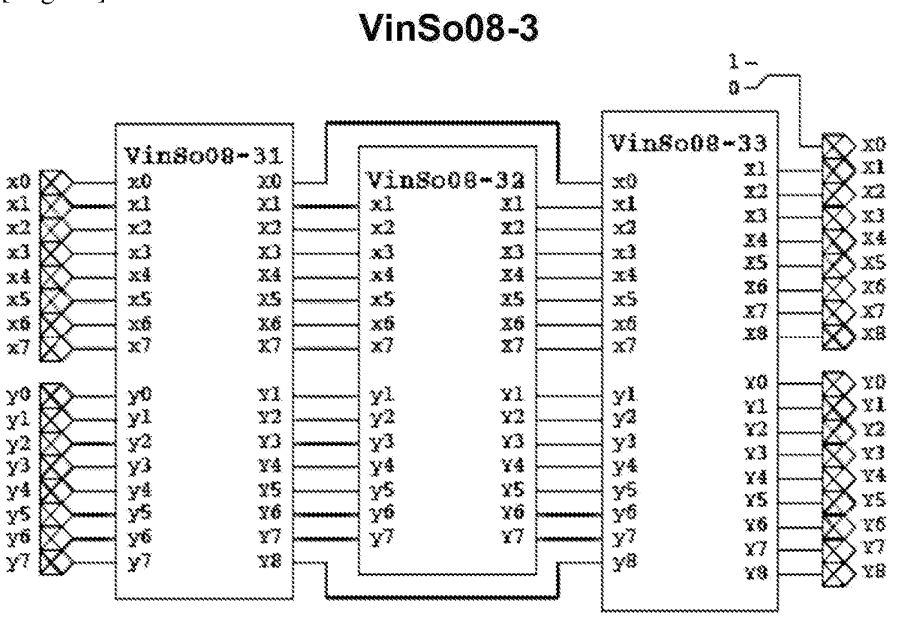

[Fig. 50]

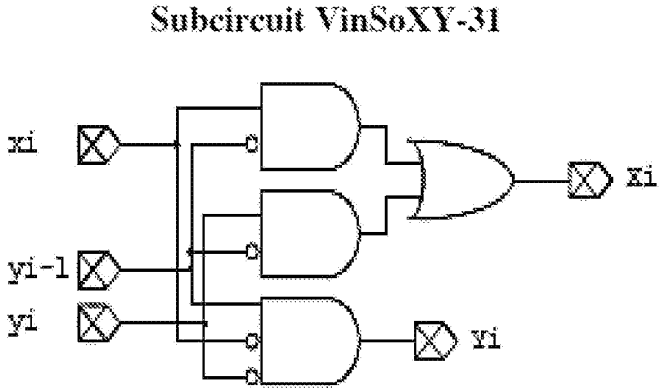

[Fig. 49]

VinSo08-31

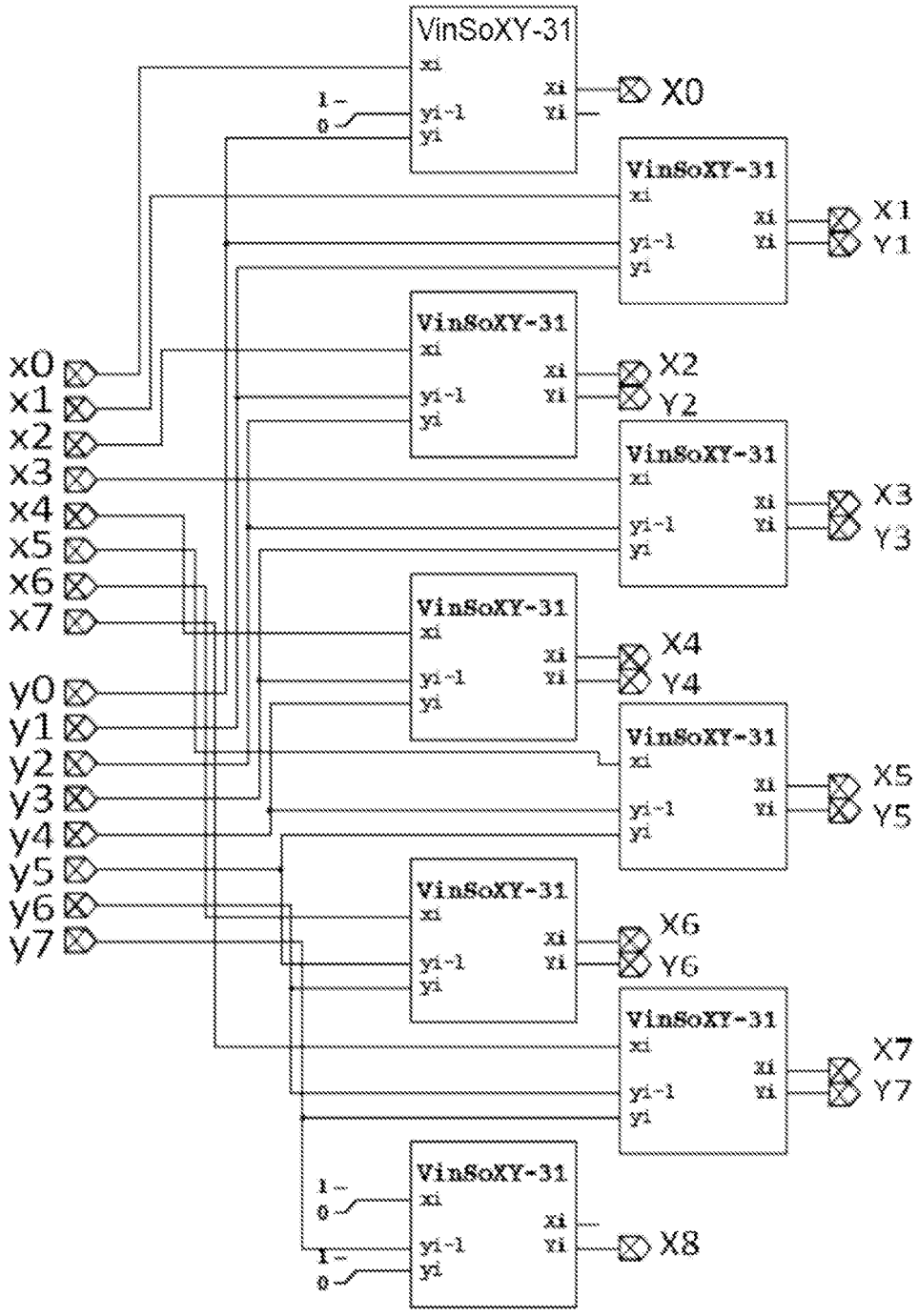

[Fig. 51]

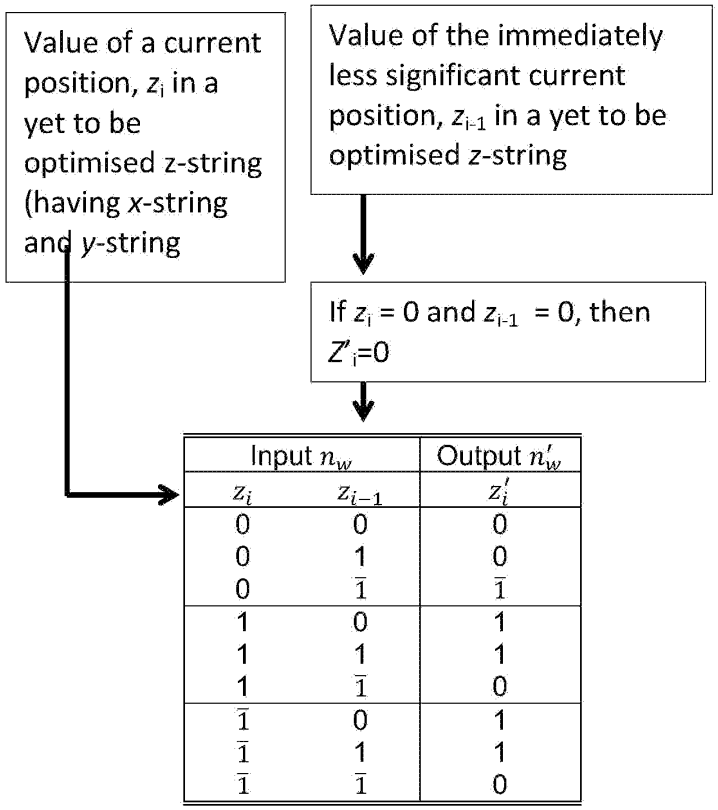

Input n_w		Output n'_w
z_i	z_{i-1}	z'_i
0	0	0
0	1	0
0	$\bar{1}$	$\bar{1}$
1	0	1
1	1	1
1	$\bar{1}$	0
$\bar{1}$	0	1
$\bar{1}$	1	1
$\bar{1}$	$\bar{1}$	0

[Fig. 52]

VinSo08-32

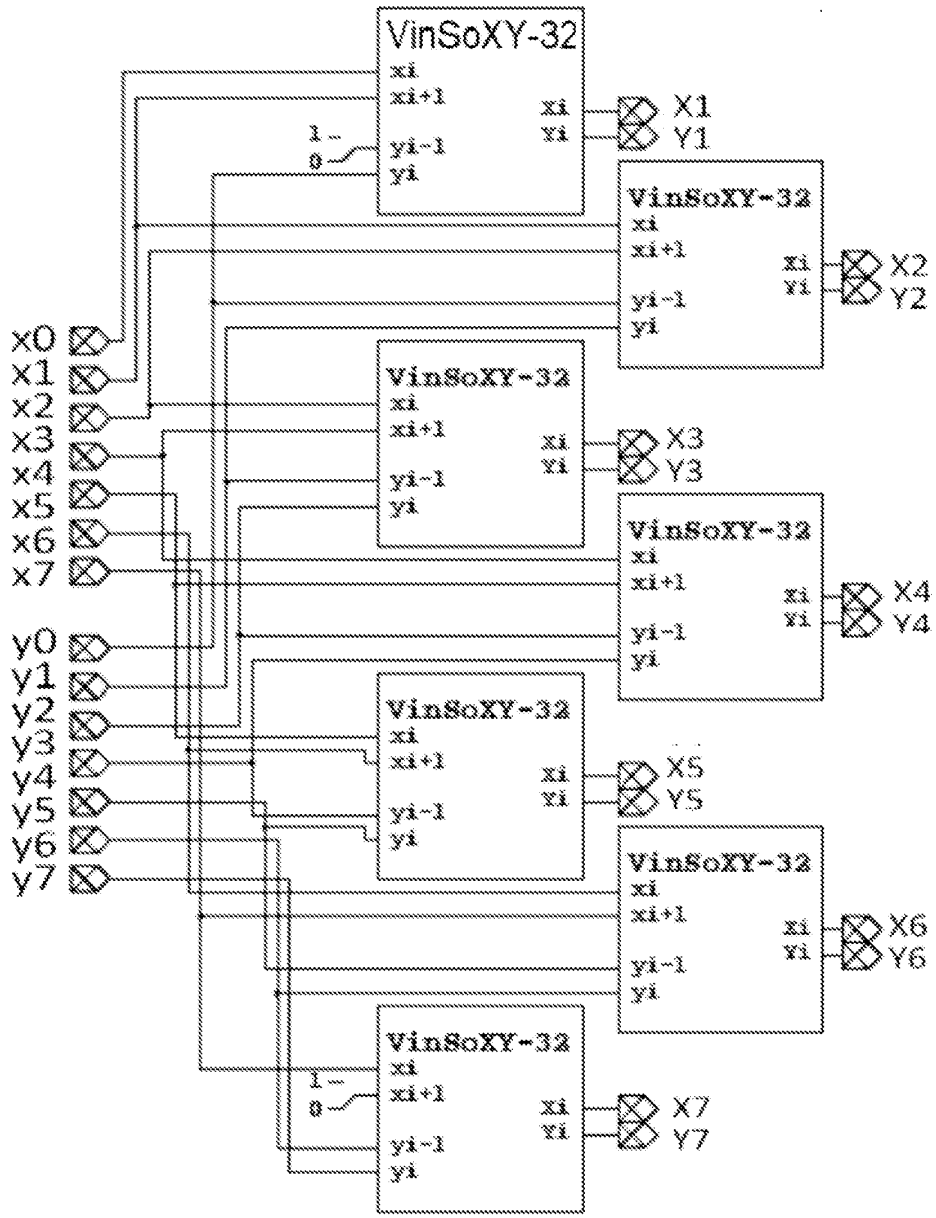

[Fig. 53]

VinSoXY-32

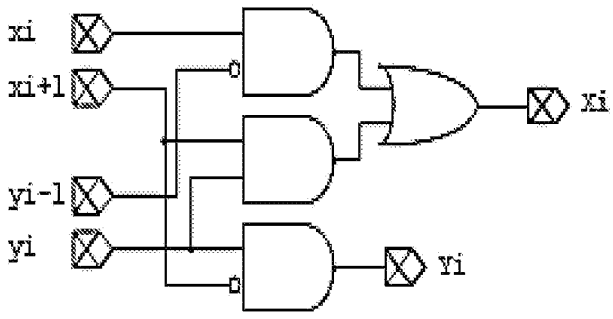

[Fig. 54]

n'_w			n''_w	n'_w			n''_w	n'_w			n''_w
z'_{i+1}	z'_i	z'_{i-1}	z''_i	z'_{i+1}	z'_i	z'_{i-1}	z''_i	z'_{i+1}	z'_i	z'_{i-1}	z''_i
0	0	0	0	1	0	0	0	$\bar{1}$	0	0	0
0	0	1	0	1	0	1	0	$\bar{1}$	0	1	0
0	0	$\bar{1}$	0	1	0	$\bar{1}$	0	$\bar{1}$	0	$\bar{1}$	0
0	1	0	1	1	1	0	1	$\bar{1}$	1	0	1
0	1	1	1	1	1	1	1	$\bar{1}$	1	1	1
0	1	$\bar{1}$	0	1	1	$\bar{1}$	0	$\bar{1}$	1	$\bar{1}$	0
0	$\bar{1}$	0	$\bar{1}$	1	$\bar{1}$	0	1	$\bar{1}$	$\bar{1}$	0	*
0	$\bar{1}$	1	$\bar{1}$	1	$\bar{1}$	1	1	$\bar{1}$	$\bar{1}$	1	*
0	$\bar{1}$	$\bar{1}$	*	1	$\bar{1}$	$\bar{1}$	*	$\bar{1}$	$\bar{1}$	$\bar{1}$	*

Note: $*$ indicates impossible inputs as strings of $\bar{1}$ have been eliminated

[Fig. 55]

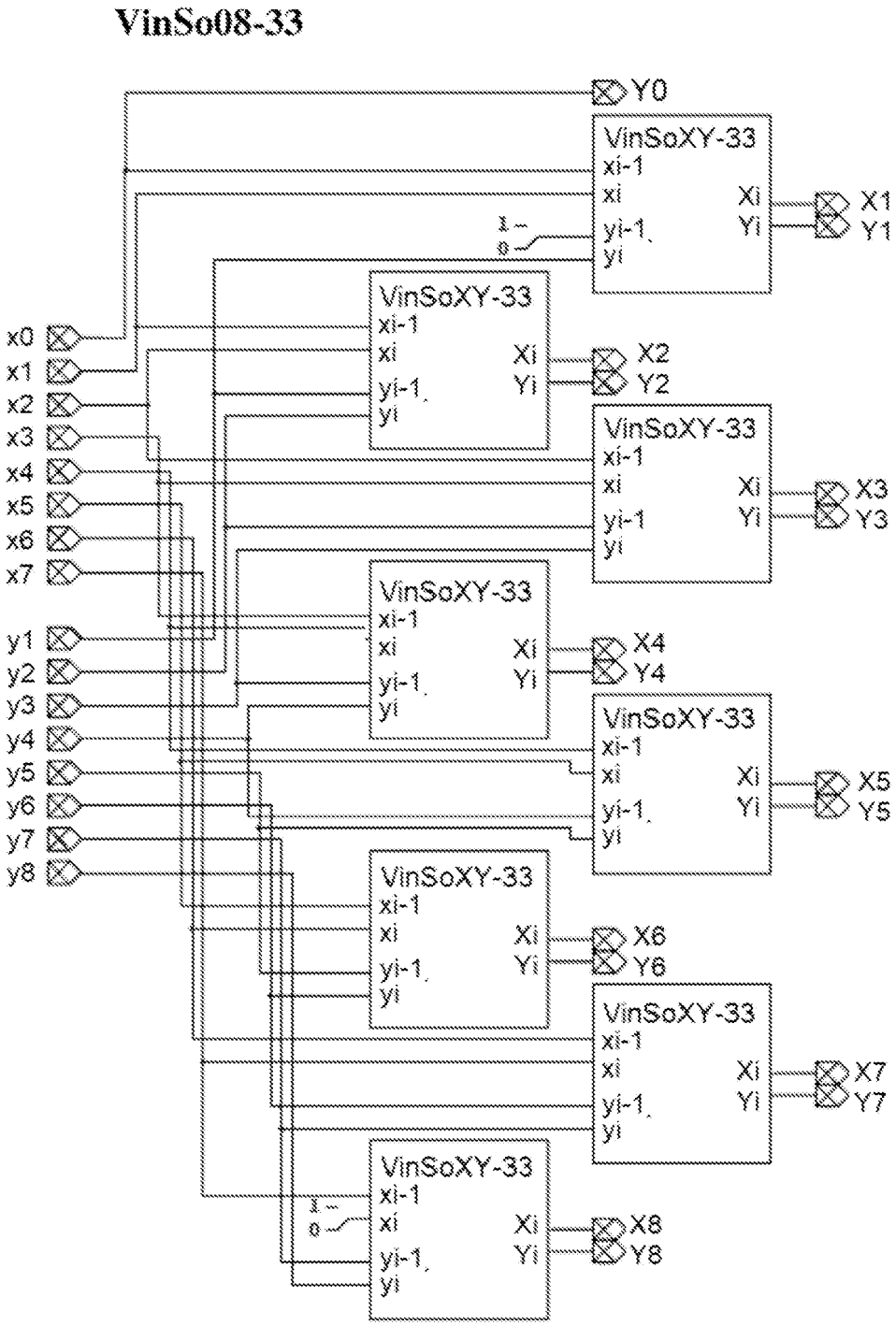
VinSo08-33
Y0
VinSoXY-33
xi-1
xi
yi-1
yi
Xi
Yi
X1
Y1
1
0
x0
x1
x2
x3
x4
x5
x6
x7
y1
y2
y3
y4
y5
y6
y7
y8
X2
Y2
X3
Y3
X4
Y4
X5
Y5
X6
Y6
X7
Y7
X8
Y8

[Fig. 56]

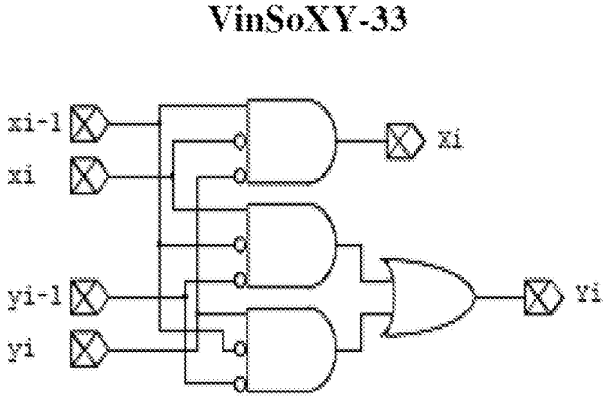

[Fig. 57]

Input n''_w		Output $\tilde{N}_w$
z''_i	z''_{i-1}	$\tilde{Z}_i$
0	0	0
0	1	1
0	$\bar{1}$	0
1	0	$\bar{1}$
1	1	0
1	$\bar{1}$	*
$\bar{1}$	0	$\bar{1}$
$\bar{1}$	1	0
$\bar{1}$	$\bar{1}$	*

Note: * indicates impossible inputs as strings of $1\bar{1}$ and $\overline{11}$ $\bar{1}\bar{1}$ have been eliminated.

[Fig. 58]

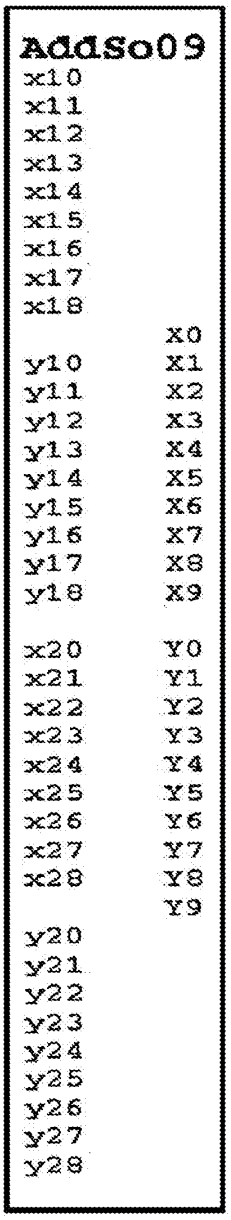
AddSo09
x10
x11
x12
x13
x14
x15
x16
x17
x18
X0
y10 X1
y11 X2
y12 X3
y13 X4
y14 X5
y15 X6
y16 X7
y17 X8
y18 X9
x20 Y0
x21 Y1
x22 Y2
x23 Y3
x24 Y4
x25 Y5
x26 Y6
x27 Y7
x28 Y8
Y9
y20
y21
y22
y23
y24
y25
y26
y27
y28

[Fig. 59]

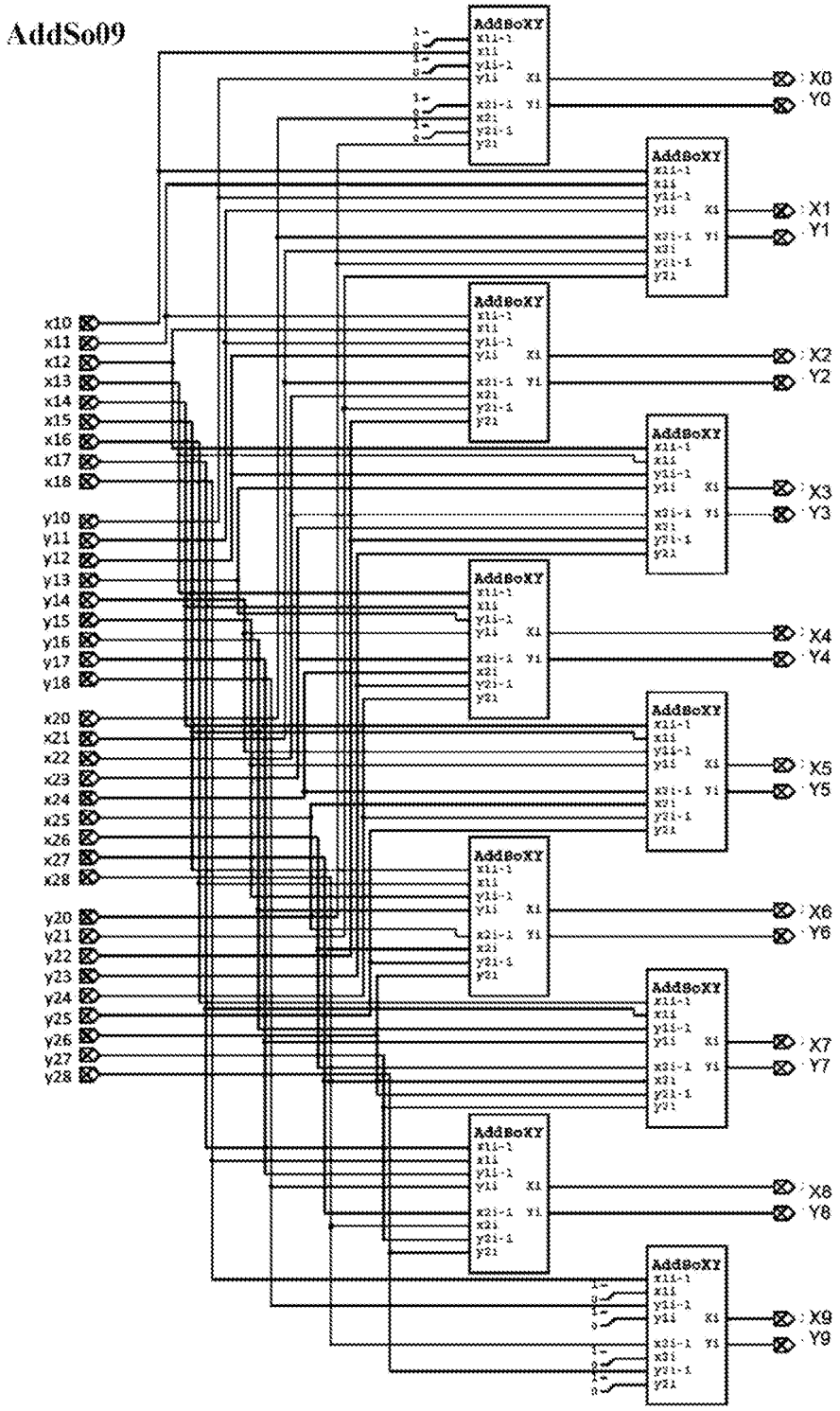
AddSo09
AddBoXY
x10
x11
x12
x13
x14
x15
x16
x17
x18
y10
y11
y12
y13
y14
y15
y16
y17
y18
x20
x21
x22
x23
x24
x25
x26
x27
x28
y20
y21
y22
y23
y24
y25
y26
y27
y28
X0
Y0
X1
Y1
X2
Y2
X3
Y3
X4
Y4
X5
Y5
X6
Y6
X7
Y7
X8
Y8
X9
Y9

[Fig. 60]

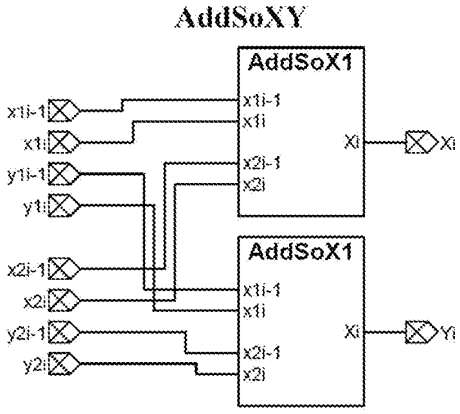

[Fig. 61]

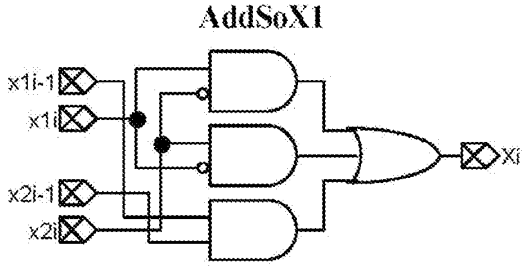

[Fig. 62]

Input*				Output	Input*				Output
$(x_i)_1$	$(x_{i-1})_1$	$(x_i)_2$	$(x_{i-1})_2$	x_i'	$(y_i)_1$	$(y_{i-1})_1$	$(y_i)_2$	$(y_{i-1})_2$	y_i'
0	0	0	0	0	0	0	0	0	0
		0	1	0			0	$\bar{1}$	0
		1	0	1			$\bar{1}$	0	$\bar{1}$
0	1	0	0	0	0	$\bar{1}$	0	0	0
		0	1	1			0	$\bar{1}$	$\bar{1}$
		1	0	1			$\bar{1}$	0	$\bar{1}$
1	0	0	0	1	$\bar{1}$	0	0	0	$\bar{1}$
		0	1	1			0	$\bar{1}$	$\bar{1}$
		1	0	0			$\bar{1}$	0	0

*Inputs for 11 and $\bar{1}\bar{1}$ are impossible because these are semi-optimized binary numbers.

[Fig. 63]

Input		Output
$(z_i)_1$	$(z_j)_2$	$(Z_i')_j$
0	0	0
1	0	0
$\bar{1}$	0	0
0	1	0
1	1	1
$\bar{1}$	1	$\bar{1}$
0	$\bar{1}$	0
1	$\bar{1}$	$\bar{1}$
$\bar{1}$	$\bar{1}$	1

[Fig. 64]

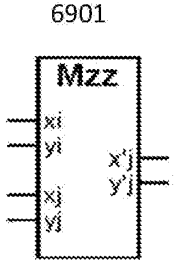

[Fig. 65]

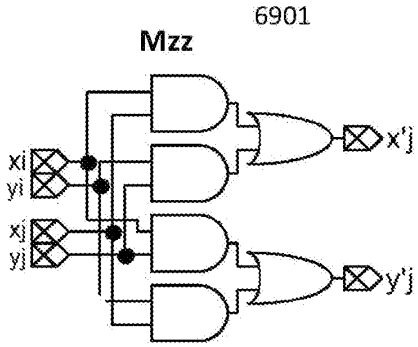

[Fig. 66]

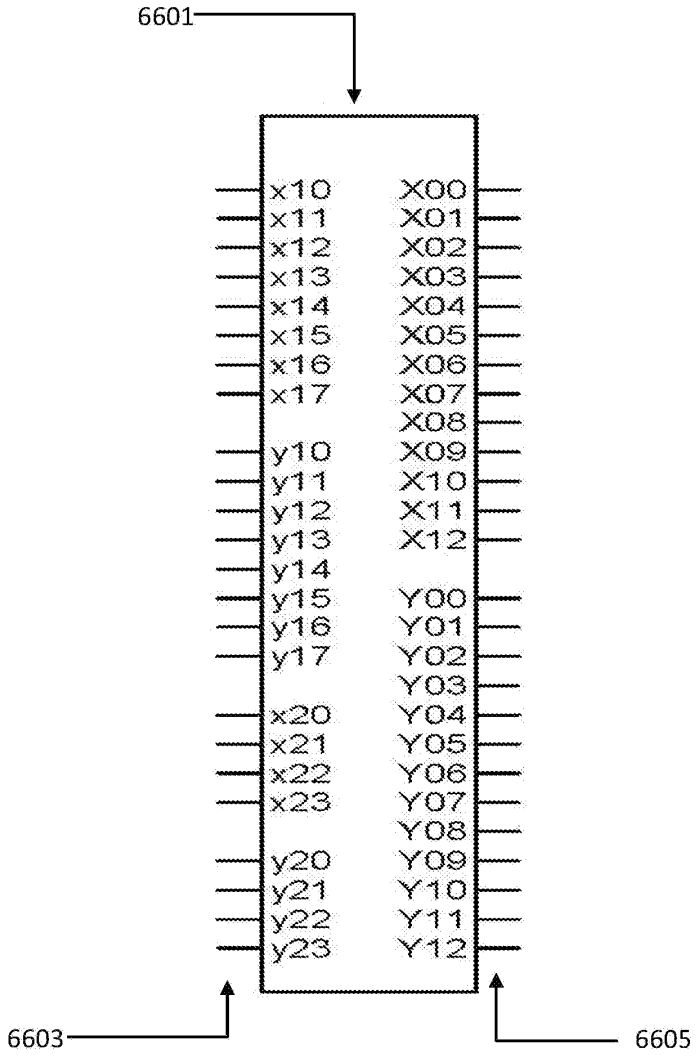
6601
x10
x11
x12
x13
x14
x15
x16
x17
y10
y11
y12
y13
y14
y15
y16
y17
x20
x21
x22
x23
y20
y21
y22
y23
X00
X01
X02
X03
X04
X05
X06
X07
X08
X09
X10
X11
X12
Y00
Y01
Y02
Y03
Y04
Y05
Y06
Y07
Y08
Y09
Y10
Y11
Y12
6603
6605

[Fig. 67]

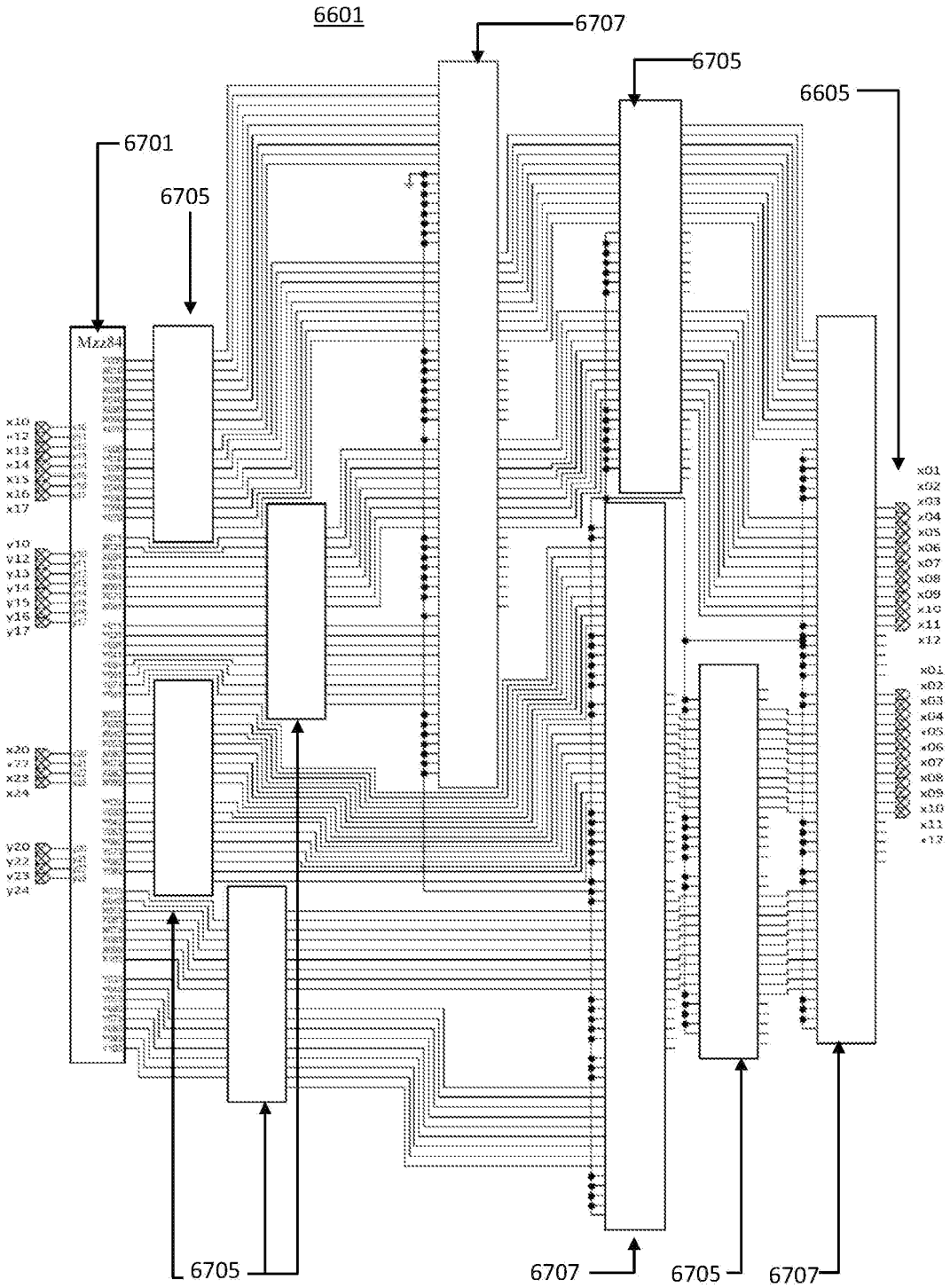

[Fig. 68]

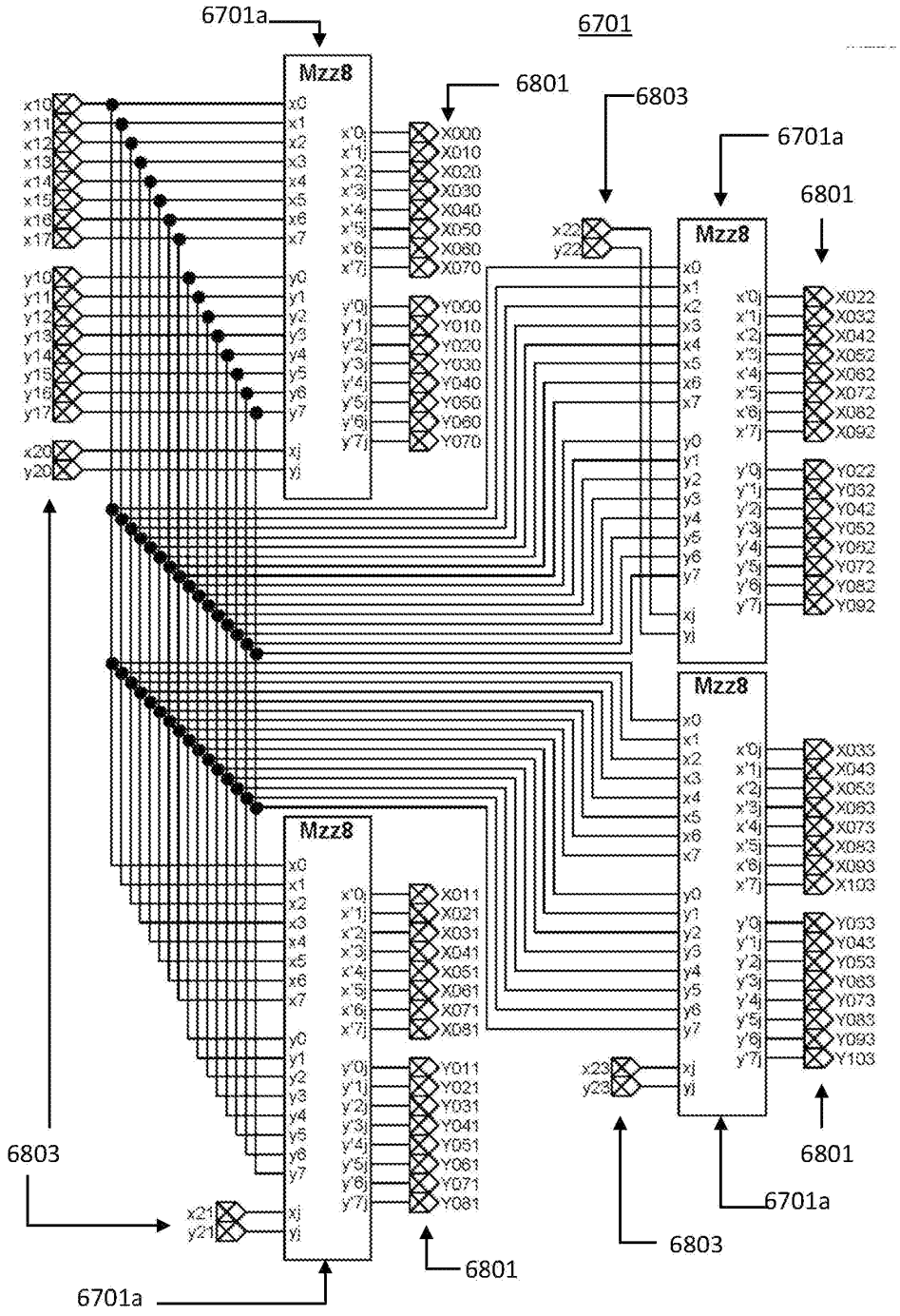
6701a
6701
Mzz8
6801
6803
6701a
6801
Mzz8
Mzz8
Mzz8
6803
6801
6701a
6803
6801
6701a

[Fig. 69]

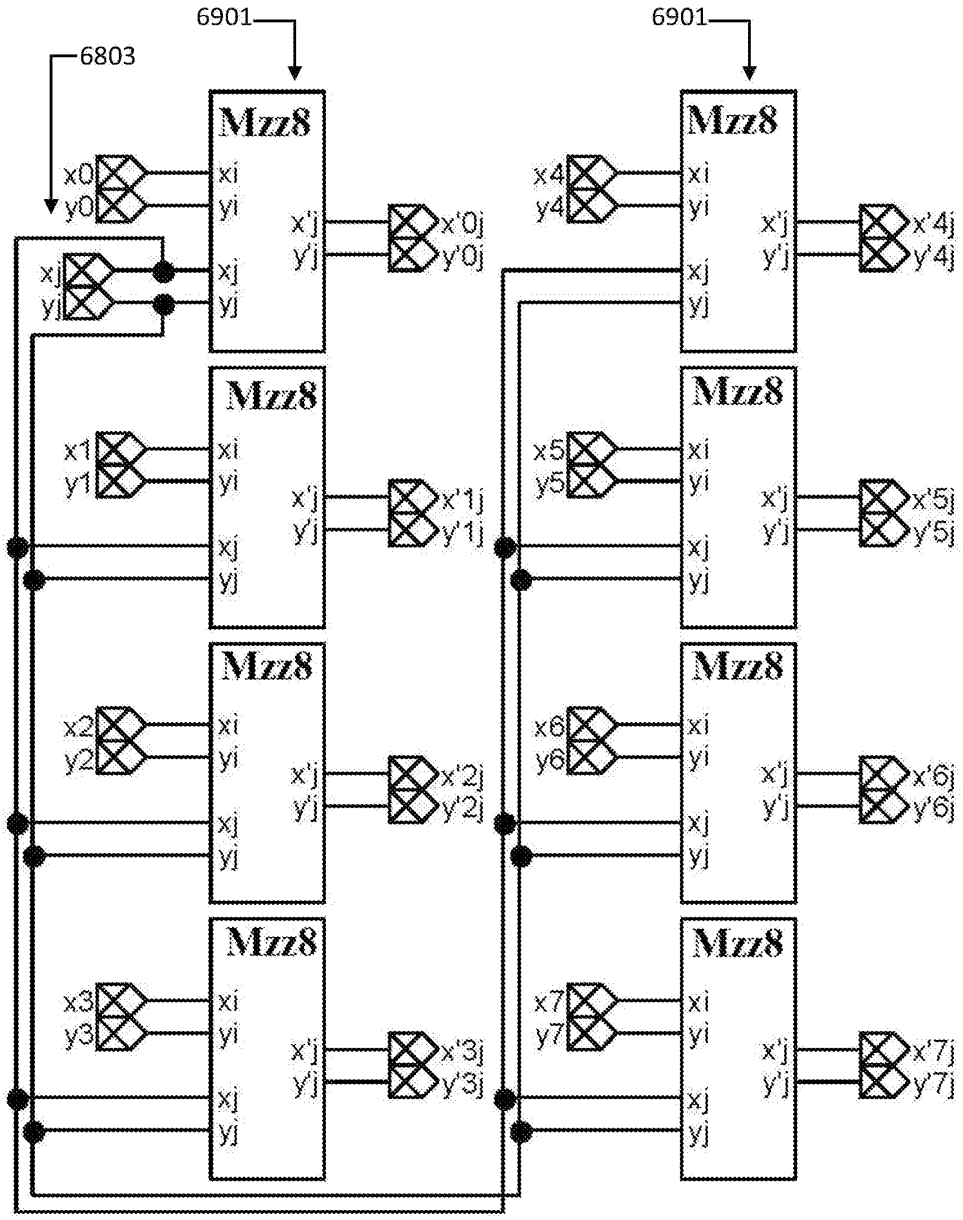

[Fig. 70]

$(\tilde{z}_{i+1})_2$	$(\tilde{z}_i)_2$	$(\tilde{z}'_{i+1})_2$	$(\tilde{z}'_i)_2$	
0	0	0	0	
0	1	0	1	
0	$\bar{1}$	0	$\bar{1}$	
1	0	1	0	
1	1	Impossible		
1	$\bar{1}$	0	1	← rSEPx
$\bar{1}$	0	$\bar{1}$	0	
$\bar{1}$	1	0	$\bar{1}$	← rSEPx
$\bar{1}$	$\bar{1}$	Impossible		

[Fig. 71]

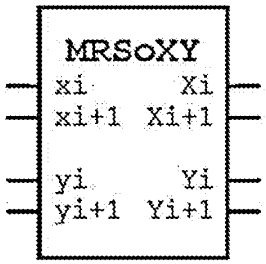

[Fig. 72]

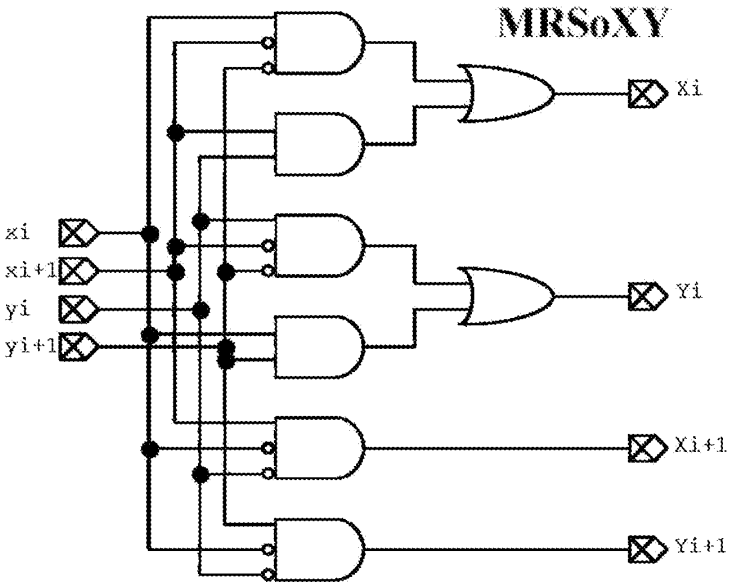

[Fig. 73]

Input		Output
$(z_i)_1$	$(x_j)_2$	$(z_i')_j$
0	0	0
1	0	0
$\bar{1}$	0	0
0	1	0
1	1	1
$\bar{1}$	1	$\bar{1}$

[Fig. 74]

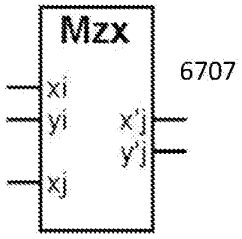

[Fig. 75]

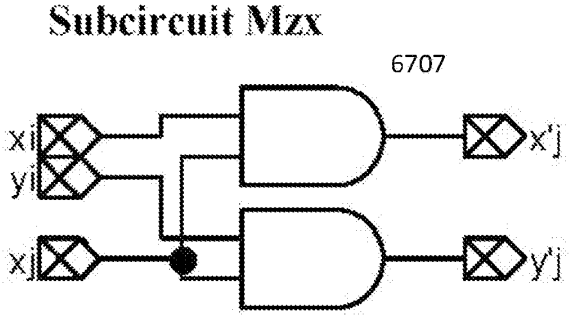
Subcircuit Mzx
6707
xj
yj
xj
x'j
y'j

[Fig. 76]

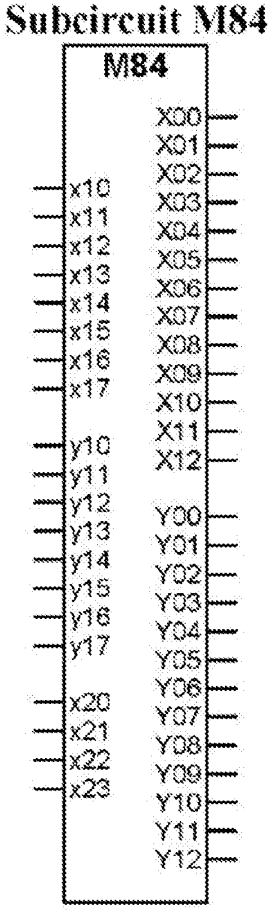
Subcircuit M84
M84
x10
x11
x12
x13
x14
x15
x16
x17
y10
y11
y12
y13
y14
y15
y16
y17
x20
x21
x22
x23
X00
X01
X02
X03
X04
X05
X06
X07
X08
X09
X10
X11
X12
Y00
Y01
Y02
Y03
Y04
Y05
Y06
Y07
Y08
Y09
Y10
Y11
Y12

[Fig. 77]

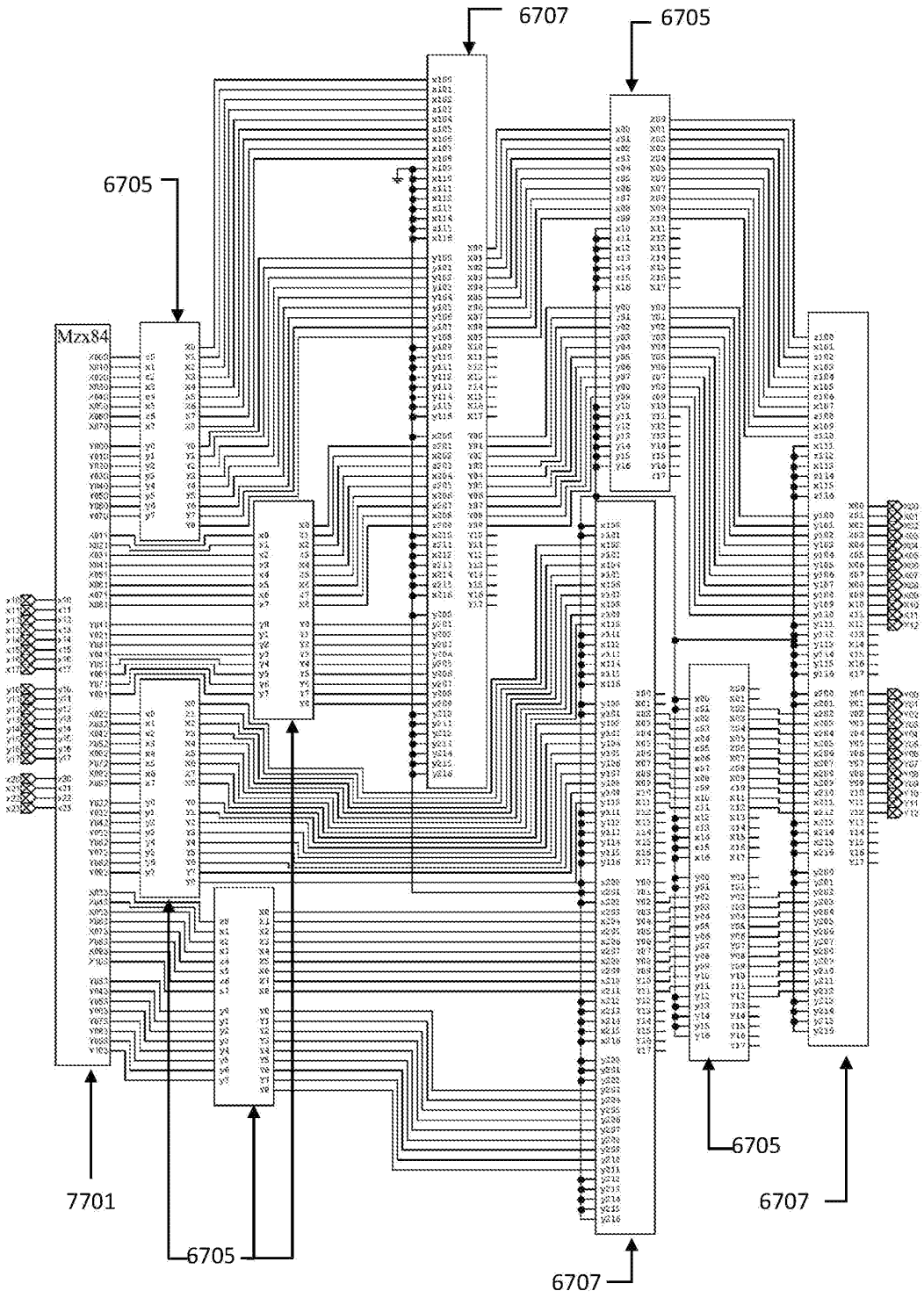

[Fig. 78]

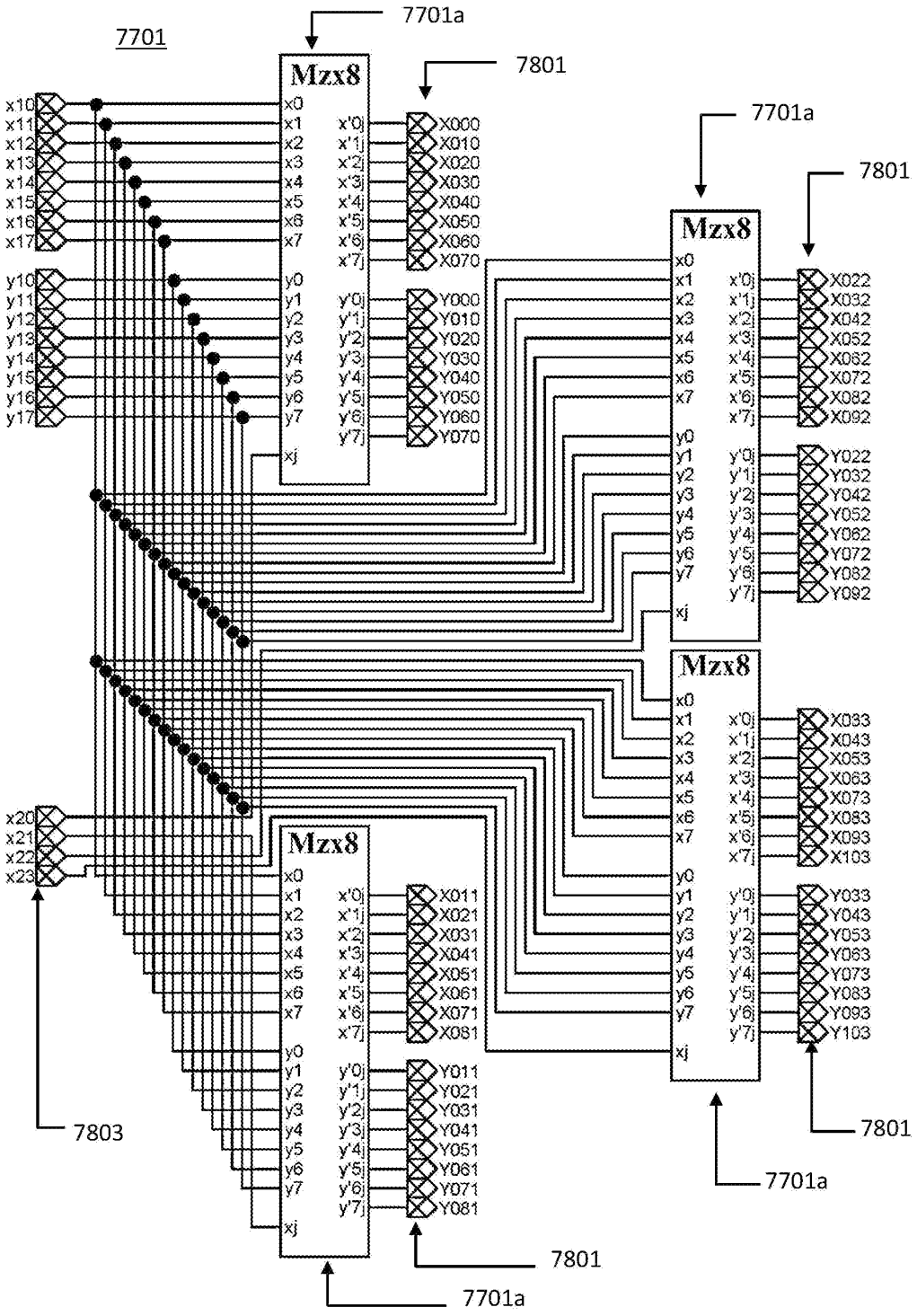
7701
7701a
7801
Mzx8
x10
x11
x12
x13
x14
x15
x16
x17
y10
y11
y12
y13
y14
y15
y16
y17
x0
x1
x2
x3
x4
x5
x6
x7
y0
y1
y2
y3
y4
y5
y6
y7
xj
x'0j
x'1j
x'2j
x'3j
x'4j
x'5j
x'6j
x'7j
y'0j
y'1j
y'2j
y'3j
y'4j
y'5j
y'6j
y'7j
X000
X010
X020
X030
X040
X050
X060
X070
Y000
Y010
Y020
Y030
Y040
Y050
Y060
Y070
X022
X032
X042
X052
X062
X072
X082
X092
Y022
Y032
Y042
Y052
Y062
Y072
Y082
Y092
X033
X043
X053
X063
X073
X083
X093
X103
Y033
Y043
Y053
Y063
Y073
Y083
Y093
Y103
X011
X021
X031
X041
X051
X061
X071
X081
Y011
Y021
Y031
Y041
Y051
Y061
Y071
Y081
x20
x21
x22
x23
7803

[Fig. 79]

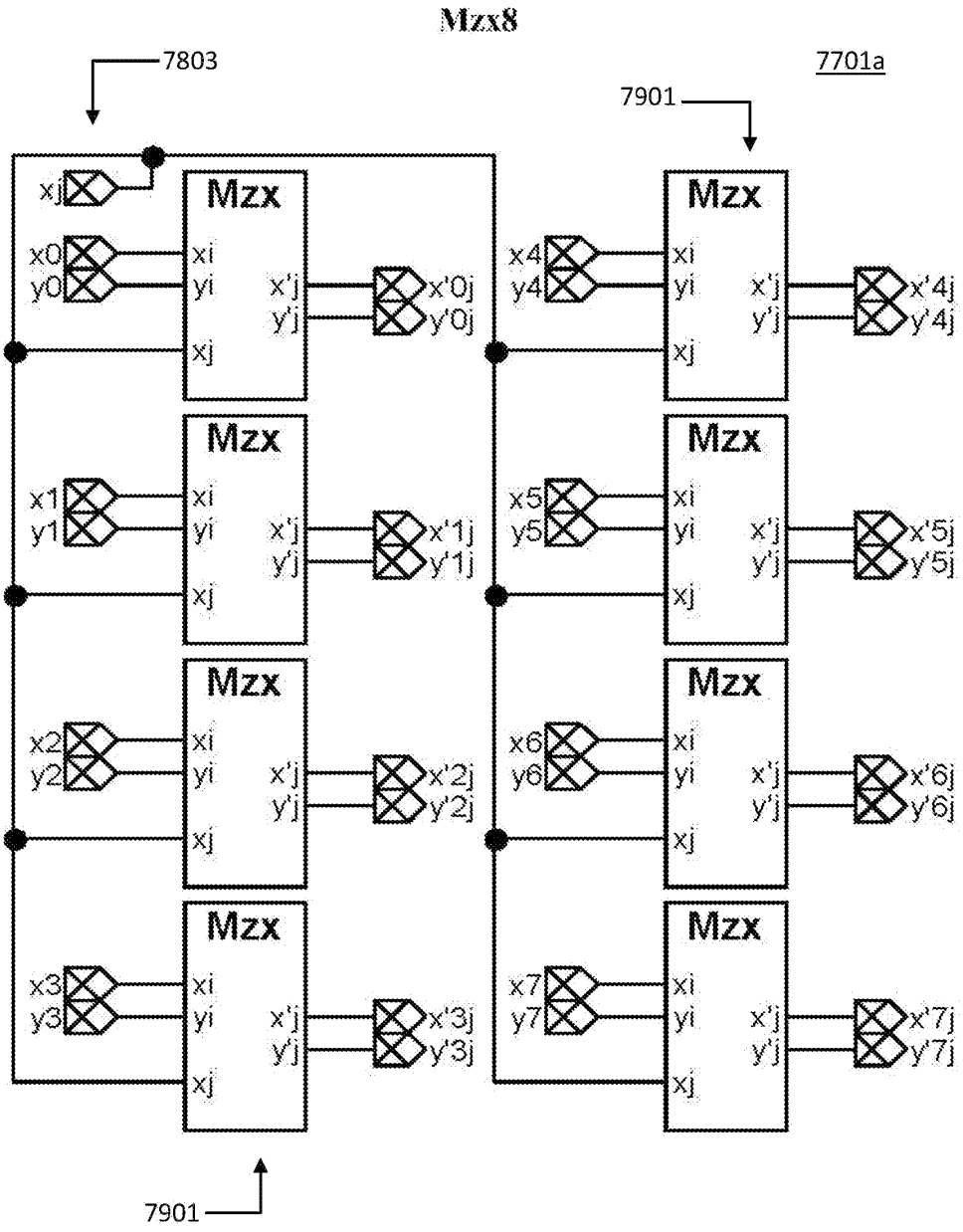
Mzx8
7803
7701a
7901
Mzx
xj
x0
y0
x4
y4
x1
y1
x5
y5
x2
y2
x6
y6
x3
y3
x7
y7
xi
yi
xj
x'j
y'j
x'0j
y'0j
x'4j
y'4j
x'1j
y'1j
x'5j
y'5j
x'2j
y'2j
x'6j
y'6j
x'3j
y'3j
x'7j
y'7j
7901

[Fig. 80]

n_w			$\widetilde{N}_w^1$	n_w			$\widetilde{N}_w^1$	n_w			$\widetilde{N}_w^1$
z_i	z_{i-1}	z_{i-2}	$\widetilde{Z}_i^1$	z_i	z_{i-1}	z_{i-2}	$\widetilde{Z}_i^1$	z_i	z_{i-1}	z_{i-2}	$\widetilde{Z}_i^1$
0	0	0	0	0	0	1	0	0	0	$\bar{1}$	0
0	1	0	1	0	1	1	1	0	1	$\bar{1}$	0
0	$\bar{1}$	0	$\bar{1}$	0	$\bar{1}$	1	0	0	$\bar{1}$	$\bar{1}$	$\bar{1}$
1	0	0	$\bar{1}$	1	0	1	$\bar{1}$	1	0	$\bar{1}$	$\bar{1}$
1	1	0	0	1	1	1	0	1	1	$\bar{1}$	$\bar{1}$
1	$\bar{1}$	0	0	1	$\bar{1}$	1	1	1	$\bar{1}$	$\bar{1}$	0
$\bar{1}$	0	0	1	$\bar{1}$	0	1	1	$\bar{1}$	0	$\bar{1}$	1
$\bar{1}$	1	0	0	$\bar{1}$	1	1	0	$\bar{1}$	1	$\bar{1}$	$\bar{1}$
$\bar{1}$	$\bar{1}$	0	0	$\bar{1}$	$\bar{1}$	1	1	$\bar{1}$	$\bar{1}$	$\bar{1}$	0

[Fig. 81]

n_w			$\widetilde{N}_w^2$	n_w			$\widetilde{N}_w^2$	n_w			$\widetilde{N}_w^2$
z_i	z_{i-1}	z_{i-2}	$\widetilde{Z}_i^2$	z_i	z_{i-1}	z_{i-2}	$\widetilde{Z}_i^2$	z_i	z_{i-1}	z_{i-2}	$\widetilde{Z}_i^2$
0	0	0	0	0	0	1	0	0	0	$\bar{1}$	0
0	1	0	0	0	1	1	1	0	1	$\bar{1}$	0
0	$\bar{1}$	0	0	0	$\bar{1}$	1	0	0	$\bar{1}$	$\bar{1}$	$\bar{1}$
1	0	0	1	1	0	1	1	1	0	$\bar{1}$	1
1	1	0	$\bar{1}$	1	1	1	*	1	1	$\bar{1}$	$\bar{1}$
1	$\bar{1}$	0	1	1	$\bar{1}$	1	1	1	$\bar{1}$	$\bar{1}$	0
$\bar{1}$	0	0	$\bar{1}$	$\bar{1}$	0	1	$\bar{1}$	$\bar{1}$	0	$\bar{1}$	$\bar{1}$
$\bar{1}$	1	0	$\bar{1}$	$\bar{1}$	1	1	0	$\bar{1}$	1	$\bar{1}$	$\bar{1}$
$\bar{1}$	$\bar{1}$	0	1	$\bar{1}$	$\bar{1}$	1	1	$\bar{1}$	$\bar{1}$	$\bar{1}$	*

* = impossible inputs

[Fig. 82]

n_w				$\widetilde{N}_w$	n_w			$\widetilde{N}_w$
z_i	z_{i-1}	z_{i-2}	z_{i-3}	$\widetilde{Z}_i$	z_i	z_{i-1}	z_{i-2}	$\widetilde{Z}_i$
0	0	0	ϕ	0	0	0	1	0
0	1	0	0	1	0	1	1	1
0	1	0	1	1	0	$\bar{1}$	1	0
0	1	0	$\bar{1}$	0	1	0	1	$\bar{1}$
0	$\bar{1}$	0	0	$\bar{1}$	1	1	1	0
0	$\bar{1}$	0	1	0	1	$\bar{1}$	1	1
0	$\bar{1}$	0	$\bar{1}$	$\bar{1}$	$\bar{1}$	0	1	$\bar{1}$
1	0	0	ϕ	$\bar{1}$	$\bar{1}$	1	1	0
1	1	0	0	0	$\bar{1}$	$\bar{1}$	1	1
1	1	0	1	0	0	0	$\bar{1}$	0
1	1	0	$\bar{1}$	$\bar{1}$	0	1	$\bar{1}$	0
1	$\bar{1}$	0	0	0	0	$\bar{1}$	$\bar{1}$	$\bar{1}$
1	$\bar{1}$	0	1	1	1	0	$\bar{1}$	1
1	$\bar{1}$	0	$\bar{1}$	0	1	1	$\bar{1}$	$\bar{1}$
$\bar{1}$	0	0	ϕ	1	1	$\bar{1}$	$\bar{1}$	0
$\bar{1}$	1	0	0	0	$\bar{1}$	0	$\bar{1}$	1
$\bar{1}$	1	0	1	0	$\bar{1}$	1	$\bar{1}$	$\bar{1}$
$\bar{1}$	1	0	$\bar{1}$	$\bar{1}$	$\bar{1}$	$\bar{1}$	$\bar{1}$	0
$\bar{1}$	$\bar{1}$	0	0	0				
$\bar{1}$	$\bar{1}$	0	1	1				
$\bar{1}$	$\bar{1}$	0	$\bar{1}$	0				

Note: ϕ = does not matter whether 0, 1 or $\bar{1}$

[Fig. 83]

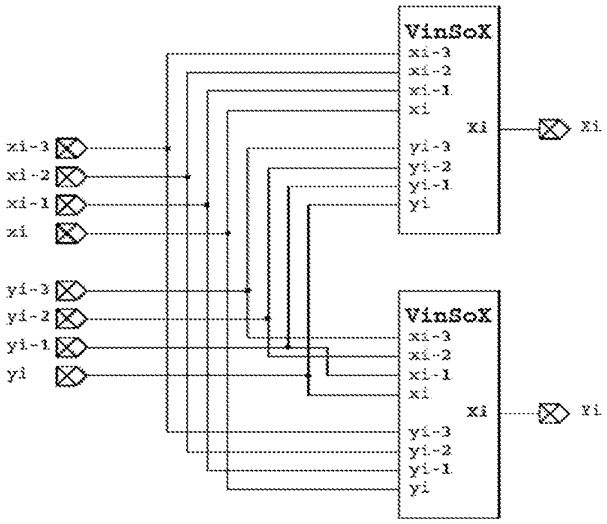

[Fig. 84]

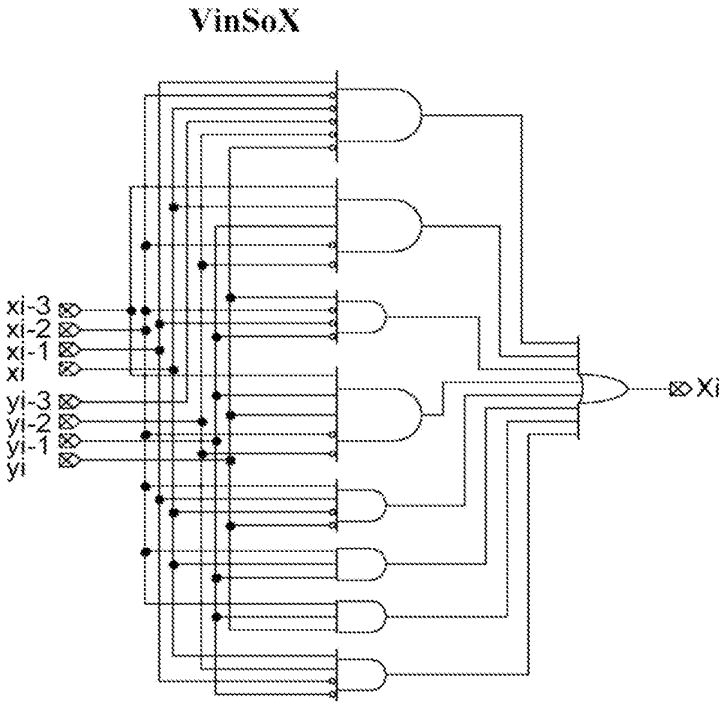
VinSoX
xi-3
xi-2
xi-1
xi
yi-3
yi-2
yi-1
yi
Xi

[Fig. 85]

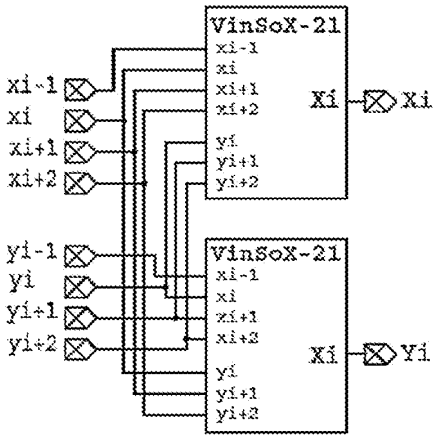
VinSoX-21
xi-1
xi
xi+1
xi+2
yi
yi+1
yi+2
Xi
Xi
xi-1
xi
xi+1
xi+2
yi-1
yi
yi+1
yi+2
VinSoX-21
xi-1
xi
xi+1
xi+2
yi
yi+1
yi+2
Xi
Yi

[Fig. 86]

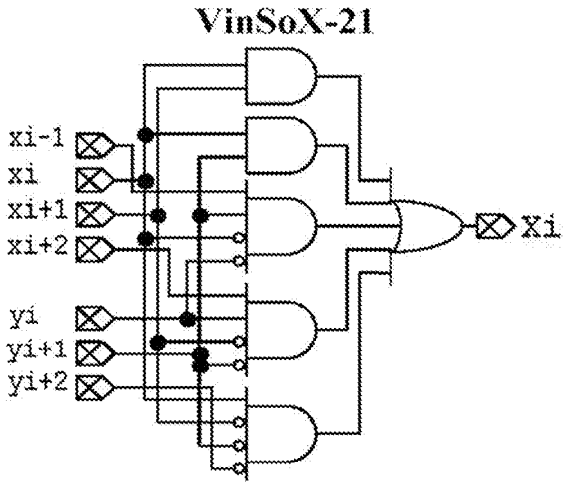

[Fig. 87]

Input n_w				Output n'_w
z_{i+2}	z_{i+1}	z_i	z_{i-1}	z'_i
ϕ	0	0	ϕ	0
0	0	1	ϕ	1
1	0	1	ϕ	1
$\bar{1}$	0	1	ϕ	$\bar{1}$
0	0	$\bar{1}$	ϕ	$\bar{1}$
1	0	$\bar{1}$	ϕ	1
$\bar{1}$	0	$\bar{1}$	ϕ	$\bar{1}$
ϕ	1	0	0	0
ϕ	1	0	1	0
ϕ	1	0	$\bar{1}$	$\bar{1}$
ϕ	1	1	ϕ	1
ϕ	1	$\bar{1}$	ϕ	$\bar{1}$
ϕ	$\bar{1}$	0	0	0
ϕ	$\bar{1}$	0	1	1
ϕ	$\bar{1}$	0	$\bar{1}$	0
ϕ	$\bar{1}$	1	ϕ	1
ϕ	$\bar{1}$	$\bar{1}$	ϕ	$\bar{1}$

ϕ = 0, 1 or $\bar{1}$

[Fig. 88]

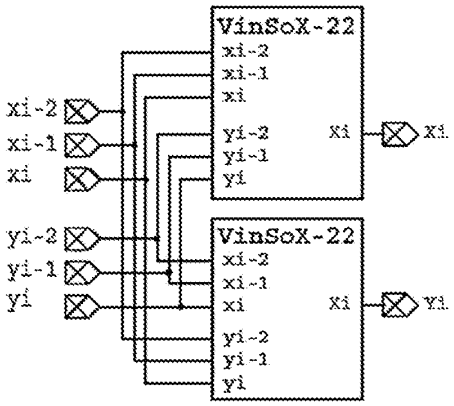

[Fig. 89]

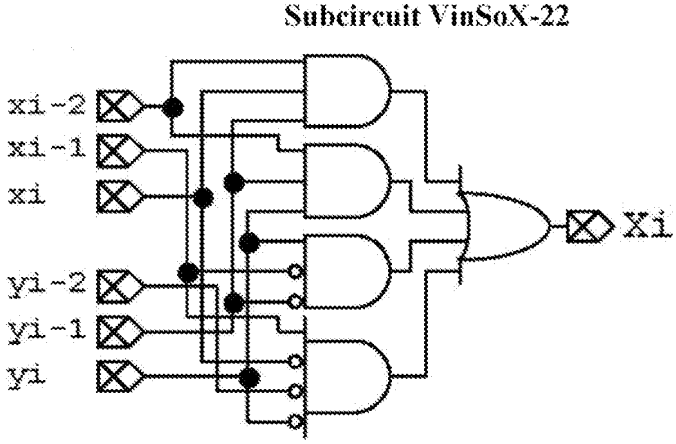

[Fig. 90]

n'_w			$\widetilde{N}_w$	n'_w			$\widetilde{N}_w$	n'_w			$\widetilde{N}_w$
z'_i	z'_{i-1}	z'_{i-2}	$\tilde{Z}_i$	z'_i	z'_{i-1}	z'_{i-2}	$\tilde{Z}_i$	z'_i	z'_{i-1}	z'_{i-2}	$\tilde{Z}_i$
0	0	0	0	1	0	0	$\bar{1}$	$\bar{1}$	0	0	1
0	0	1	0	1	0	1	$\bar{1}$	$\bar{1}$	0	1	*
0	0	$\bar{1}$	0	1	0	$\bar{1}$	*	$\bar{1}$	0	$\bar{1}$	1
0	1	0	1	1	1	0	0	$\bar{1}$	1	0	0
0	1	1	1	1	1	1	0	$\bar{1}$	1	1	0
0	1	$\bar{1}$	0	1	1	$\bar{1}$	$\bar{1}$	$\bar{1}$	1	$\bar{1}$	$\bar{1}$
0	$\bar{1}$	0	$\bar{1}$	1	$\bar{1}$	0	0	$\bar{1}$	$\bar{1}$	0	0
0	$\bar{1}$	1	0	1	$\bar{1}$	1	1	$\bar{1}$	$\bar{1}$	1	1
0	$\bar{1}$	$\bar{1}$	$\bar{1}$	1	$\bar{1}$	$\bar{1}$	0	$\bar{1}$	$\bar{1}$	$\bar{1}$	0

Note: $*$ indicates impossible inputs as $10\bar{1}$ and $\bar{1}01$ have been eliminated.

[Fig. 91]

(a)LimTree for 8-bit multiplication.

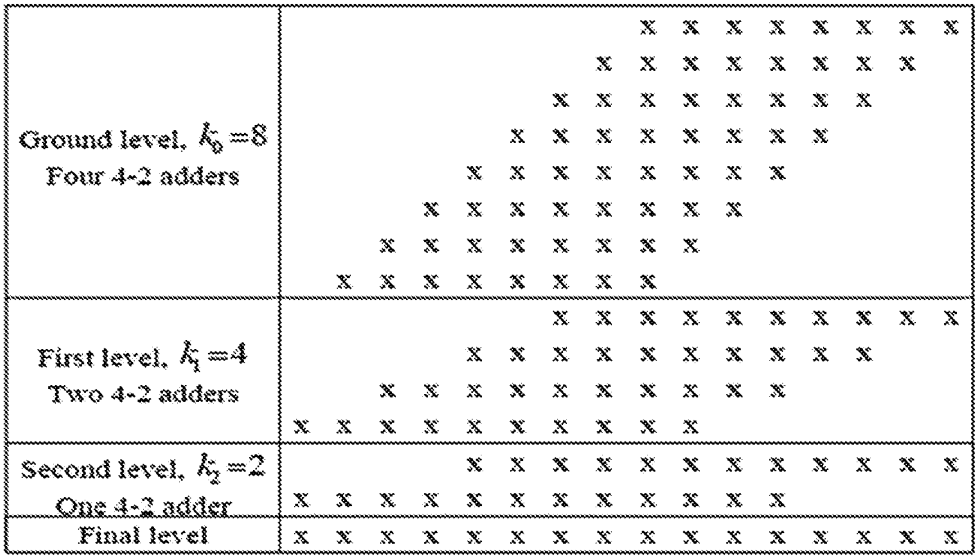

(b)Inverted LimTree for 8-bit multiplication.

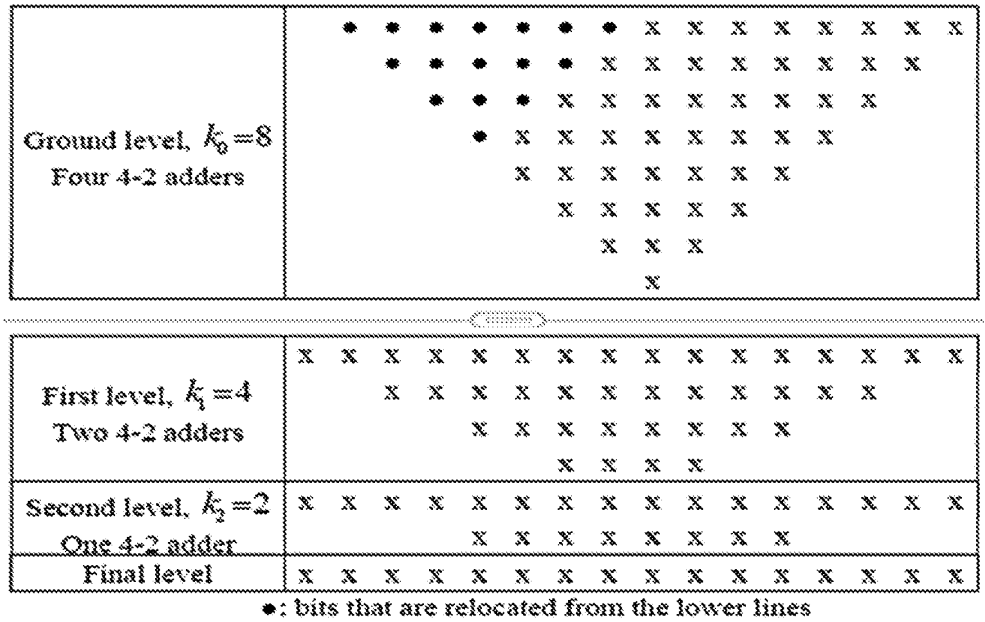

●: bits that are relocated from the lower lines