FIG. 1

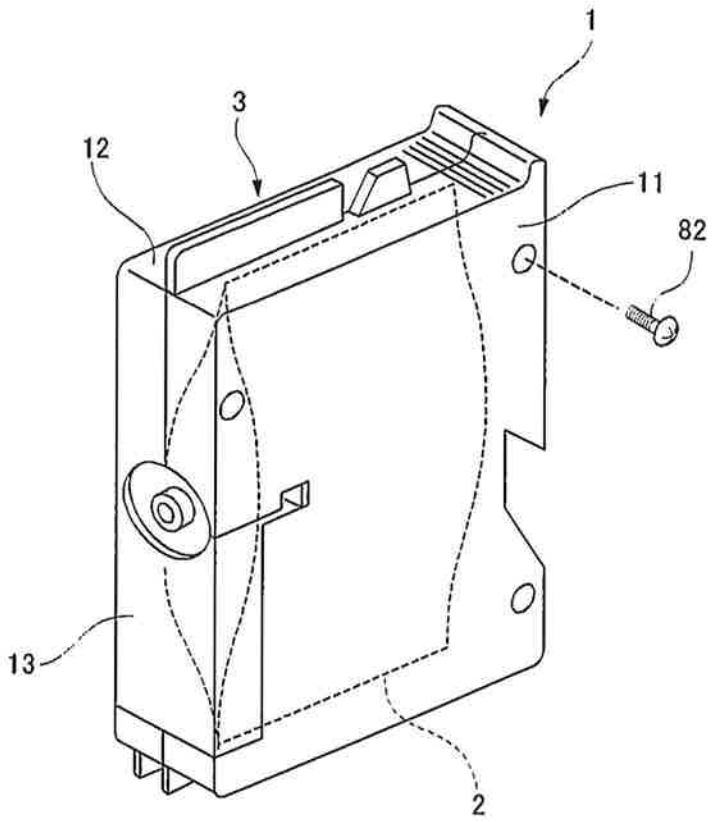

FIG. 2

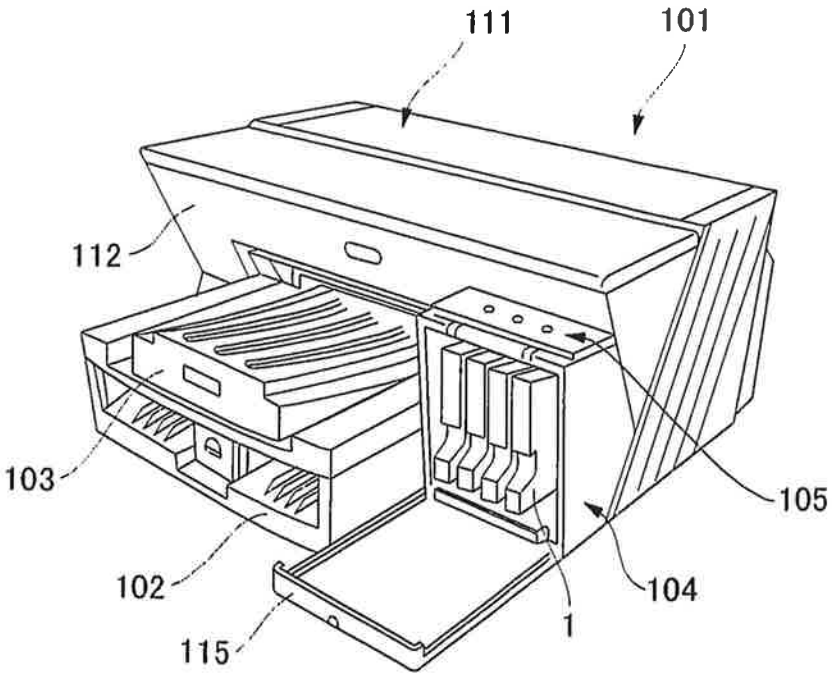

FIG. 3

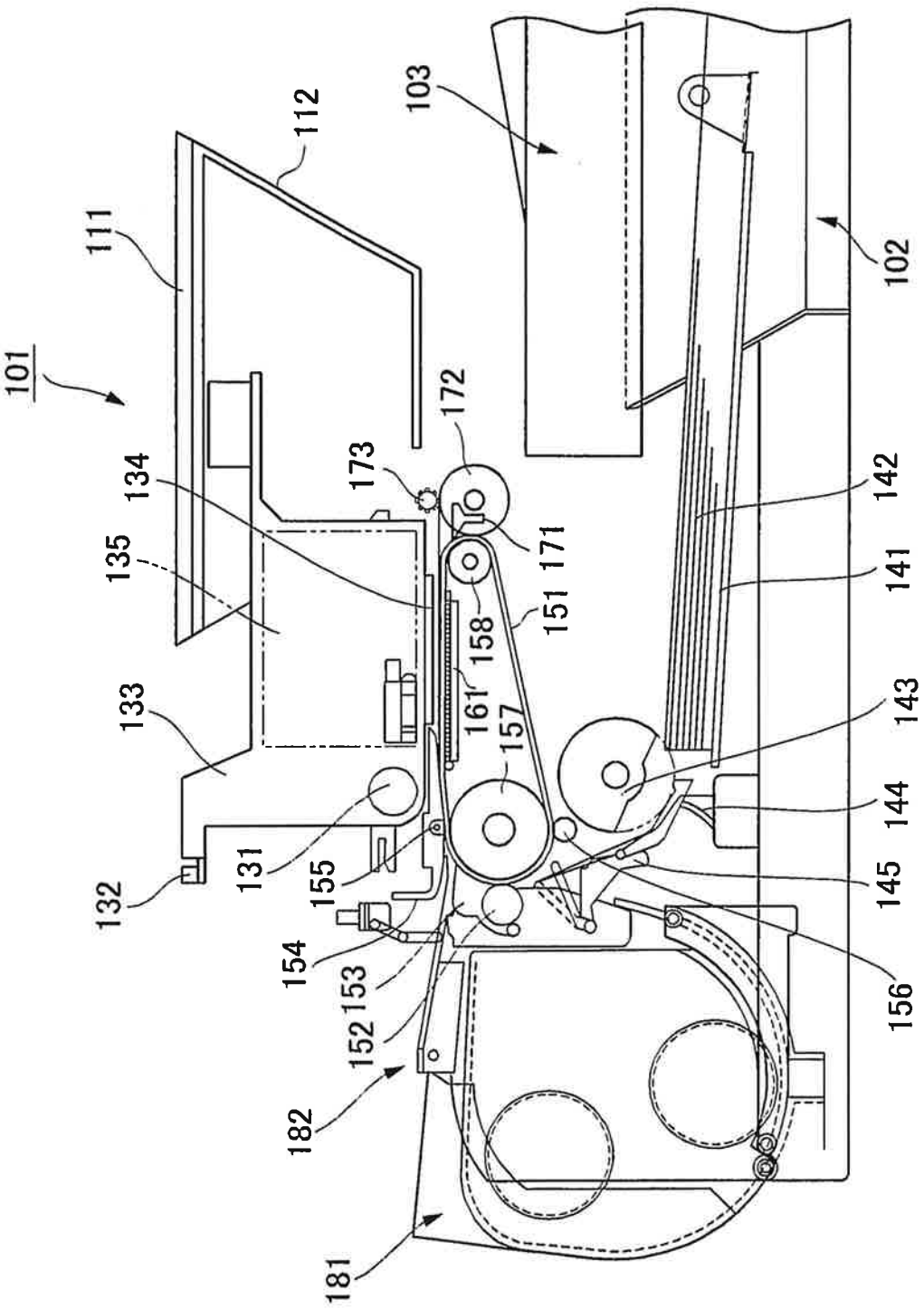
101
102
103
111
112
131
132
133
134
135
141
142
143
144
145
151
152
153
154
155
156
157
158
161
171
172
173
181
182

FIG. 4

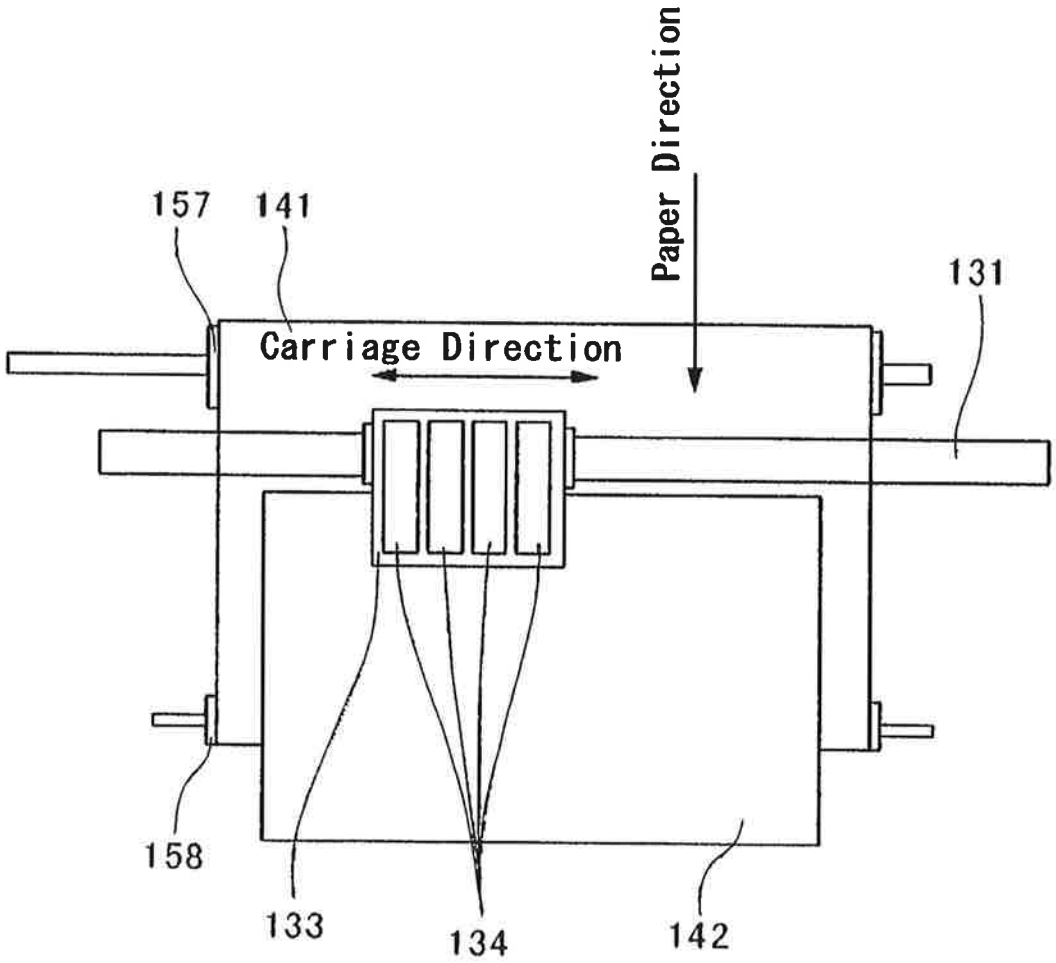
Paper Direction
157
141
131
Carriage Direction
158
133
134
142

FIG. 5

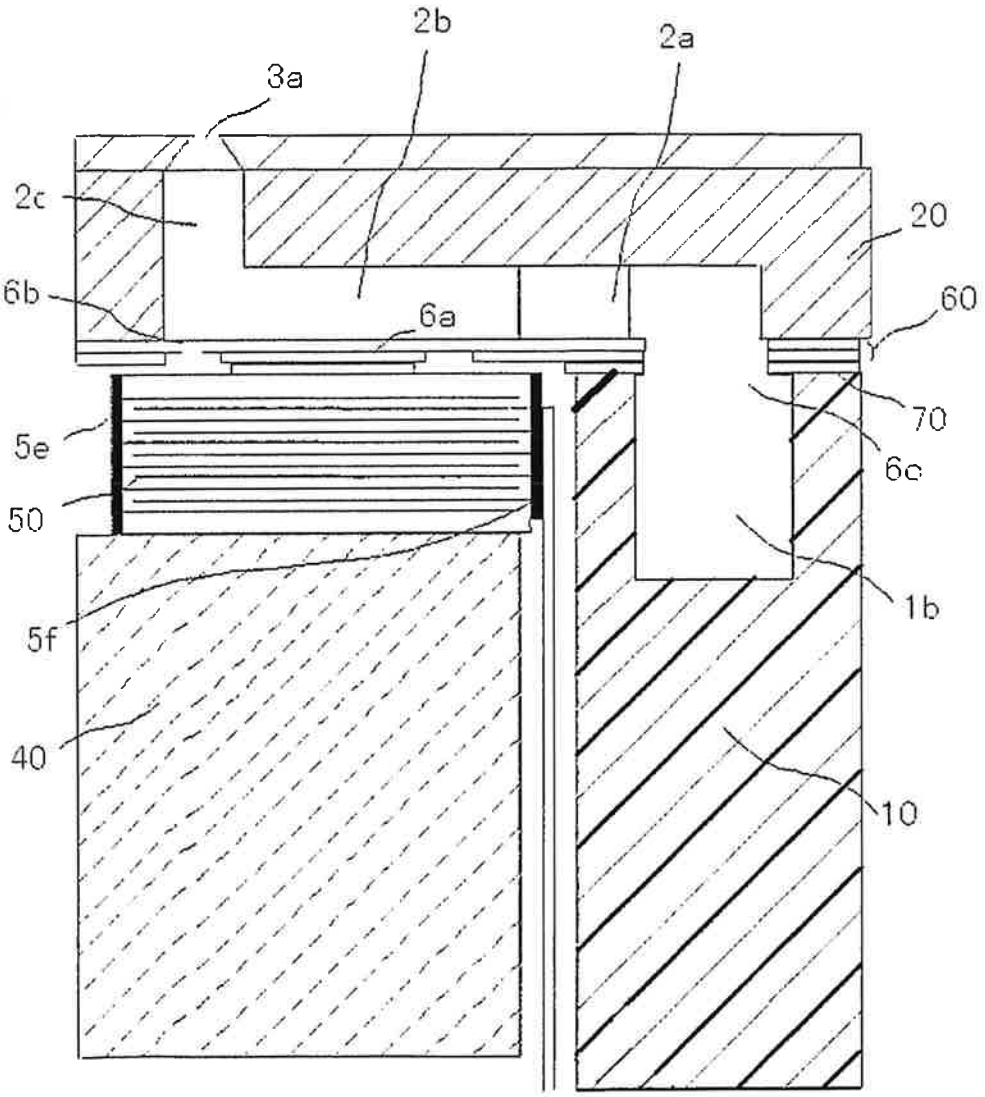

FIG. 6

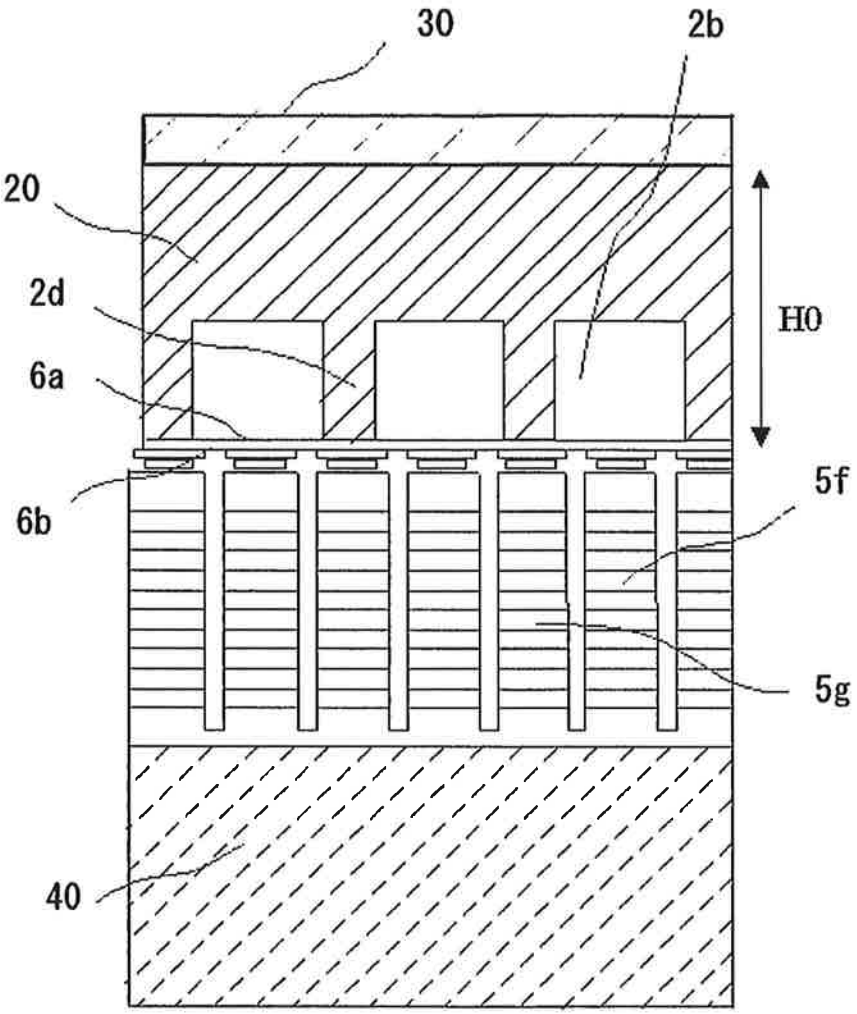

FIG. 7

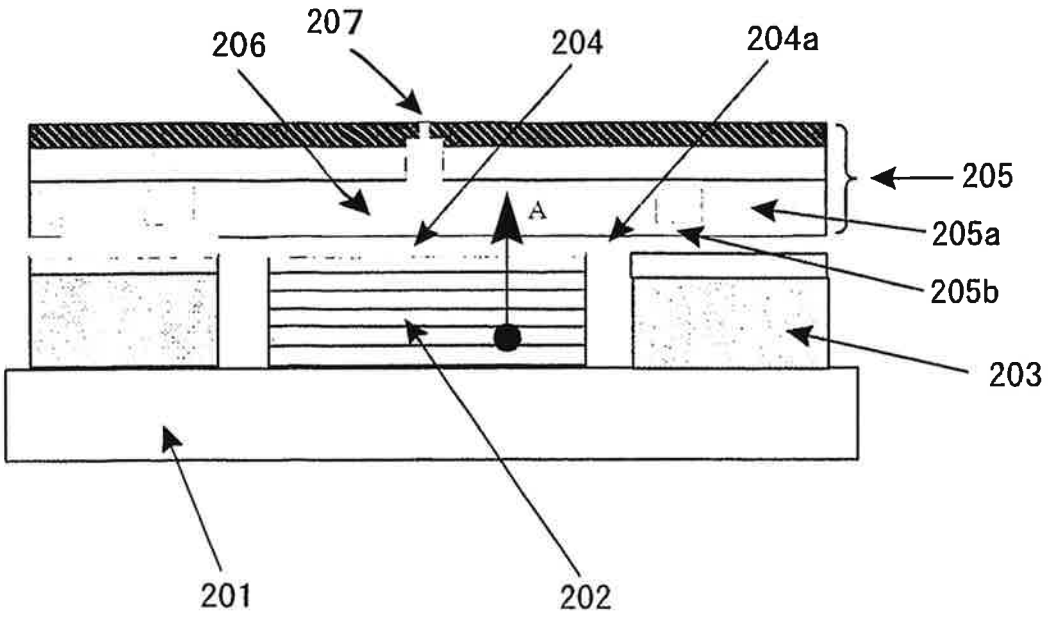
206
207
204
204a
205
A
205a
205b
203
201
202

FIG. 8

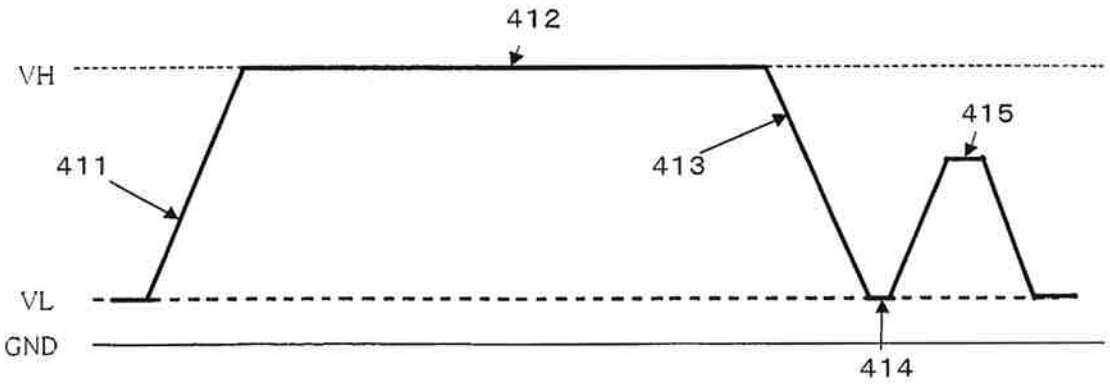
412
VH
411
413
415
VL
GND
414

FIG. 9

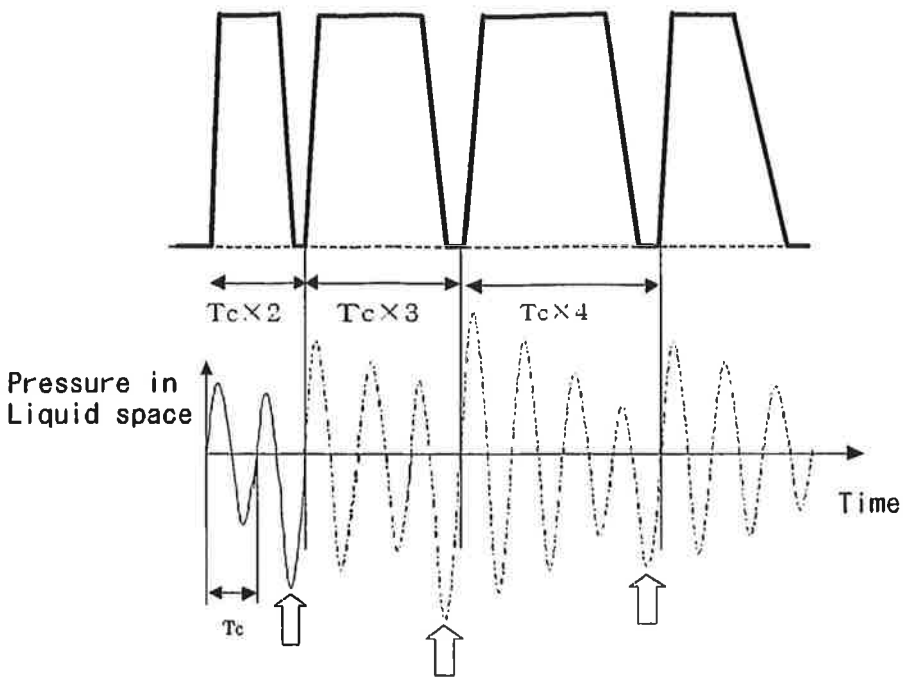
Tc×2
Tc×3
Tc×4
Pressure in
Liquid space
Time
Tc

FIG. 10

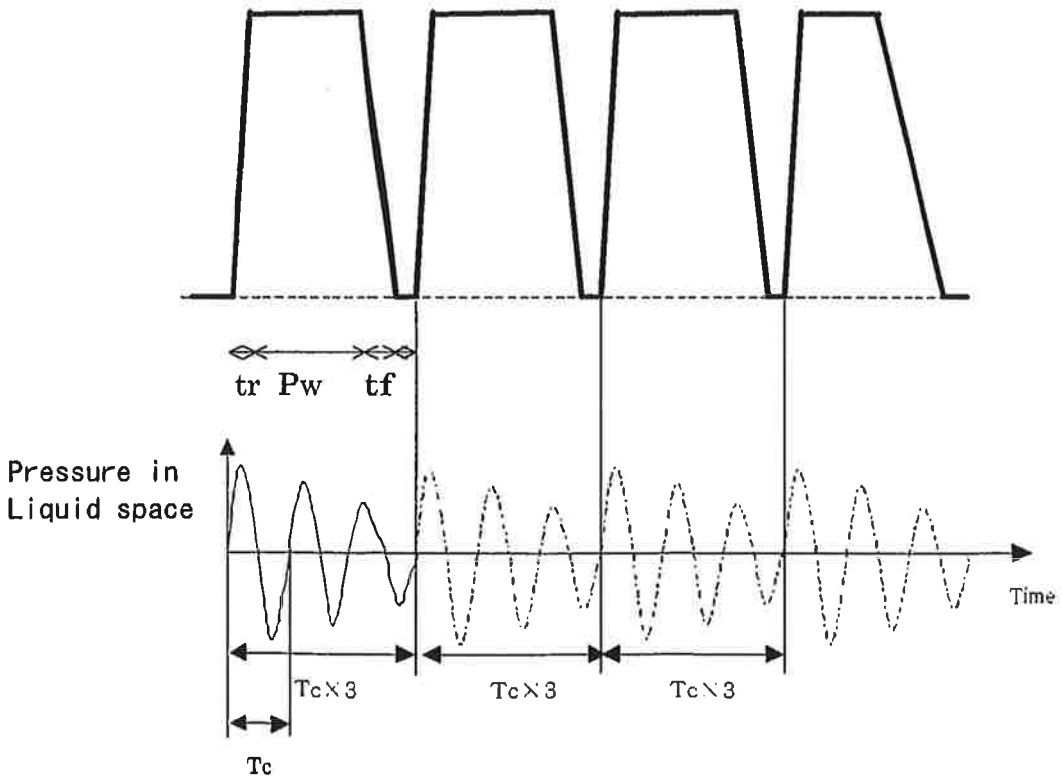
tr Pw tf
Pressure in
Liquid space
Time
Tc×3
Tc×3
Tc×3
Tc

FIG. 11

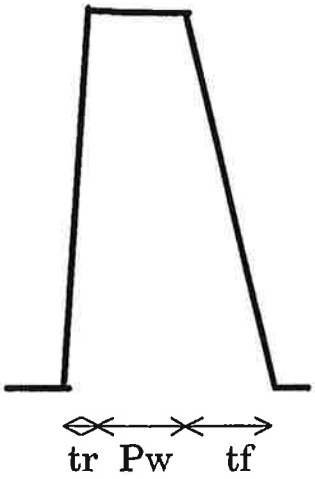
tr
Pw
tf

FIG. 12

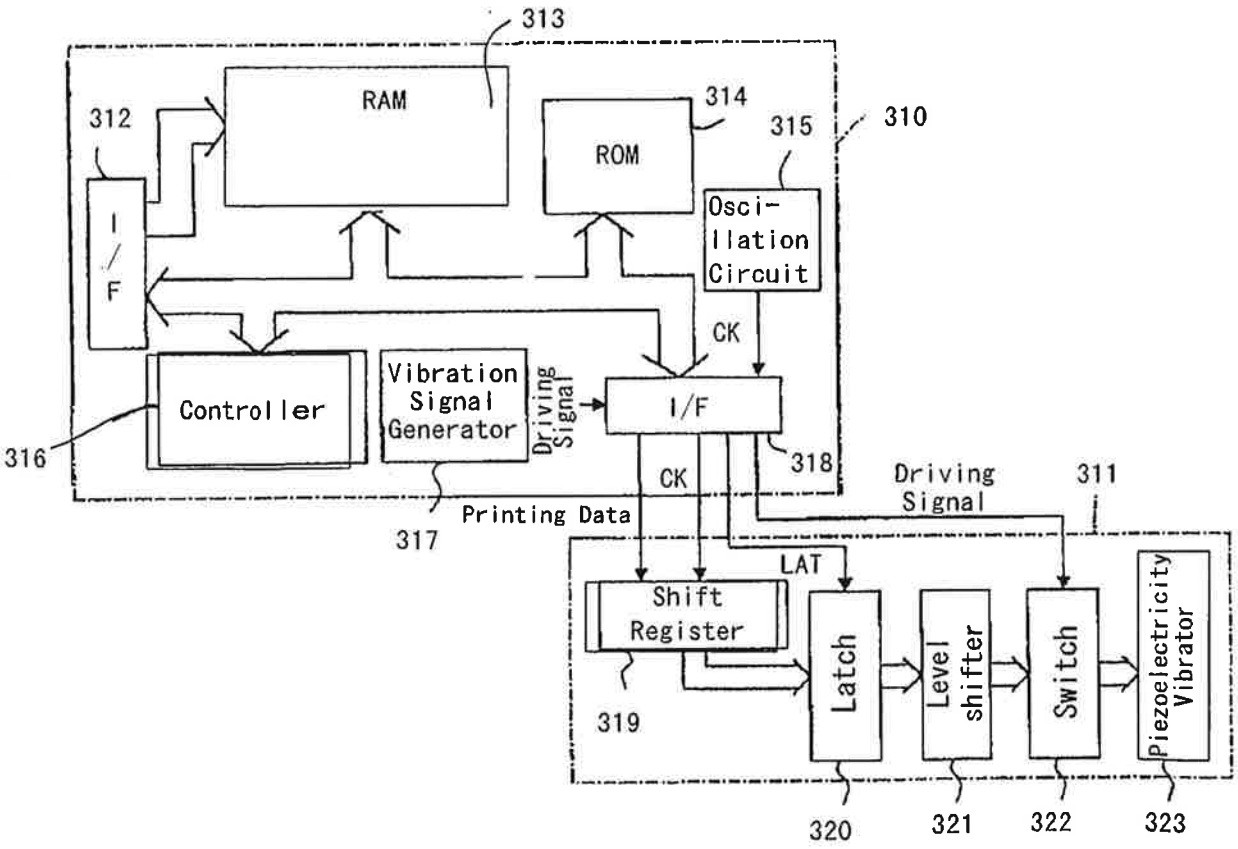
313
RAM
312
314
ROM
315
310
I/F
Osci-
llation
Circuit
CK
Controller
Vibration
Signal
Generator
Driving
Signal
I/F
316
318
CK
Driving
Signal
311
Printing Data
317
LAT
Shift
Register
Latch
Level
shifter
Switch
Piezoelectricity
Vibrator
319
320
321
322
323

FIG. 13 A

FIG. 13 B

FIG. 13 C

FIG. 13 D

FIG. 13 E

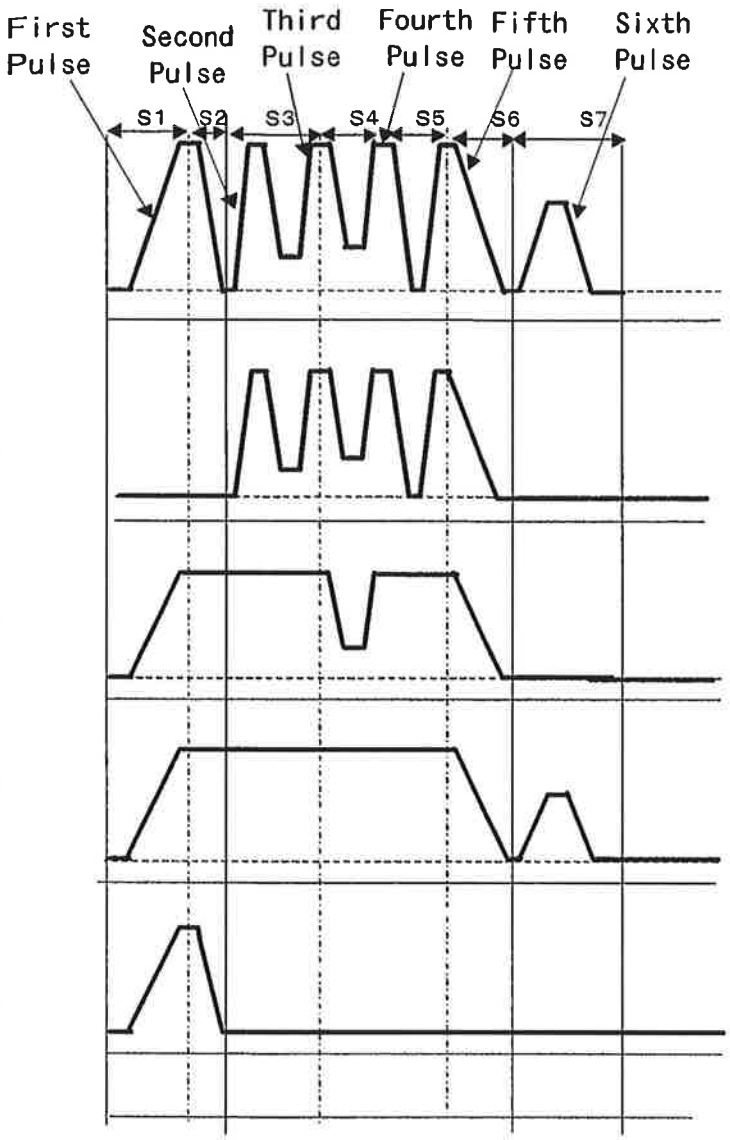

FIG. 14

	S1	S2	S3	S4	S5	S6	S7
Mj 1	0	0	1	1	1	1	0
Mj 2	1	0	0	1	0	1	0
Mj 3	1	0	0	0	0	1	1
Slight driving (No printing)	1	0	0	0	0	0	0

FIG. 16

	S1	S2	S3	S4	S5	S6	S7	S8
Mj 1	0	0	1	1	1	1	0	1
Mj 2	1	0	0	1	0	1	0	1
Mj 3	1	0	0	0	0	1	1	1
Slight driving (No printing)	0	0	0	0	0	0	0	1

FIG. 15 A

FIG. 15 B

FIG. 15 C

FIG. 15 D

FIG. 15 E

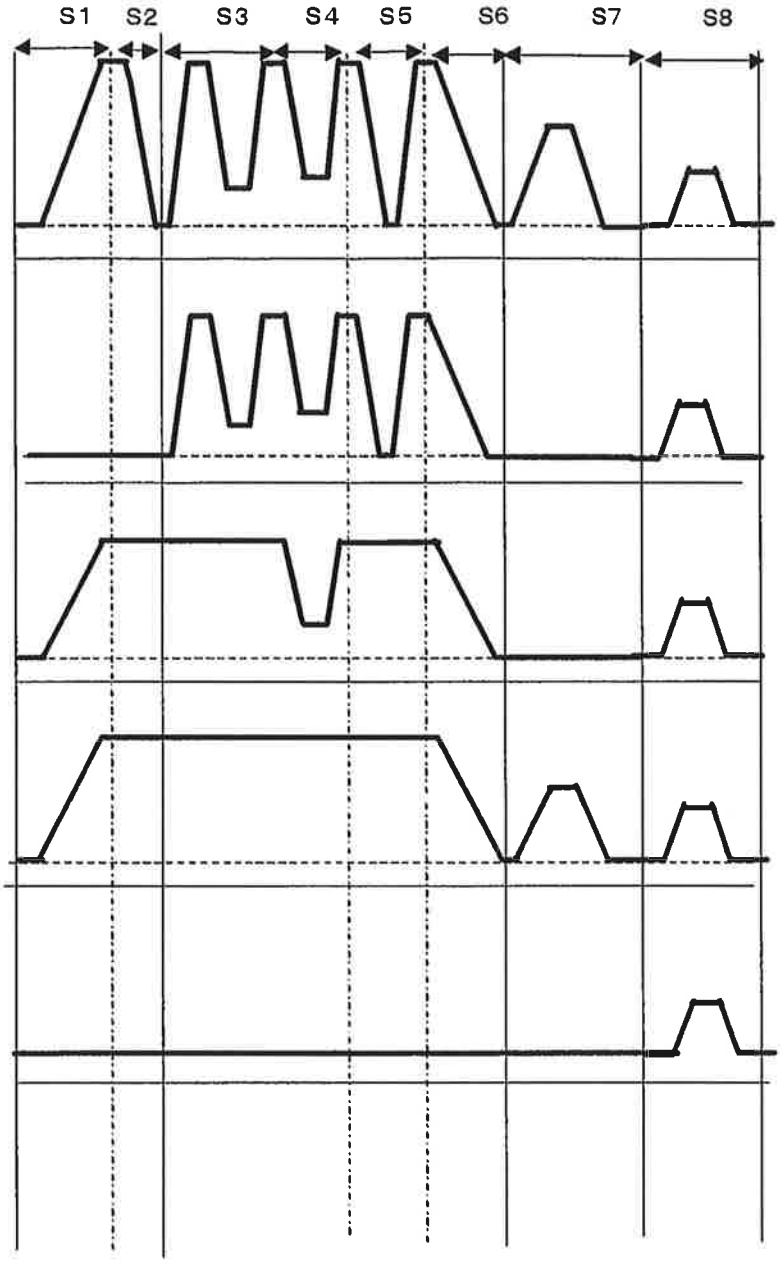

FIG. 17 A

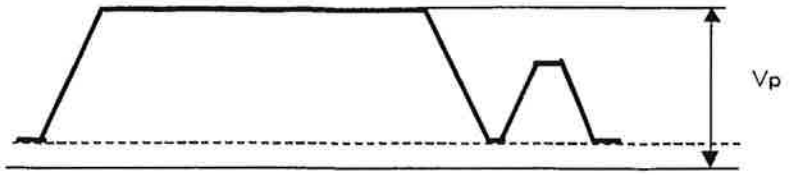

FIG. 17 B

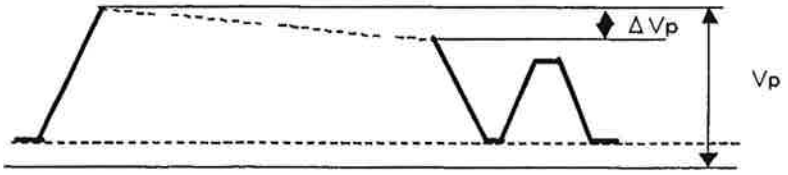

FIG. 17 C

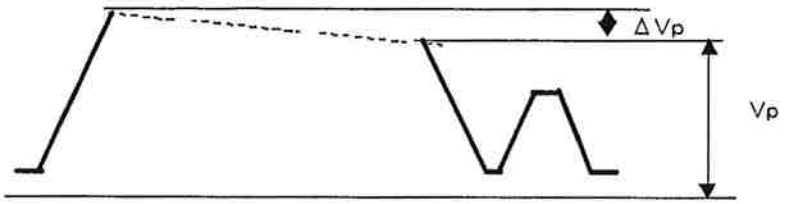

FIG. 18

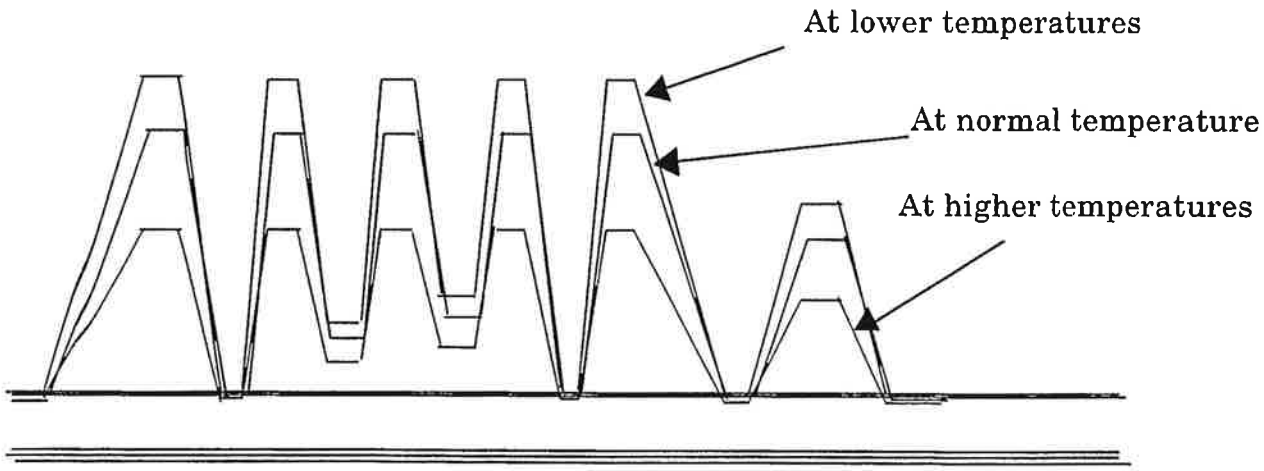

FIG. 19

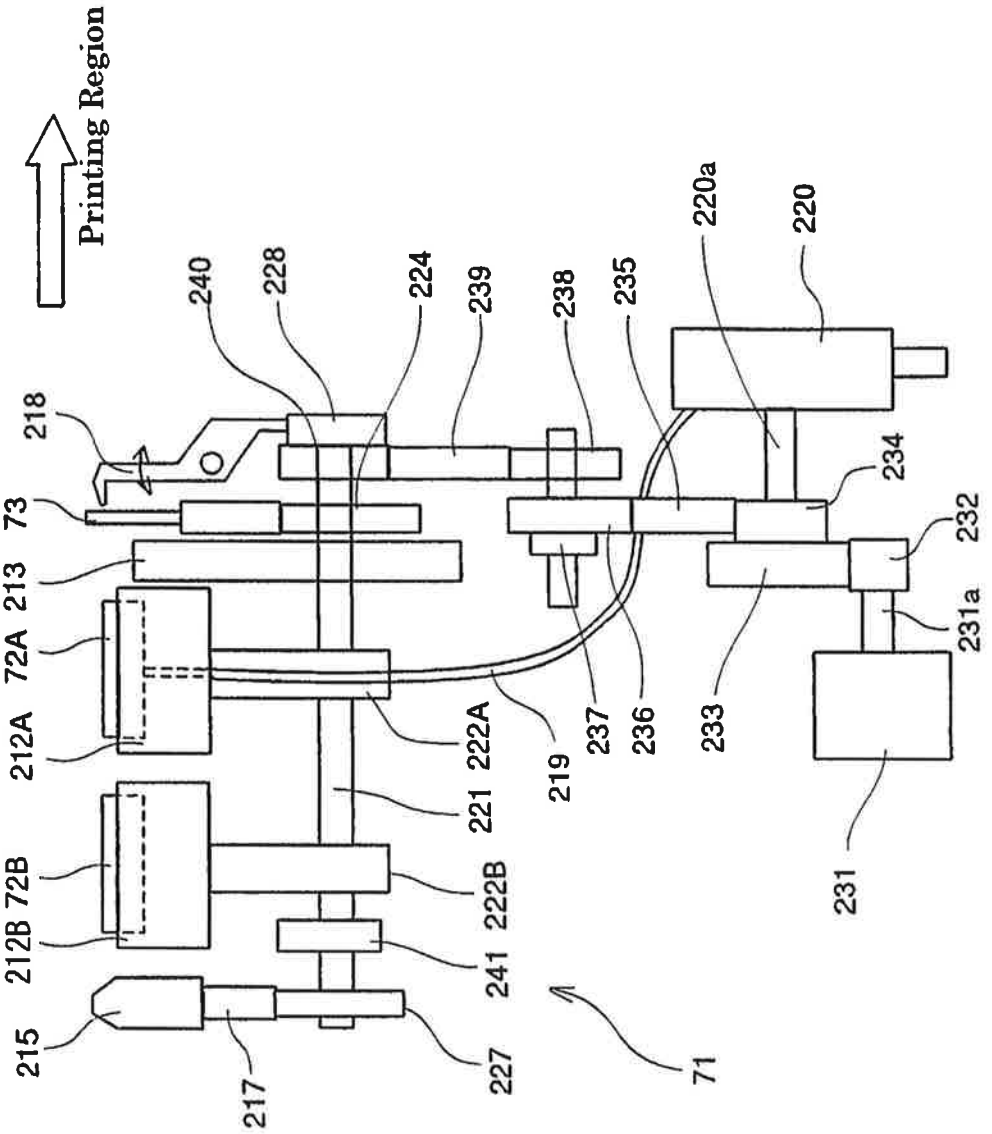
Printing Region
240
228
224
239
238
235
220a
220
218
73
213
72A
212A
72B
212B
215
217
227
241
222B
221
222A
219
237
236
233
234
232
231a
231
71