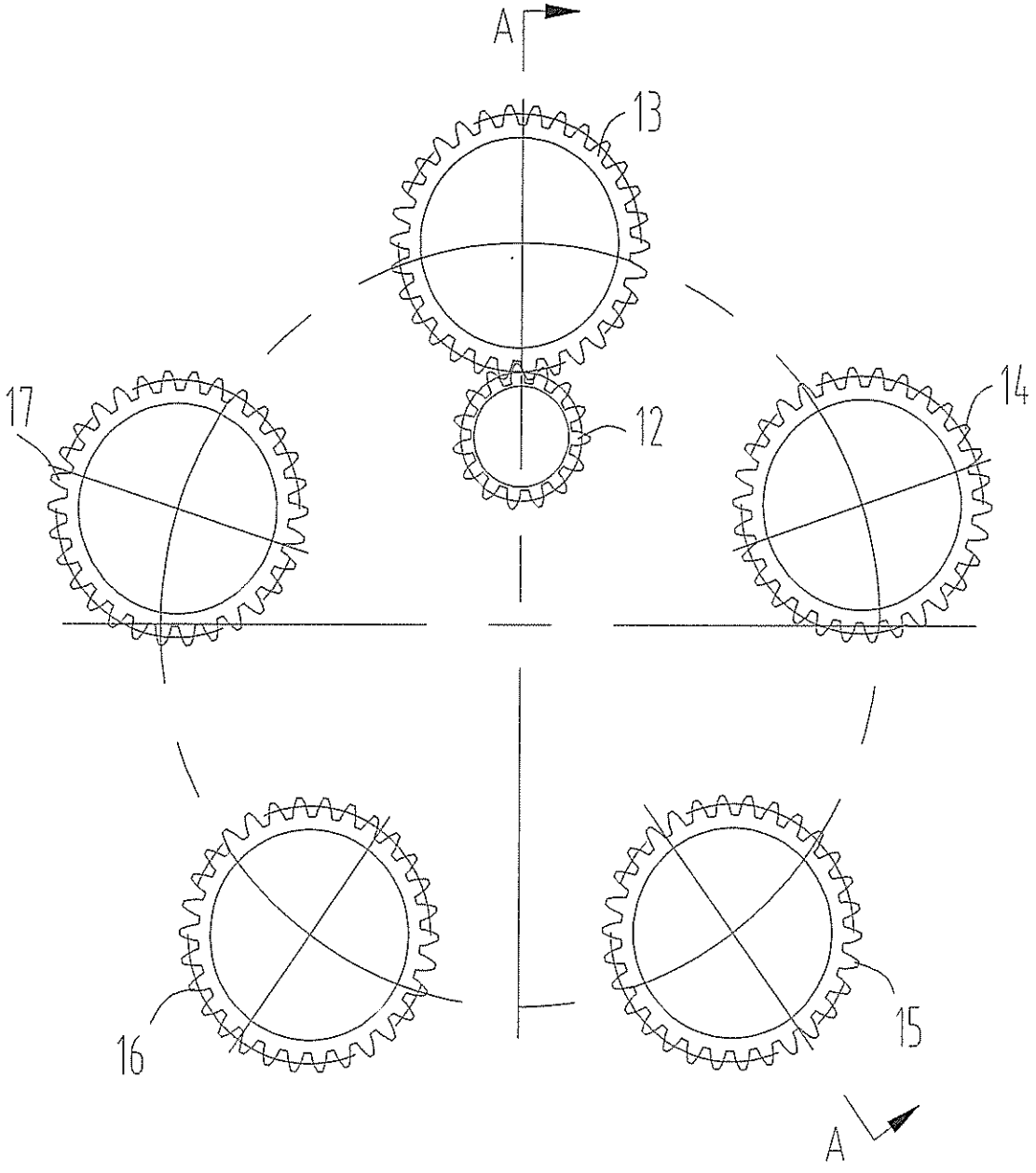

Fig. 1

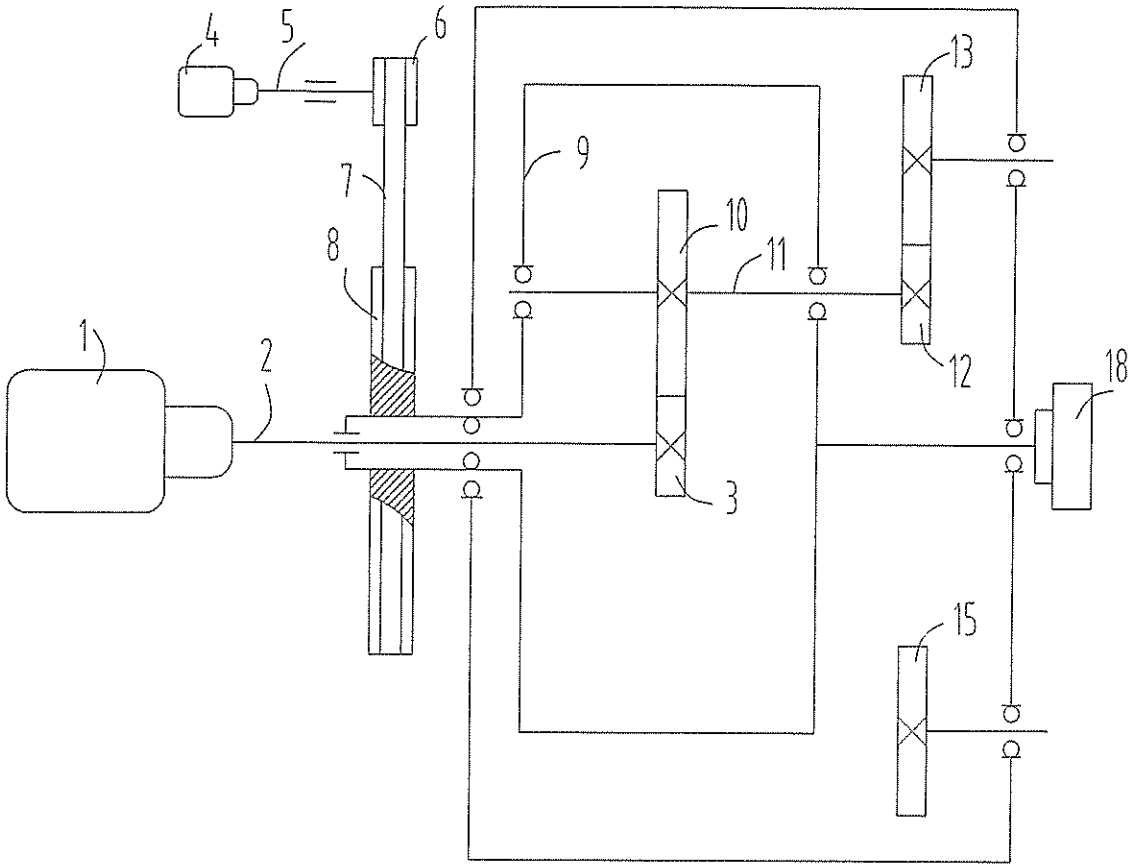

Fig. 2

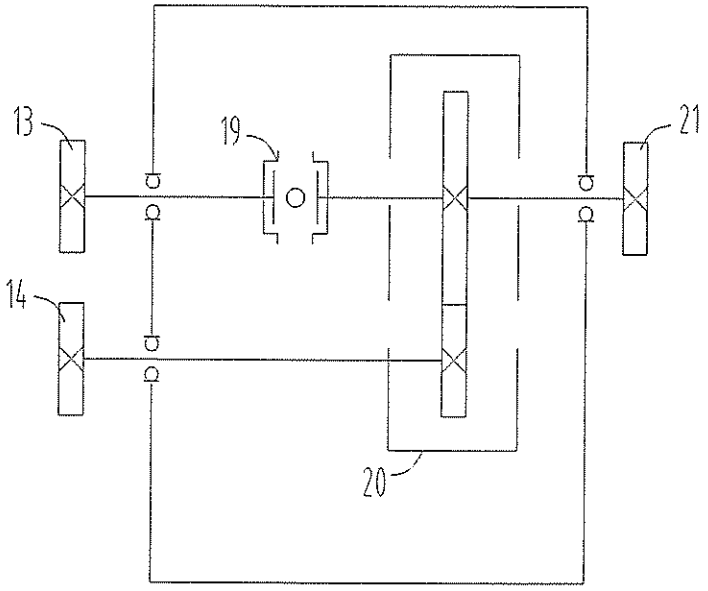

Fig. 3

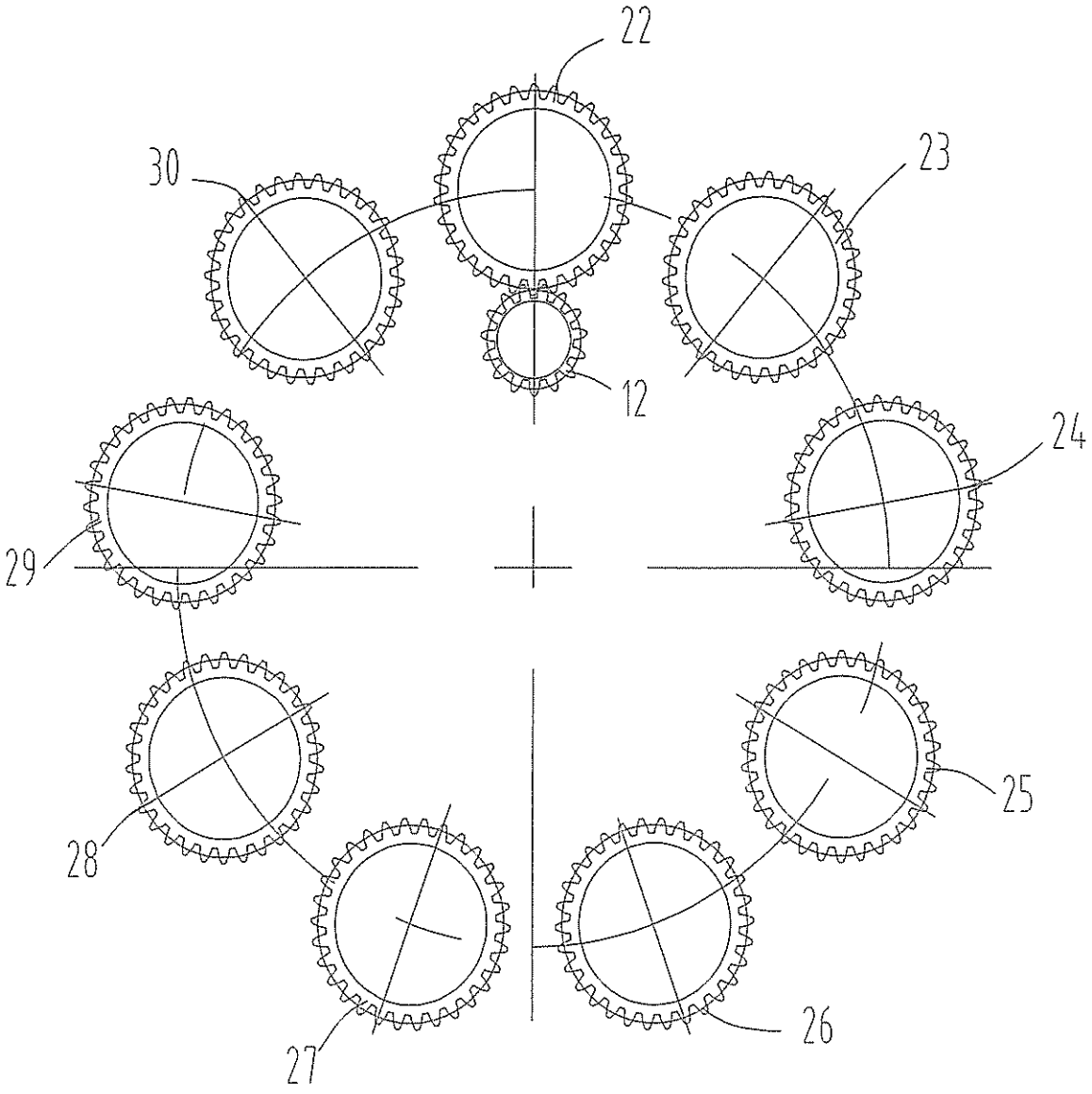

Fig. 4

APPENDED DRAWINGS OF ABSTRACT

