(12) INTERNATIONAL APPLICATION PUBLISHED UNDER THE PATENT COOPERATION TREATY (PCT)

(19) World Intellectual Property Organization
International Bureau

(43) International Publication Date
2 April 2009 (02.04.2009)

PCT

(10) International Publication Number
WO 2009/042948 A1

(51) International Patent Classification:
G10L 11/02 (2006.01)

(21) International Application Number:
PCT/US2008/077994

(22) International Filing Date:
26 September 2008 (26.09.2008)

(25) Filing Language: English

(26) Publication Language: English

(30) Priority Data:
11/864,897 28 September 2007 (28.09.2007) US

(71) Applicant *(for all designated States except US)*: **QUALCOMM Incorporated** [US/US]; Attn: International IP Administration, 5775 Morehouse Drive, San Diego, California 92121 (US).

(72) Inventors; and

(75) Inventors/Applicants *(for US only)*: **WANG, Song** [CN/US]; 5775 Morehouse Drive, San Diego, California 92121 (US). **GUPTA, Samir Kumar** [US/US]; 5775 Morehouse Drive, San Diego, California 92121 (US). **CHOY, Eddie, L. T.** [US/US]; 5775 Morehouse Drive, San Diego, California 92121 (US).

(74) Agent: **DIAZ HIDALGO, Espartaco**; Attn: International IP Administration, 5775 Morehouse Drive, San Diego, Califonia 92121 (US).

(81) Designated States *(unless otherwise indicated, for every kind of national protection available)*: AE, AG, AL, AM, AO, AT, AU, AZ, BA, BB, BG, BH, BR, BW, BY, BZ, CA, CH, CN, CO, CR, CU, CZ, DE, DK, DM, DO, DZ, EC, EE, EG, ES, FI, GB, GD, GE, GH, GM, GT, HN, HR, HU, ID, IL, IN, IS, JP, KE, KG, KM, KN, KP, KR, KZ, LA, LC, LK, LR, LS, LT, LU, LY, MA, MD, ME, MG, MK, MN, MW, MX, MY, MZ, NA, NG, NI, NO, NZ, OM, PG, PH, PL, PT, RO, RS, RU, SC, SD, SE, SG, SK, SL, SM, ST, SV, SY, TJ, TM, TN, TR, TT, TZ, UA, UG, US, UZ, VC, VN, ZA, ZM, ZW.

(84) Designated States *(unless otherwise indicated, for every kind of regional protection available)*: ARIPO (BW, GH, GM, KE, LS, MW, MZ, NA, SD, SL, SZ, TZ, UG, ZM, ZW), Eurasian (AM, AZ, BY, KG, KZ, MD, RU, TJ, TM), European (AT, BE, BG, CH, CY, CZ, DE, DK, EE, ES, FI, FR, GB, GR, HR, HU, IE, IS, IT, LT, LU, LV, MC, MT, NL, NO, PL, PT, RO, SE, SI, SK, TR), OAPI (BF, BJ, CF, CG, CI, CM, GA, GN, GQ, GW, ML, MR, NE, SN, TD, TG).

[Continued on next page]

(54) Title: MULTIPLE MICROPHONE VOICE ACTIVITY DETECTOR

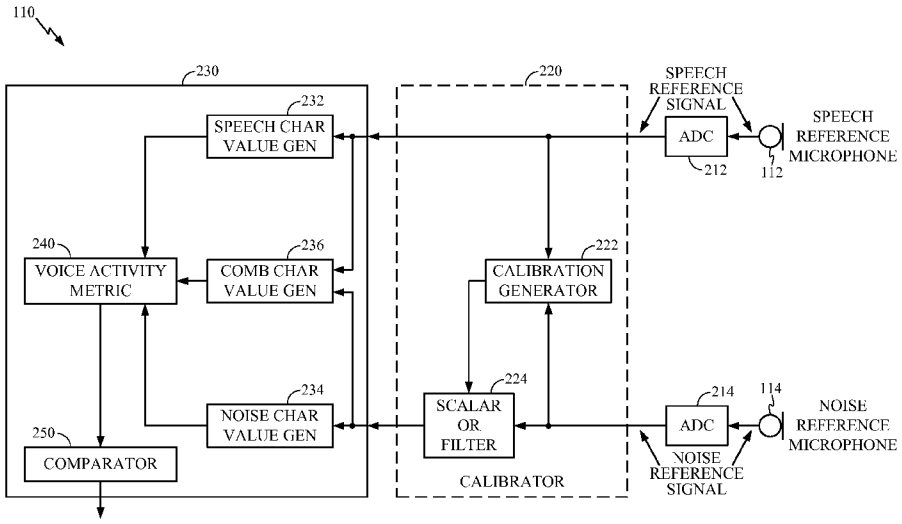

FIG. 2

(57) Abstract: Voice activity detection using multiple microphones can be based on a relationship between an energy at each of a speech reference microphone and a noise reference microphone. The energy output from each of the speech reference microphone and the noise reference microphone can be determined. A speech to noise energy ratio can be determined and compared to a predetermined voice activity threshold. In another embodiment, the absolute value of the autocorrelation of the speech and noise reference signals are determined and a ratio based on autocorrelation values is determined. Ratios that exceed the predetermined threshold can indicate the presence of a voice signal. The speech and noise energies or autocorrelations can be determined using a weighted average or over a discrete frame size.

WO 2009/042948 A1

Declarations under Rule 4.17:

— *as to applicant's entitlement to apply for and be granted a patent (Rule 4.17(ii))*

— *as to the applicant's entitlement to claim the priority of the earlier application (Rule 4.17(iii))*

Published:

— *with international search report*