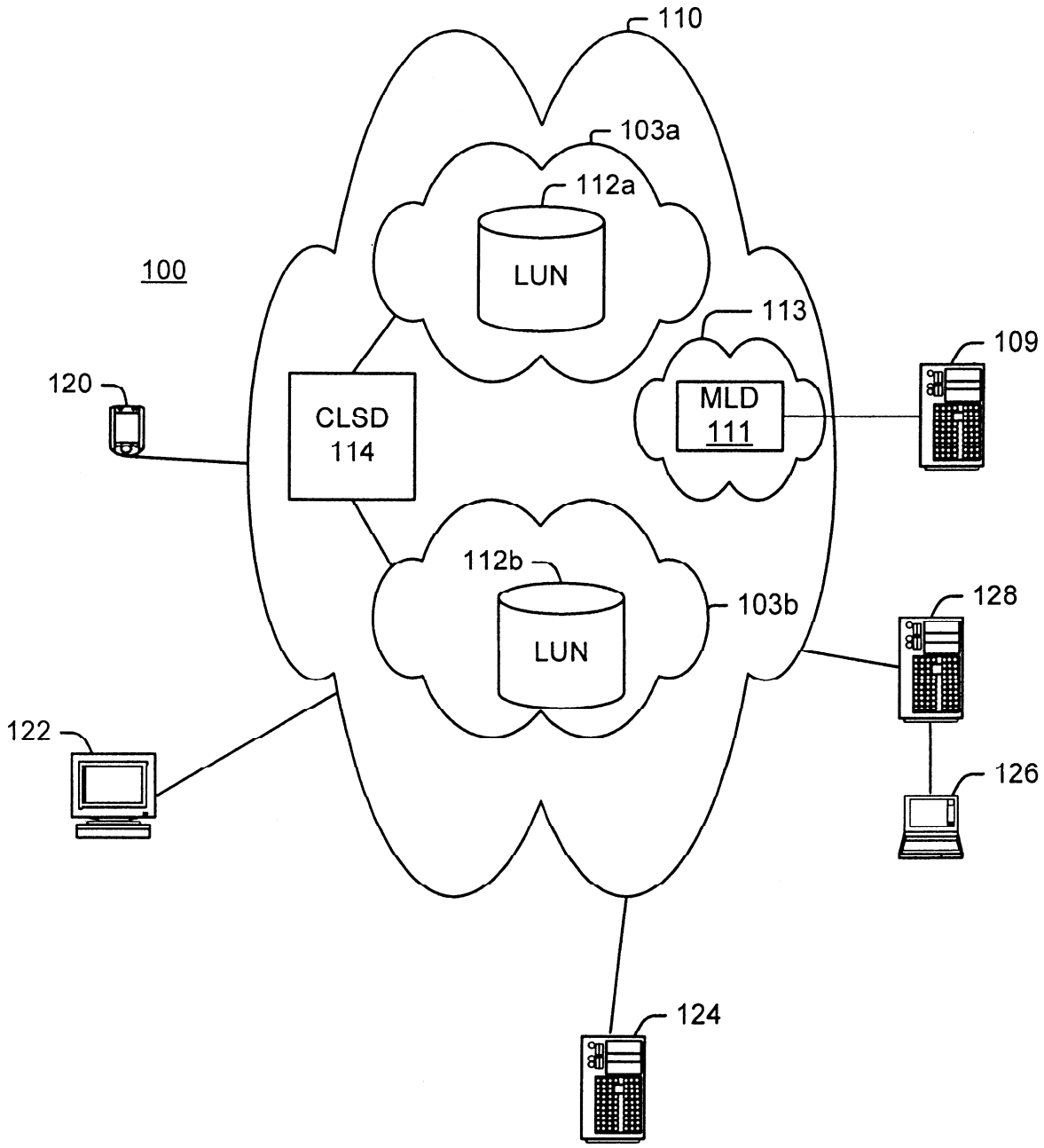
110
103a
112a
LUN
100
113
109
120
CLSD
114
MLD
111
112b
103b
128
LUN
122
126
124

Fig. 1

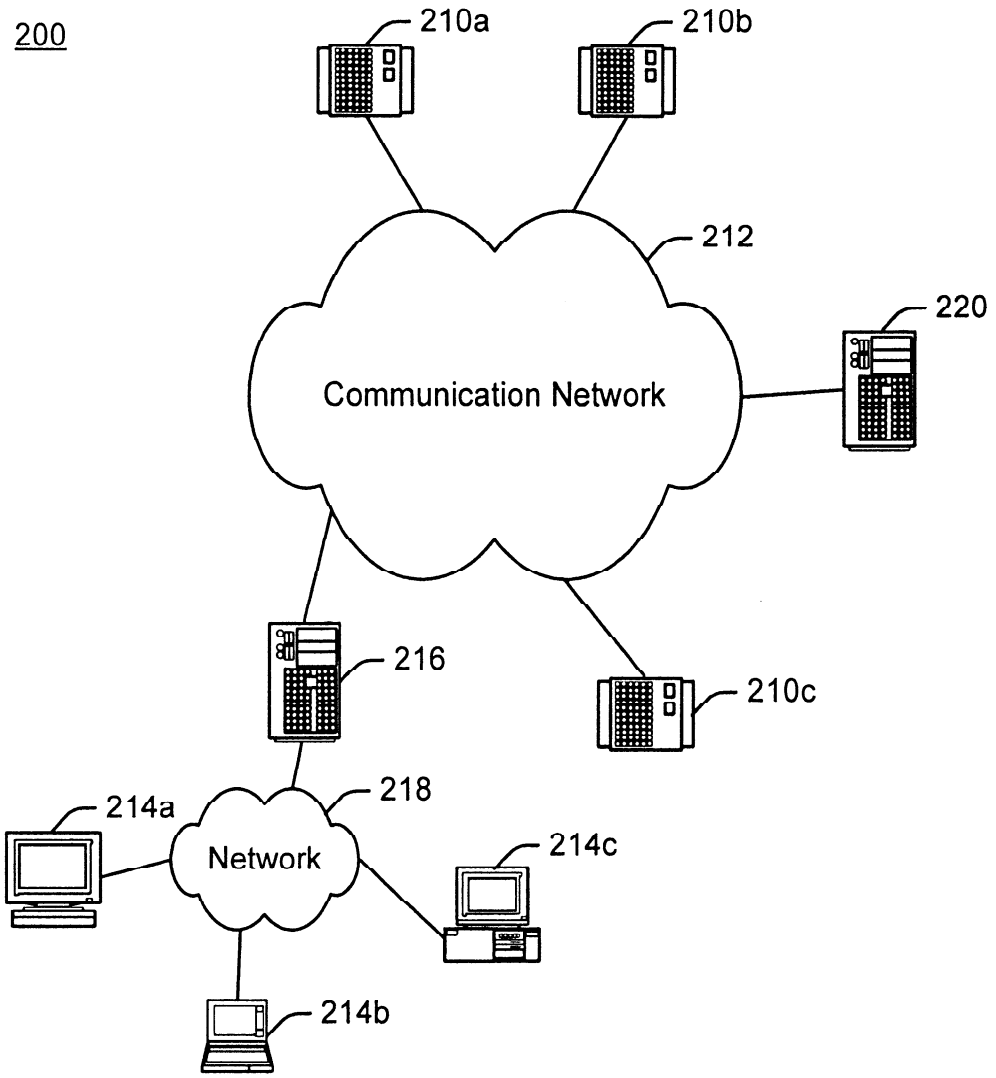
200
210a
210b
212
220
Communication Network
216
210c
214a
218
Network
214c
214b

Fig. 2

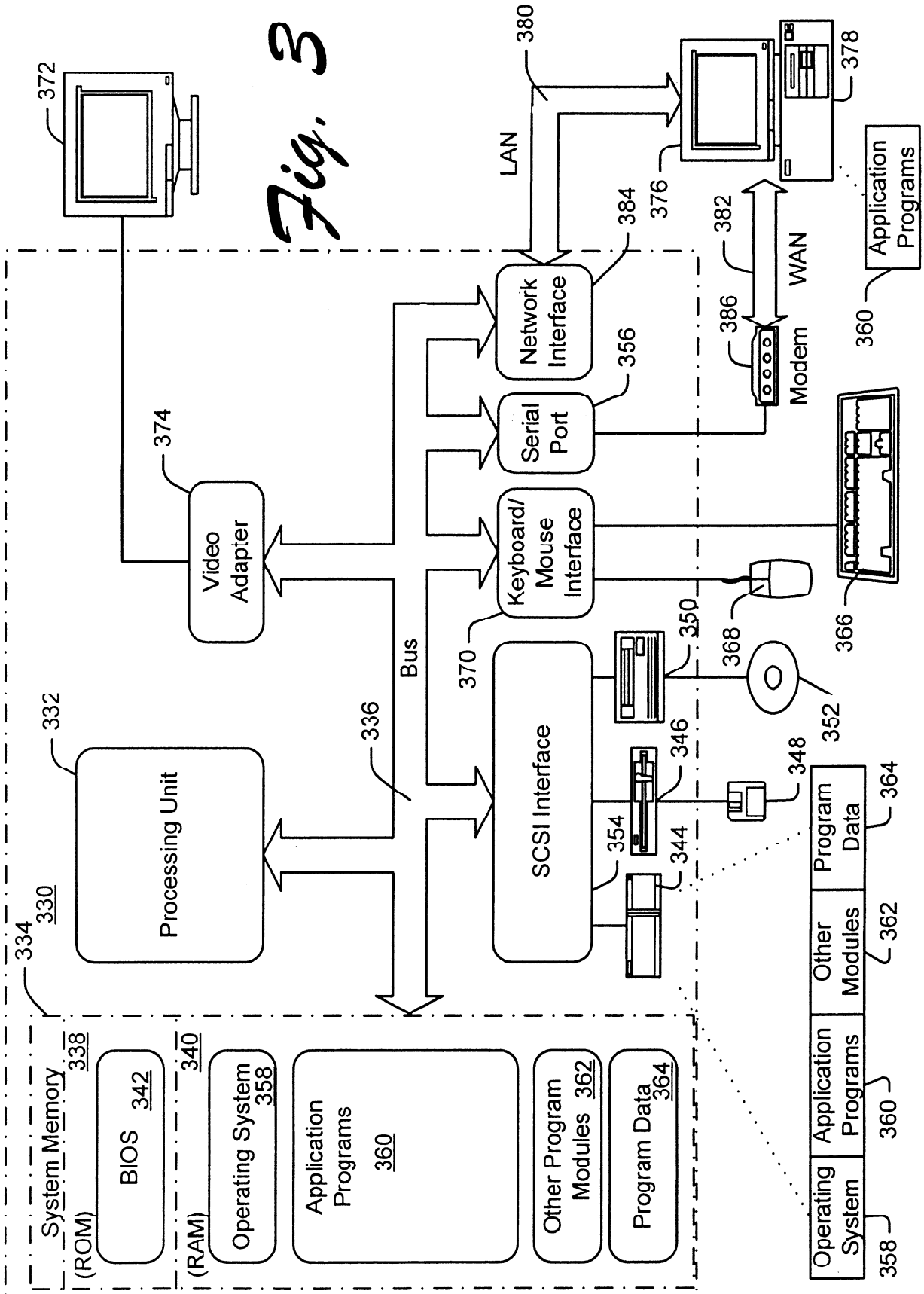

System Memory
(ROM)
338
BIOS 342
(RAM)
340
Operating System 358
Application Programs 360
Other Program Modules 362
Program Data 364
334
330
Processing Unit
332
336
Bus
Video Adapter
374
372
Network Interface
384
Serial Port
356
Keyboard/ Mouse Interface
370
SCSI Interface
354
344
346
348
350
352
368
366
Modem
386
382
WAN
LAN
380
376
378
Application Programs
360
Operating System
358
Application Programs
360
Other Modules
362
Program Data
364

Fig. 3

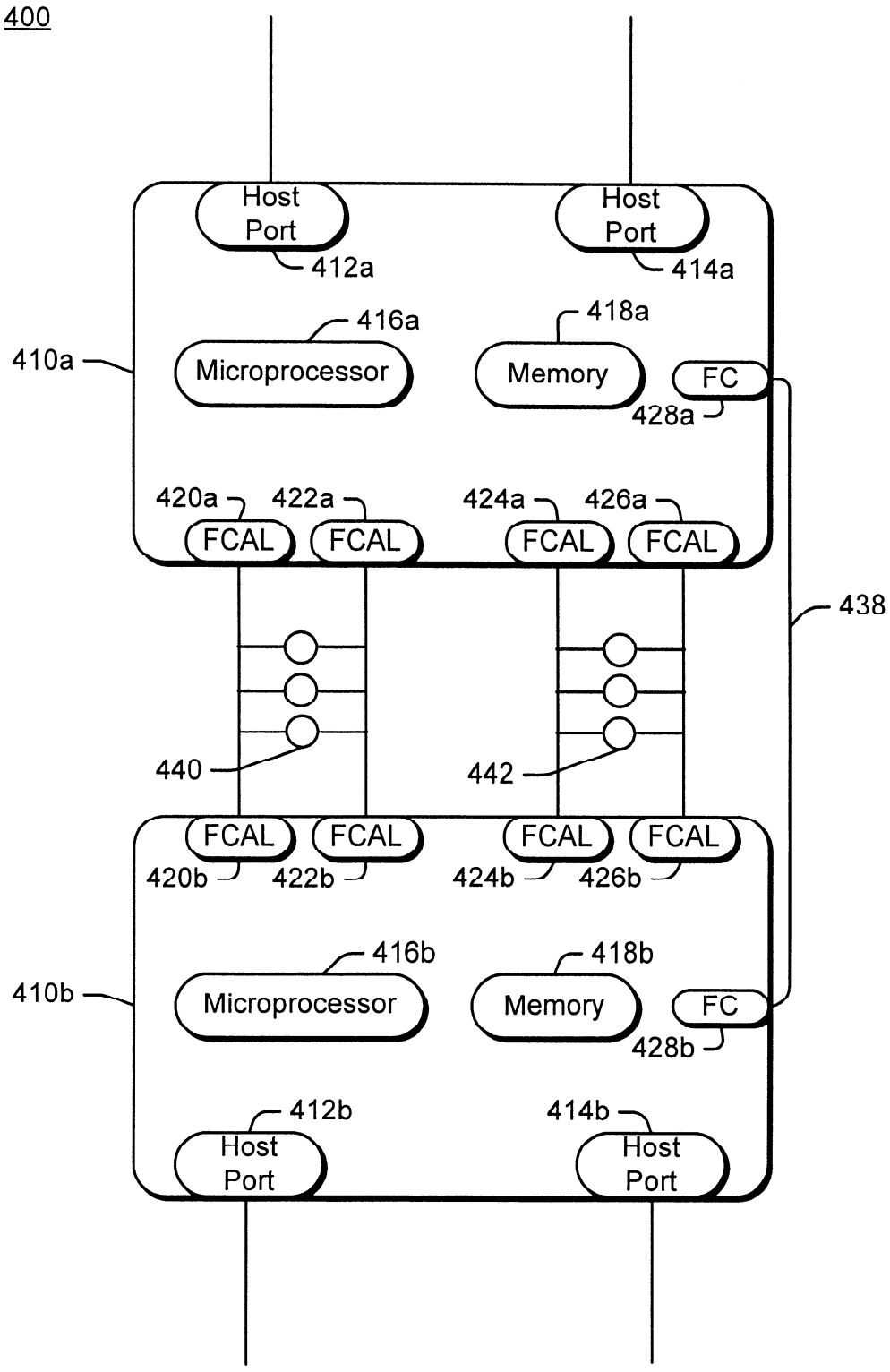
400
Host Port
412a
Host Port
414a
416a
418a
410a
Microprocessor
Memory
FC
428a
420a
422a
424a
426a
FCAL
FCAL
FCAL
FCAL
438
440
442
FCAL
FCAL
FCAL
FCAL
420b
422b
424b
426b
416b
418b
410b
Microprocessor
Memory
FC
428b
412b
414b
Host Port
Host Port

Fig. 4

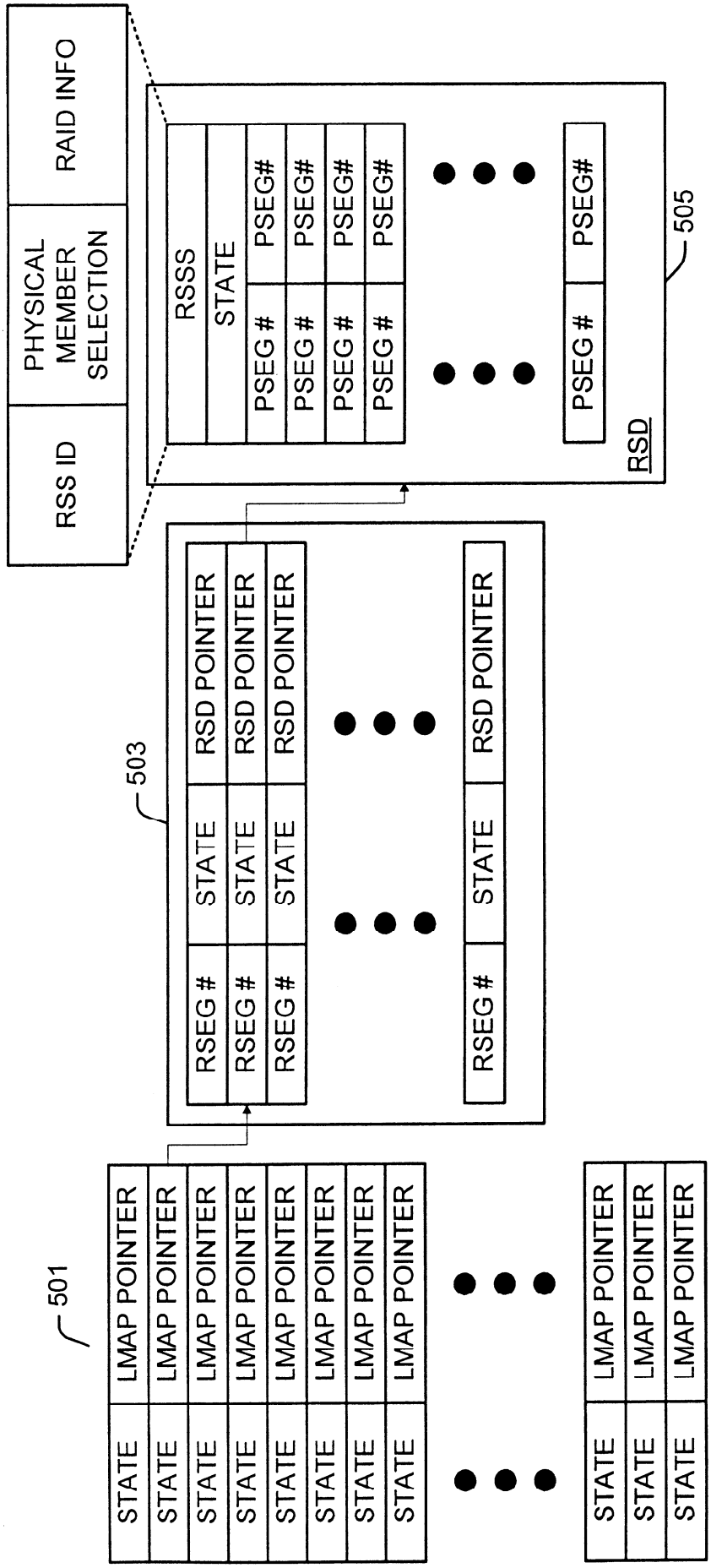
501
LMAP POINTER
STATE
503
RSEG #
STATE
RSD POINTER
RSD
RSSS
STATE
PSEG #
PSEG#
505
RSS ID
PHYSICAL MEMBER SELECTION
RAID INFO

Fig. 5

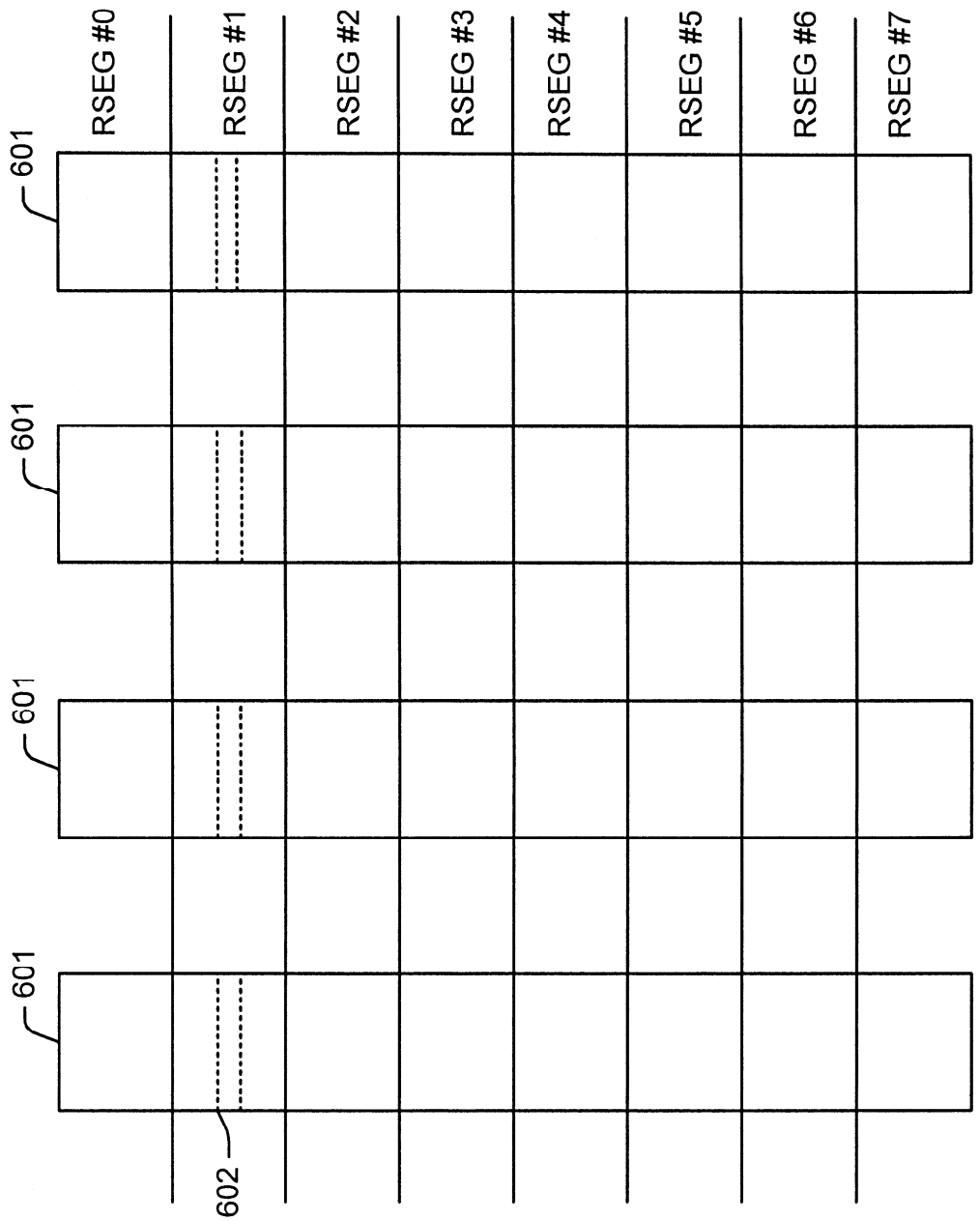
RSEG #0
RSEG #1
RSEG #2
RSEG #3
RSEG #4
RSEG #5
RSEG #6
RSEG #7
601
601
601
601
602

Fig. 6

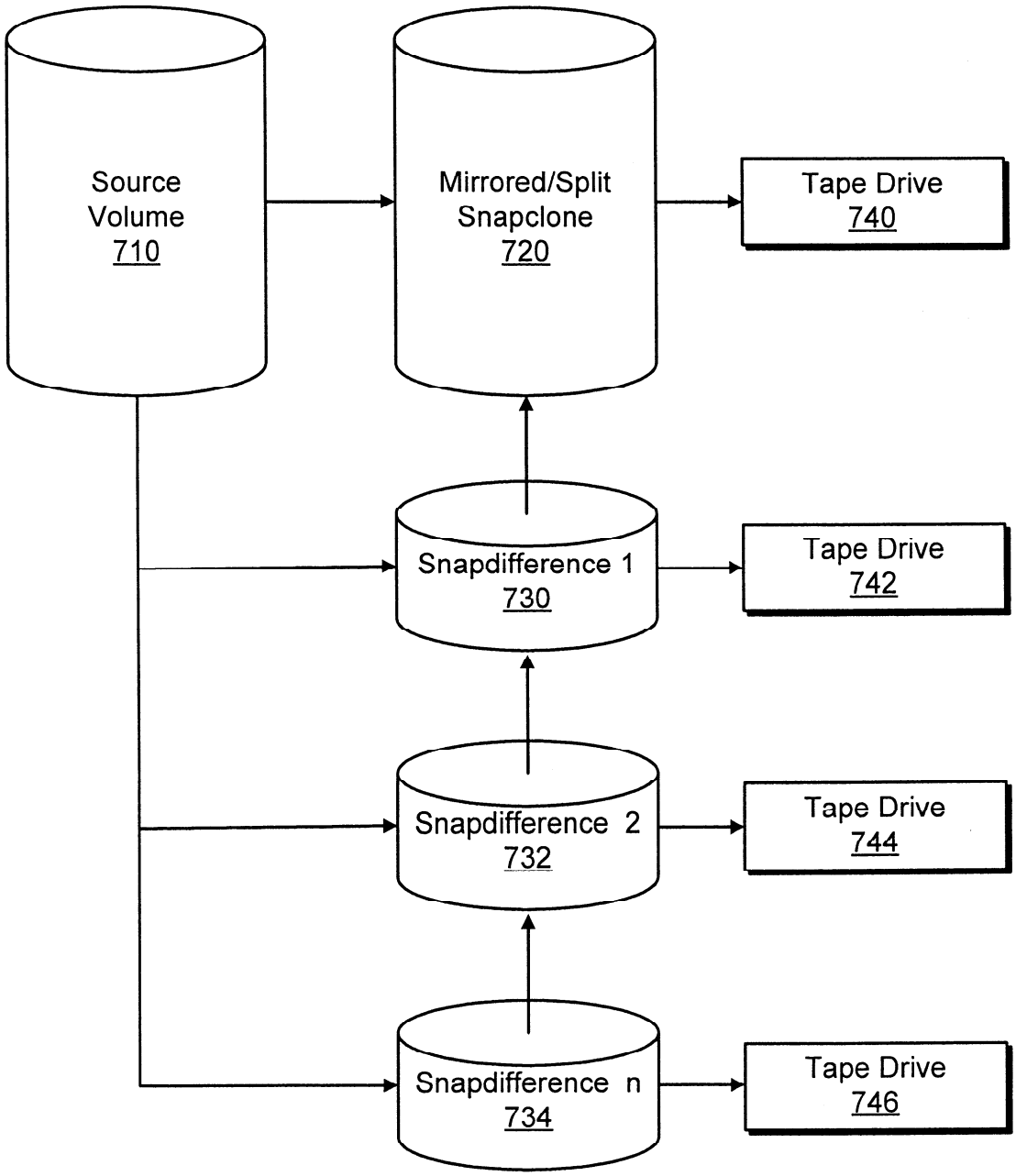
Source
Volume
710
Mirrored/Split
Snapclone
720
Tape Drive
740
Snapdifference 1
730
Tape Drive
742
Snapdifference 2
732
Tape Drive
744
Snapdifference n
734
Tape Drive
746

Fig. 7

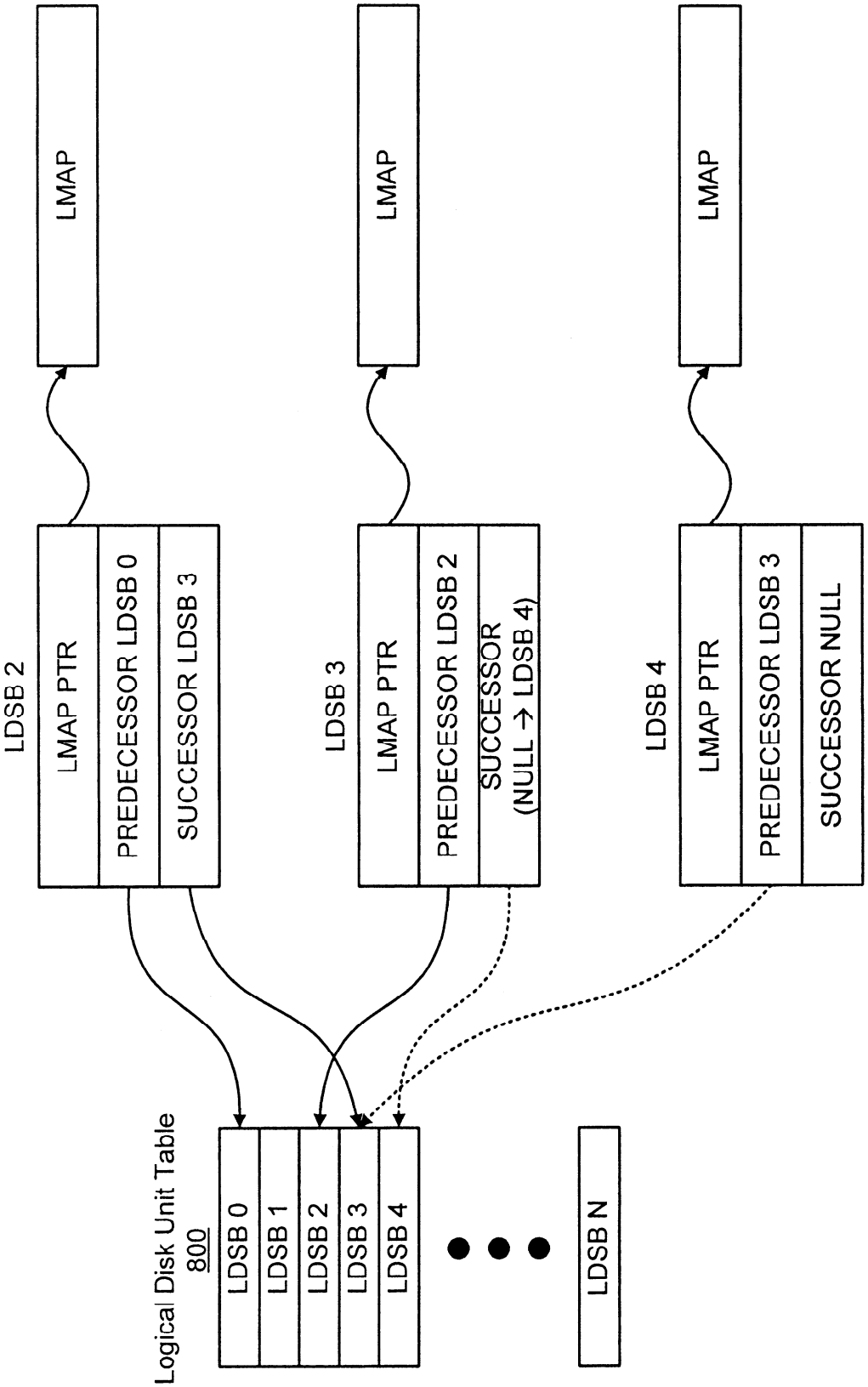
LMAP
LMAP
LMAP
LDSB 2
LMAP PTR
PREDECESSOR LDSB 0
SUCCESSOR LDSB 3
LDSB 3
LMAP PTR
PREDECESSOR LDSB 2
SUCCESSOR
(NULL → LDSB 4)
LDSB 4
LMAP PTR
PREDECESSOR LDSB 3
SUCCESSOR NULL
Logical Disk Unit Table
800
LDSB 0
LDSB 1
LDSB 2
LDSB 3
LDSB 4
LDSB N

Fig. 8

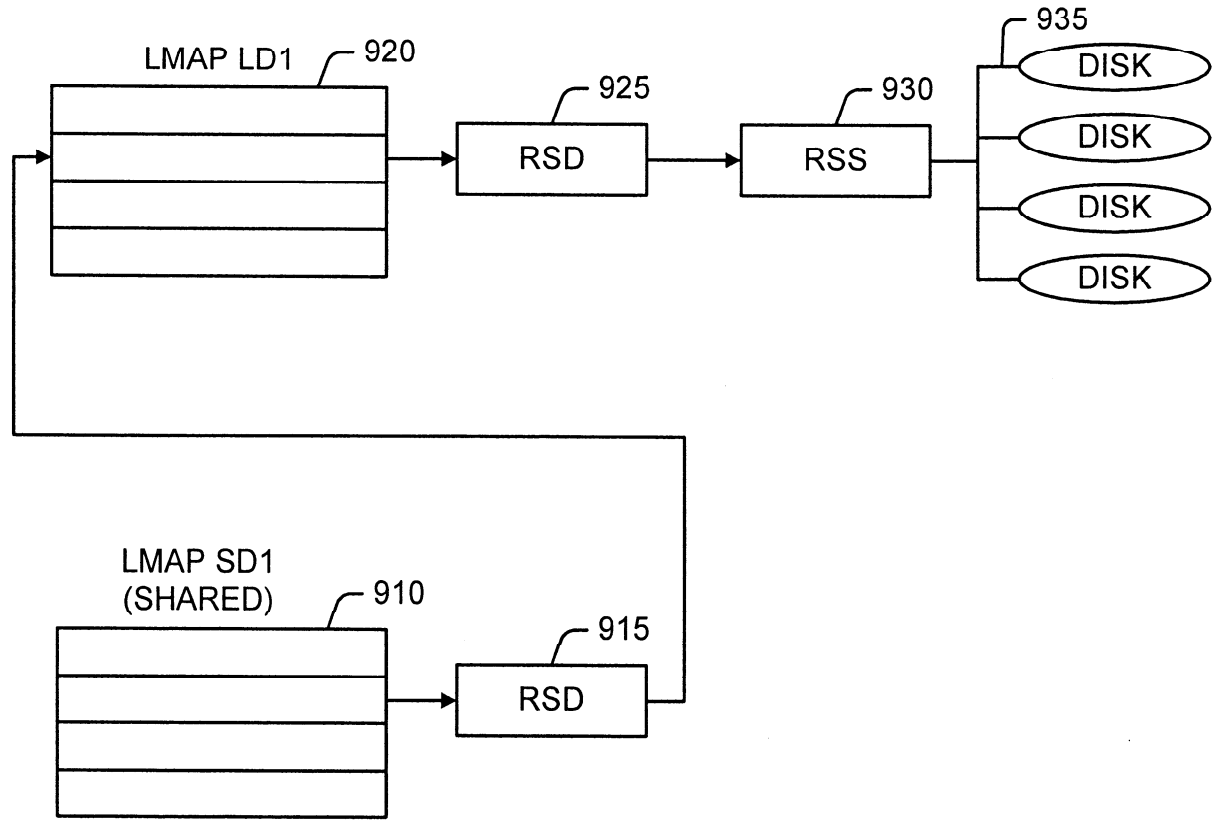
LMAP LD1
920
925
RSD
930
RSS
935
DISK
DISK
DISK
DISK
LMAP SD1
(SHARED)
910
915
RSD

Fig. 9a

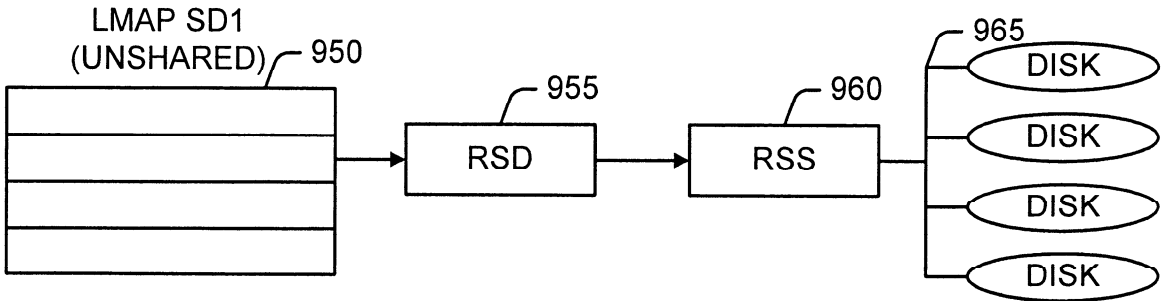
LMAP SD1
(UNSHARED)
950
955
RSD
960
RSS
965
DISK
DISK
DISK
DISK

Fig. 9b

1000

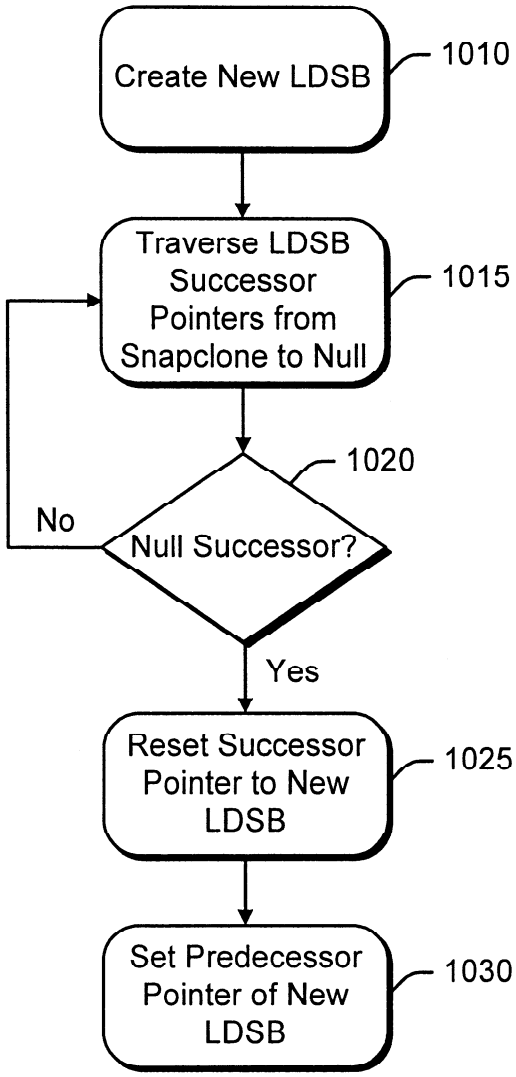
Create New LDSB
1010
Traverse LDSB Successor Pointers from Snapclone to Null
1015
1020
Null Successor?
No
Yes
Reset Successor Pointer to New LDSB
1025
Set Predecessor Pointer of New LDSB
1030

Fig. 10

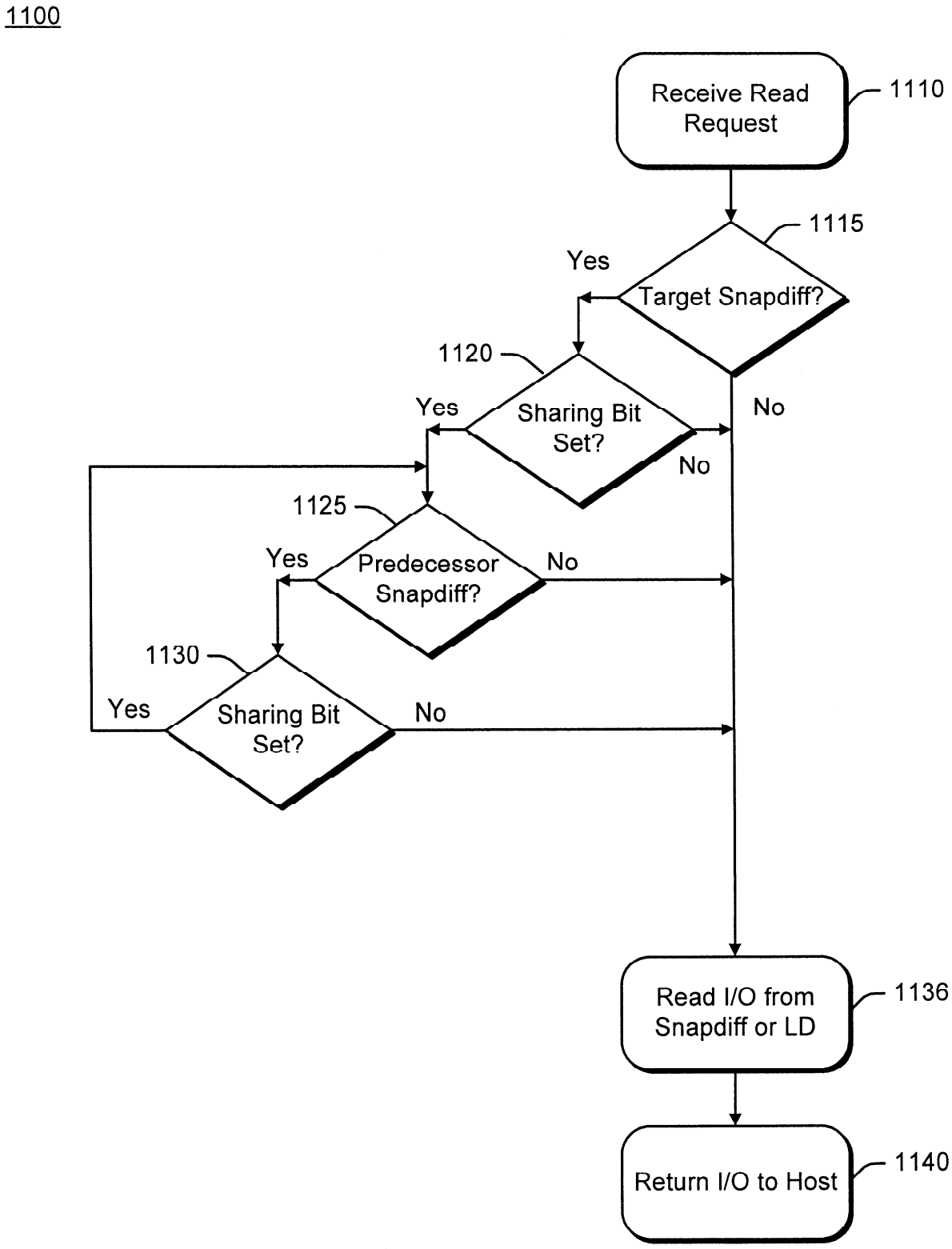
1100
Receive Read Request
1110
1115
Target Snapdiff?
Yes
No
1120
Sharing Bit Set?
Yes
No
1125
Predecessor Snapdiff?
Yes
No
1130
Sharing Bit Set?
Yes
No
Read I/O from Snapdiff or LD
1136
Return I/O to Host
1140

Fig. 11

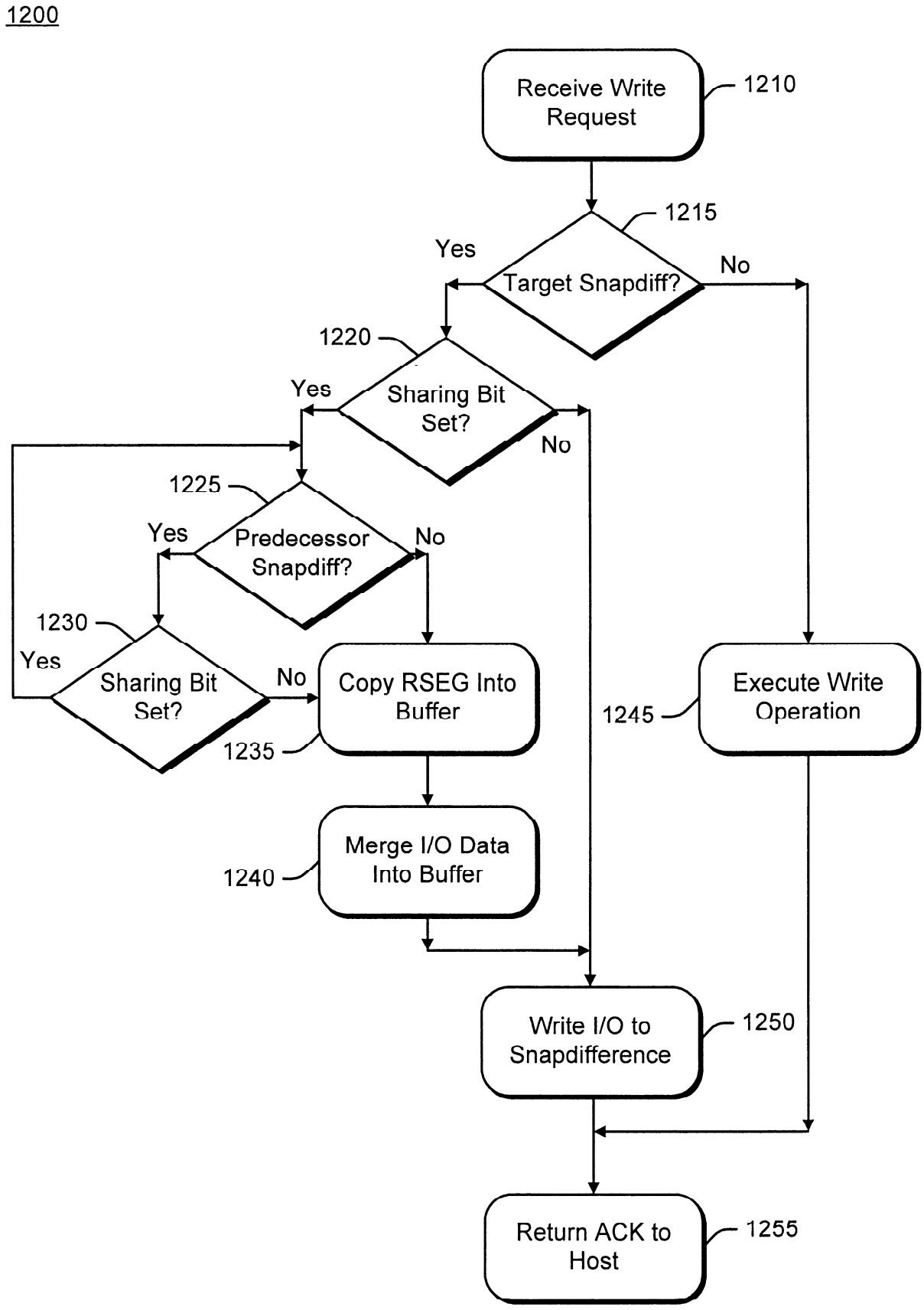
1200
Receive Write Request
1210
1215
Target Snapdiff?
Yes
No
1220
Sharing Bit Set?
Yes
No
1225
Predecessor Snapdiff?
Yes
No
1230
Sharing Bit Set?
Yes
No
Copy RSEG Into Buffer
1235
Merge I/O Data Into Buffer
1240
Execute Write Operation
1245
Write I/O to Snapdifference
1250
Return ACK to Host
1255

Fig. 12

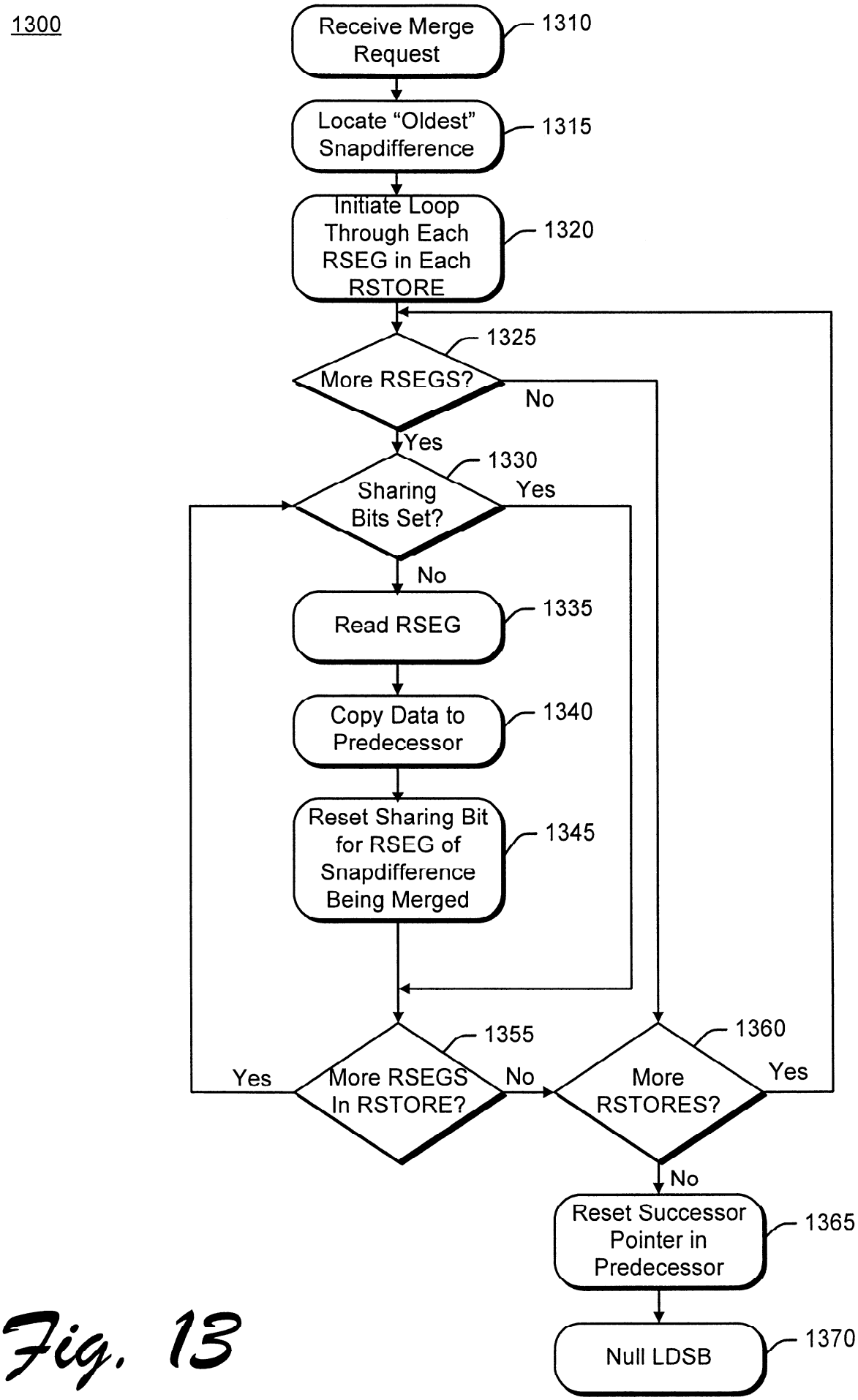
1300
Receive Merge Request
1310
Locate "Oldest" Snapdifference
1315
Initiate Loop Through Each RSEG in Each RSTORE
1320
More RSEGS?
1325
No
Yes
Sharing Bits Set?
1330
Yes
No
Read RSEG
1335
Copy Data to Predecessor
1340
Reset Sharing Bit for RSEG of Snapdifference Being Merged
1345
More RSEGS In RSTORE?
1355
Yes
No
More RSTORES?
1360
Yes
No
Reset Successor Pointer in Predecessor
1365
Null LDSB
1370

Fig. 13

1400

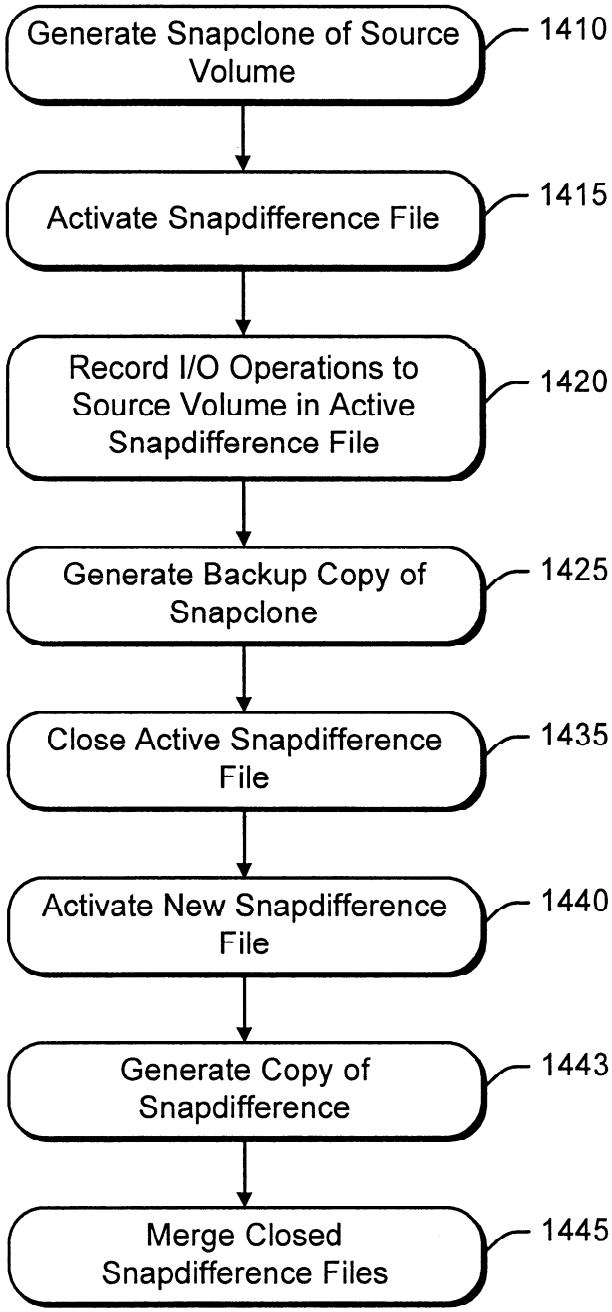
Generate Snapclone of Source Volume
1410
Activate Snapdifference File
1415
Record I/O Operations to Source Volume in Active Snapdifference File
1420
Generate Backup Copy of Snapclone
1425
Close Active Snapdifference File
1435
Activate New Snapdifference File
1440
Generate Copy of Snapdifference
1443
Merge Closed Snapdifference Files
1445

Fig. 14

1500

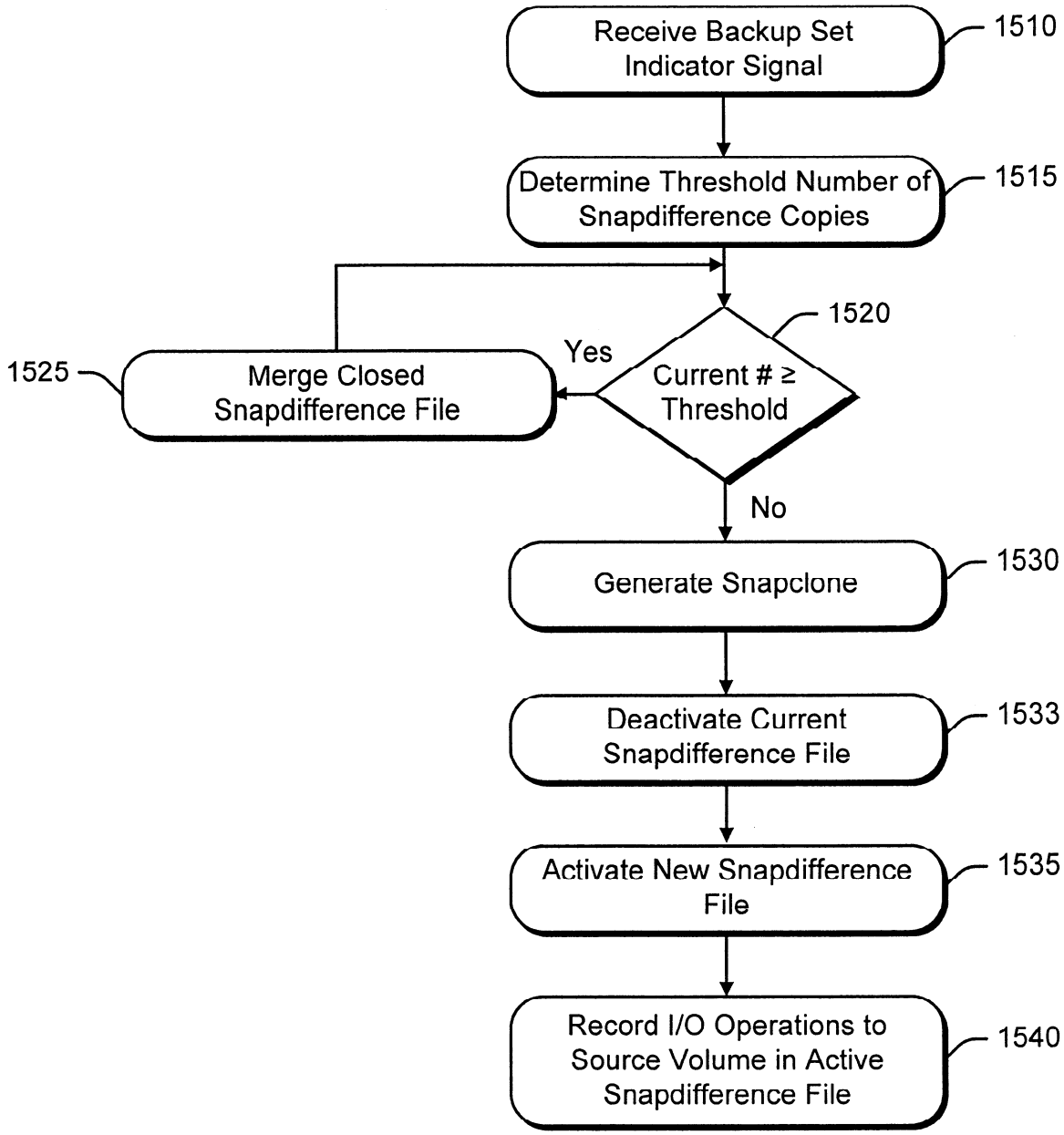
Receive Backup Set Indicator Signal
1510
Determine Threshold Number of Snapdifference Copies
1515
1520
Current # ≥ Threshold
Yes
1525
Merge Closed Snapdifference File
No
Generate Snapclone
1530
Deactivate Current Snapdifference File
1533
Activate New Snapdifference File
1535
Record I/O Operations to Source Volume in Active Snapdifference File
1540

Fig. 15